AGENDA
Mobile City Council

Auditorium
Government Plaza
205 Government Street
Mobile, AL 36644

Tuesday, July 7, 2026, 10:30 AM

1. **CALL TO ORDER**

2. **INVOCATION**

   Pastor Tony Legear, Public Safety Chaplain

3. **PLEDGE OF ALLEGIANCE**

4. **ROLL CALL**

5. **STATEMENT OF RULES BY COUNCIL PRESIDENT**

6. **APPROVAL OF MINUTES**

   June 23 and 30, 2026

7. **COMMUNICATIONS FROM THE MAYOR**

8. **ADOPTION OF THE AGENDA**

9. **APPEALS**

   Request of Javoris Pettway for a waiver of the Noise Ordinance at 2301 Airport Boulevard on July 18, 2026, from 6:00 p.m. - 10:00 p.m. (District 2).

Request of Blacklawn Street Association for a waiver of the Noise Ordinance on Blacklawn Street on October 10, 2026, from 6:00 p.m. - 10:00 p.m. (District 2).

10. PUBLIC HEARINGS

Public hearing to fix costs for demolition of structure at 1966 Halls Mill Road; $3,400.00 (District 2).

Public hearing to fix costs for demolition/debris removal of structure at 1401 Vega Drive; $4,300.00 (District 4).

11. PRESENTATION OF PETITIONS AND OTHER COMMUNICATIONS TO THE COUNCIL

Melvin Jones - to request funding from the Council for the field rental of Sage Park from July to December for the ACCEL Academy Football program.

Jasmin Jasper - provide information about the Anesha Baker Movement regarding community safety.

Reggie Hill - request various investigations, Rules, economic development, and public safety.

12. CONSENT RESOLUTIONS HELD OVER

31-714 Authorize the Mayor to apply, accept, and receive a grant from the U. S. Department of Housing and Urban Development for the Policy Development and Research Program's Automated Permitting Systems Demonstration Grant; $600,000.00 (no local match) (sponsored by Mayor Cheriogotis) (submitted by Ricardo Woods, City Attorney).

13. RESOLUTIONS HELD OVER

01-707 Authorize agreement with CSX Transportation, Inc., for Shipyard Road Boat Launch (sponsored by Mayor Cheriogotis and Councilmember Reynolds) (submitted by John Forrester, Engineering Dept.).

08-708 Approve purchase order to North American Fire Equipment Company Inc., for Holmatro trench rescue equipment for MFRD; $108,573.00 (sponsored by Mayor Cheriogotis) (submitted by Jonn Paine, Purchasing Dept.).

08-709 Approve purchase order to North American Fire Equipment Company Inc., for Holmatro rescue equipment for MFRD: $119,994.00 (sponsored by Mayor

Cheriogotis) (submitted by John Paine, Purchasing Dept.).

08-710 Approve purchase order to Dell Marketing LP for 50 Dell desktop computers for MPD; $78,716.50 (sponsored by Mayor Cheriogotis) (submitted by John Paine, Purchasing Dept.).

14. CONSENT RESOLUTIONS BEING INTRODUCED

09-715 Transfer funds from District 3 Discretionary Account to Account #40678625 for Oakdale Community Clean-Up and Unity Day Mailout; $993.82 (sponsored by Councilmember Small) (submitted by Logan Gewin, Finance Dept.).

37-716 Recommend approval to the ABC Board for issuance of a Retail Beer/Table Wine (Off Premises Only) License to Lois Grocery and Market; 564 Plum Street (sponsored by Councilmember Ingram).

37-717 Recommend approval to the ABC Board for issuance of a Retail Beer/Table Wine (Off Premises Only) License to The Peoples Room; 78 Saint Francis Street (sponsored by Councilmember Ingram).

37-718 Recommend approval to the ABC Board for issuance of a Special Events Retail Liquor License to Inflatable Night Grown Up Addition; 1711 Hillcrest Rd. (sponsored by Councilmember Woods).

40-719 Fix costs for demolition of the structure at 1966 Halls Mill Road (sponsored by Councilmember Ingram).

40-720 Fix costs for demolition/debris removal of structure at 1401 Vega Drive (sponsored by Councilmember Reynolds).

60-721 Determine an appropriation to Next Level Moxie serves a public purpose and approve payment (sponsored by Councilmember Penn) (submitted by Logan Gewin, Finance Dept.).

60-722 Determine an appropriation to Opportunity for Entertainers serves a public purpose and approve payment (sponsored by Councilmember Penn) (submitted by Logan Gewin, Finance Dept.).

60-723 Determine an appropriation to Mobile Christian School serves a public purpose and approve payment (sponsored by Councilmember Fleming) (submitted by Logan Gewin, Finance Dept.).

60-724 Determine an appropriation to Sickle Cell Disease Association of America, Inc. serves a public purpose and approve payment (sponsored by Councilmember Fleming) (submitted by Logan Gewin, Finance Dept.).

60-725 Determine an appropriation to Forest Hill Elementary serves a public purpose and approve payment (sponsored by Councilmember Gregory) (submitted by Logan Gewin, Finance Dept.).

60-726 Determine an appropriation to John Will Elementary School serves a public purpose and approve payment (sponsored by Councilmember Gregory) (submitted by Logan Gewin, Finance Dept.).

60-727 Determine an appropriation to Orchard School serves a public purpose and approve payment (sponsored by Councilmember Gregory) (submitted by Logan Gewin, Finance Dept.).

60-728 Determine an appropriation to Mobile Arts Council, Inc., serves a public purpose and approve payment (sponsored by Mayor Cheriogotis) (submitted by Donna Bryars, Finance Dept.).

15. RESOLUTIONS BEING INTRODUCED

08-729 Approve purchase order to Cowin Equipment Co., Inc., for compact track loader for Stormwater Department; $95,660.80 (sponsored by Mayor Cheriogotis) (submitted by John Paine, Purchasing Department).

08-730 Approve purchase order to Graybar Electric Co., Inc., for decorative aluminum light poles with cross-arms and light fixtures for Traffic Engineering; $20,336.30 (sponsored by Mayor Cheriogotis) (submitted by John Paine, Purchasing Department).

08-731 Approve purchase order to Muse Software Inc., for subscription and implementation fee for Muse point-of-sale software for Maritime Museum; $20,000.00 (sponsored by Mayor Cheriogotis) (submitted by John Paine, Purchasing Department).

08-732 Approve purchase order to Peach State Truck Centers LLC, for a crew cab truck with a 26-foot Morgan Dry Van body for MFRD USAR; $276,674.00 (sponsored by Mayor Cheriogotis) (submitted by John Paine, Purchasing Department).

08-733 Approve purchase order to Research Electronics International LLC, for enhanced spectrum analyzer for detection of hidden electronic devices for Gulf Coast

Technology Center; $15,500.00 (sponsored by Mayor Cheriogotis) (submitted by John Paine, Purchasing Department).

08-734 Approve purchase order to Sansom Equipment Co., Inc., for garbage truck with yard automated side-load body for Trash Department; $398,360.00 (sponsored by Mayor Cheriogotis) (submitted by John Paine, Purchasing Department).

08-735 Approve purchase order to Symtech Fire LLC, for one fixed cargo container flashover simulation for MFRD; $108,332.00 (sponsored by Mayor Cheriogotis) (submitted by John Paine, Purchasing Department).

08-736 Approve purchase order to Ward International Trucks LLC, for two freightliner crew cab trucks with dump bodies for Stormwater Department; $253,222.00 (sponsored by Mayor Cheriogotis) (submitted by John Paine, Purchasing Department).

21-737 Authorize Contract with Bill Smith Electric, Inc. for lighting assemblies upgrades at Trimmier Park, $288,175.00. (sponsored by Councilmember C.J. Small and Mayor Cheriogotis) (submitted by Carleen Stout-Clark, REAM Dept.).

21-738 Authorize Contract with Chris Brewer Construction, Inc. for 2026 Public Services Storm Drainage Repair & Maintenance; $1,432,149.36 (sponsored by Mayor Cheriogotis) (submitted by Matt Anderson, Public Services Dept.).

21-739 Authorize Contract with Finn Partners, Inc. for marketing of Son of a Son of a Sailor Exhibition; $90,000.00 (sponsored by Mayor Cheriogotis) (submitted by Karen Poth, Maritime Museum).

21-740 Authorize Professional Services Contract with MGT Impact Solutions, LLC for comprehensive cost of services study for development related user fees within Build Mobile; NTE $60,490.00 (sponsored by Mayor Cheriogotis) (submitted by Shayla Beaco, Build Mobile).

60-741 Authorize Settlement Agreement and Mutual Release with Chris Brewer Contracting, Inc. (sponsored by Mayor Cheriogotis) (submitted by Ricardo Woods, City Attorney).

16. ANNOUNCEMENTS

R E S O L U T I O N

Sponsored by: Mayor Spiro N. Cheriogotis

BE IT RESOLVED BY THE CITY COUNCIL OF THE CITY OF MOBILE, ALABAMA, that the Mayor is authorized to apply, accept and receive from the US Department of Housing and Urban Development grant assistance in the amount up to $600,000 in support of the Policy Development and Research Program's Automated Permitting Systems Demonstration grant opportunity. No match is required for this program.

BE IT FURTHER RESOLVED that the Mayor or his designee be authorized to accept said grant if offered and to sign any agreements or other documents in connection with the grant application and to provide any information required by the Department of Housing and Urban Development. Any agreements for grant assistance, together with the exhibits, shall be filed with the City Clerk after award and execution.

Adopted:

_____

City Clerk

CAPITAL CONTRACT SUMMARY SHEET

AGENDA ITEM SUMMARY SHEET

Agenda of: July 7, 2026

Submitted by:
John Forrester, City Engineer

Sponsored by:
Benjamin Reynolds, Councilmember
Spiro Cheriogotis, Mayor

Purpose and Scope of Project:
Approve agreement with CSX Transportation, Inc. for construction services.

Amount of Contract:

Funding Source

ATTACHMENTS:
1. 2024-3005-20 Shipyard Road Boat Launch CSXT Agreement (CSX Transportation, Inc.)

REVIEWERS:
Lana Pafenbach
Lana Pafenbach

2026

RESOLUTION

Sponsored by: Mayor Spiro Cheriogotis
Councilman Ben Reynolds

BE IT RESOLVED BY THE CITY COUNCIL OF MOBILE, ALABAMA,

that the Mayor and the City Clerk be, and they hereby are, authorized and directed to execute and attest, respectively, for and on behalf of the City of Mobile, an agreement, by and between the City of Mobile and the company listed below, for work as outlined in the agreement attached hereto. A copy of said executed agreement will be on file in the office of the City Clerk.

Name of Company: CSX Transportation, Inc.

Project Name: Shipyard Road Boat Launch (CSXT Agreement)
COM Project# 2024-3005-20

Adopted:

_____
City Clerk

CONSTRUCTION AGREEMENT

This Construction Agreement ("**Agreement**") is made as of _____, 20____, by and between CSX TRANSPORTATION, INC., a Virginia corporation with its principal place of business in Jacksonville, Florida ("**CSXT**"), and CITY OF MOBILE, a body corporate and political subdivision of the State of Alabama ("Agency").

EXPLANATORY STATEMENT

1. Agency has proposed to construct, or to cause to be constructed, replacing the existing asphalt and rubber crossing surface and installation of active crossing warning devices to accommodate the proposed boat ramp and roadway improvements on Shipyard Road impacting crossing with Department of Transportation Crossing Inventory Number 351455Y, CSX Contract Number CSX1030824, Railroad Milepost Number 000 675.42, within the Atlanta Division, NO&M Subdivision, in Mobile, Mobile County, Alabama (the "**Project**").

2. Agency has obtained, or will obtain, all authorizations, permits and approvals from all local, state and federal agencies (including Agency), and their respective governing bodies and regulatory agencies, necessary to proceed with the Project and to appropriate all funds necessary to construct the Project.

3. Agency acknowledges that: (i) by entering into this Agreement, CSXT will provide services and accommodations to promote public interest in this Project, without profit or other economic inducement typical of other Agency contractors; (ii) neither CSXT nor its affiliates (including their respective directors, officers, employees or agents) will incur any costs, expenses, losses or liabilities in excess of payments made to CSXT, by or on behalf of Agency or its contractors, pursuant to this Agreement; and (iii) CSXT retains the paramount right to regulate all activities affecting its property and operations.

4. It is the purpose of this Agreement to provide for the terms and conditions upon which the Project may proceed.

NOW, THEREFORE, in consideration of the foregoing Explanatory Statement and other good and valuable consideration, the receipt and sufficiency of which are acknowledged by the parties, the parties agree as follows:

1. Project Plans and Specifications

   1.1 Preparation and Approval. Pursuant to Exhibit A of this Agreement, all plans, specifications, drawings and other documents necessary or appropriate to the design and construction of the Project shall be prepared, at Agency's sole cost and expense, by Agency or CSXT or their respective contractors. Project plans, specifications and drawings prepared by or on behalf of Agency shall be subject, at CSXT's election, to

the review and approval of CSXT. Such plans, specifications and drawings, as prepared or approved by CSXT, are referred to as the "**Plans**", and shall be incorporated and deemed a part of this Agreement. Plans prepared or submitted to and approved by CSXT as of the date of this Agreement are set forth in Exhibit B to this Agreement.

1.2 Effect of CSXT Approval or Preparation of Plans. By its review, approval or preparation of Plans pursuant to this Agreement, CSXT signifies only that such Plans and improvements constructed in accordance with such Plans satisfy CSXT's requirements. CSXT expressly disclaims all other representations and warranties in connection with the Plans, including, but not limited to, the integrity, suitability or fitness for the purposes of Agency or any other persons of the Plans or improvements constructed in accordance with the Plans.

1.3 Compliance with Plans. The Project shall be constructed in accordance with the Plans.

2. Allocation and Conduct of Work

Work in connection with the Project shall be allocated and conducted as follows:

2.1 CSXT Work. Subject to timely payment of Reimbursable Expenses as provided by Section 4, CSXT shall provide, or cause to be provided, the services as set forth by Exhibit A to this Agreement. Agency agrees that CSXT shall provide all services that CSXT deems necessary or appropriate (whether or not specified by Exhibit A) to preserve and maintain its property and operations, without impairment or exposure to liability of any kind and in compliance with all applicable federal, state and local regulations and CSXT's contractual obligations, including, but not limited to, CSXT's existing or proposed third party agreements and collective bargaining agreements.

2.2 Agency Work. Agency shall perform, or cause to be performed, all work as set forth by Exhibit A, at Agency's sole cost and expense.

2.3 Conduct of Work. CSXT shall commence its work under this Agreement following: (i) delivery to CSXT of a notice to proceed from Agency; (ii) payment of Reimbursable Expenses (as provided by Section 4.1) as required by CSXT prior to the commencement of work by CSXT; (iii) issuance of all permits, approvals and authorizations necessary or appropriate for such work; and (iv) delivery of proof of insurance acceptable to CSXT, as required by Section 9. The initiation of any services by CSXT pursuant to this Agreement, including, but not limited to, the issuance of purchase orders or bids for materials or services, shall constitute commencement of work for the purposes of this Section. The parties intend that all work by CSXT or on CSXT property shall conclude no later than **May 31, 2027**, unless the parties mutually agree to extend such date.

3. Special Provisions. Agency shall observe and abide by, and shall require its contractors ("**Contractors**") to observe and abide by the terms, conditions and provisions set forth in Exhibit C to this Agreement (the "Special Provisions"). To the extent that Agency performs Project work itself, Agency shall be deemed a Contractor for purposes of this Agreement. Agency further agrees that, prior to the commencement of Project work by any third party Contractor, such Contractor shall execute and deliver to CSXT Schedule I to this Agreement to acknowledge Contractor's agreement to observe and abide by the terms and conditions of this Agreement.

4. Cost of Project and Reimbursement Procedures

4.1 Reimbursable Expenses. Agency shall reimburse CSXT for all costs and expenses incurred by CSXT in connection with the Project, including, without limitation: (1) all out of pocket expenses, (2) travel and lodging expenses, (3) telephone, facsimile, and mailing expenses, (4) costs for equipment, tools, materials and supplies, (5) sums paid to CSXT's consultants and subcontractors, and (6) CSXT labor in connection with the Project, together with CSXT labor overhead percentages established by CSXT pursuant to applicable law (collectively, "**Reimbursable Expenses**"). Reimbursable Expenses shall also include expenses incurred by CSXT prior to the date of this Agreement to the extent identified by the Estimate provided pursuant to Section 4.2.

4.2 Estimate. CSXT has estimated the total Reimbursable Expenses for the Project as shown on Exhibit D (the "**Estimate**", as amended or revised). In the event CSXT anticipates that actual Reimbursable Expenses for the Project may exceed such Estimate, it shall provide Agency with the revised Estimate of the total Reimbursable Expenses, together with a revised Payment Schedule (as defined by Section 4.3.1), for Agency's approval and confirmation that sufficient funds have been appropriated to cover the total Reimbursable Expenses of such revised Estimate. CSXT may elect, by delivery of notice to Agency, to immediately cease all further work on the Project, unless and until Agency provides such approval and confirmation. Furthermore, the Agency acknowledges and understands that any estimated cost to construct the project shall only be good for a limited period of time and that any delays to move to construction, if CSXT agrees to such construction, shall result in increased costs.

4.3 Payment Terms.

4.3.1 Agency shall pay CSXT for Reimbursable Expenses in the amounts and on the dates set forth in the Payment Schedule as shown on Exhibit E (the "Payment Schedule", as revised pursuant to Section 4.2). CSXT agrees to submit invoices to Agency for such amounts and Agency shall remit payment to CSXT at the later of thirty (30) days following delivery of each such invoice to Agency or, the payment date (if any) set forth in the Payment Schedule.

4.3.2 Following completion of the Project, CSXT shall submit to Agency a final invoice that reconciles the total Reimbursable Expenses incurred by CSXT against the total payments received from Agency. Agency shall pay to CSXT the amount by which Reimbursable Expenses exceed total payments as shown by the final invoice, within thirty (30) days following delivery of such invoice to Agency. In the event that the payments received by CSXT from Agency exceed the Reimbursable Expenses, CSXT shall remit such excess to Agency.

4.3.3 In the event that Agency fails to pay CSXT any sums due CSXT under this Agreement: (i) Agency shall pay CSXT interest at the lesser of 1.0% per month or the maximum rate of interest permitted by applicable law on the delinquent amount until paid in full; and (ii) CSXT may elect, by delivery of notice to Agency: (A) to immediately cease all further work on the Project, unless and until Agency pays the entire delinquent sum, together with accrued interest; and/or (B) to terminate this Agreement.

4.3.4 All invoices from CSXT shall be delivered to Agency in accordance with Section 16 of this Agreement. All payments by Agency to CSXT shall be made by certified check and mailed to the following address or such other address as designated by CSXT's notice to Agency:

CSX Transportation, Inc.
P.O. Box 530192
Atlanta, GA 30353-0192

4.4 Effect of Termination. Agency's obligation to pay to CSXT Reimbursable Expenses in accordance with Section 4 shall survive termination of this Agreement for any reason.

5. Appropriations Agency represents to CSXT that: (i) Agency has appropriated funds sufficient to reimburse CSXT for the Reimbursable Expenses encompassed by the Estimate attached as Exhibit D; (ii) Agency shall use its best efforts to obtain appropriations necessary to cover Reimbursable Expenses encompassed by subsequent Estimates approved by Agency; and (iii) Agency shall promptly notify CSXT in the event that Agency is unable to obtain such appropriations.

6. Easements and Licenses

6.1 Agency Obligation. Agency shall acquire all necessary licenses, permits and easements required for the Project.

6.2 Temporary Construction Licenses. Insofar as it has the right to do so, CSXT hereby grants Agency a nonexclusive license to access and cross CSXT's property, to the extent necessary for the construction of the Project (excluding ingress or egress over public grade crossings), along such routes and upon such terms as may be defined and

imposed by CSXT and such temporary construction easements as may be designated on the Plans approved by CSXT.

6.3 Temporary Construction Easements. CSXT may grant without warranty to Agency, if required, a temporary non-exclusive easement for access to the extent necessary for the project on terms and conditions and at a price acceptable to the parties.

6.4 Maintenance Agreement. Contemporaneous with the execution of this Agreement, CSXT and Agency have executed that certain Maintenance Agreement providing for Agency's ongoing use, maintenance, repair, renewal and removal of the Project.

6.5 Permanent Easements. Insofar as it has the right to do so, CSXT shall grant, without warranty to Agency, easements for the use and maintenance (in accordance with the provisions of the Maintenance Agreement described in 6.4) of the Project wholly or partly on CSXT property as shown on the Plans approved by CSXT, if any, on terms and conditions and at a price acceptable to both parties. Upon request by CSXT, Agency shall furnish to CSXT descriptions and plat plans for the easements.

7. Permits At its sole cost and expense, Agency shall procure all permits and approvals required by any federal, state, or local governments or governmental agencies for the construction, maintenance and use of the Project, copies of which shall be provided to CSXT.

8. Termination

8.1 By Agency. For any reason, Agency may, as its sole remedy, terminate this Agreement by delivery of notice to CSXT. Agency shall not be entitled to otherwise pursue claims for consequential, direct, indirect or incidental damages or lost profits as a consequence of CSXT's default or termination of this Agreement or Work on the Project by either party.

8.2 By CSXT. In addition to the other rights and remedies available to CSXT under this Agreement, CSXT may terminate this Agreement by delivery of notice to Agency in the event Agency or its Contractors fail to observe the terms or conditions of this Agreement and such failure continues more than ten (10) business days following delivery of notice of such failure by CSXT to Agency.

8.3 Consequences of Termination. If the Agreement is terminated by either party pursuant to this Section or any other provision of this Agreement, the parties understand that it may be impractical for them to immediately stop the Work. Accordingly, they agree that, in such instance a party may continue to perform Work until it has reached a point where it may reasonably and safely suspend the Work. Agency shall reimburse CSXT pursuant to this Agreement for the Work performed, plus all costs reasonably incurred by CSXT to discontinue the Work and protect the Work upon full suspension of the same, the cost of returning CSXT's property to its former condition, and all other costs

of CSXT incurred as a result of the Project up to the time of full suspension of the Work. Termination of this Agreement or Work on the Project, for any reason, shall not diminish or reduce Agency's obligation to pay CSXT for Reimbursable Expenses incurred in accordance with this Agreement. In the event of the termination of this Agreement or the Work for any reason, CSXT's only remaining obligation to Agency shall be to refund to Agency payments made to CSXT in excess of Reimbursable Expenses in accordance with Section 4.

9. Insurance In addition to the insurance that Agency requires of its Contractor, Agency shall require all of its Contractors performing work near the Project area to purchase and maintain insurance in compliance with CSXT's insurance requirements attached to this Agreement as Exhibit F. Neither Agency nor Contractor shall commence work on the Project until such policy or policies have been submitted to and approved by CSXT's Risk Management Department.

10. Ownership and Maintenance

10.1 By Agency. Agency shall maintain and repair, at its sole cost and expense, all parts comprising the permanent aspects of the Project, as shown by the Plans, consisting of roadway pavement up to the outer ends of the railroad cross ties, sidewalks, guardrails, and curbs, in good and safe condition to CSXT's satisfaction. In the event Agency fails to do so after reasonable notice from CSXT (unless an emergency condition exists or is imminent in the opinion of CSXT that requires immediate action), CSXT may perform such maintenance and repair, at Agency's sole cost and expense.

10.2 By CSXT. CSXT shall maintain and repair the crossing surface between the ends of its cross ties and its signal facilities at the crossing, at Agency's sole cost and expense.

10.3 Alterations. Agency shall not undertake any alteration, modification or expansion of the Project, without the prior written approval of CSXT, which may be withheld for any reason, and the execution of such agreements as CSXT may require. CSXT may undertake alterations of its property, track or facilities and shall be reimbursed by Agency for the expenses incurred by CSXT with respect to the removal and restoration of the crossing in connections with such alteration.

11. Indemnification

11.1 Generally. To the maximum extent permitted by applicable law, Agency and its Contractors shall indemnify, defend, and hold CSXT and its affiliates harmless from and against all claims, demands, payments, suits, actions, judgments, settlements, and damages of every nature, degree, and kind (including direct, indirect, consequential, incidental, and punitive damages), for any injury to or death to any person(s) (including, but not limited to the employees of CSXT, its affiliates, Agency or its Contractors), for the loss of or damage to any property whatsoever (including but not

limited to property owned by or in the care, custody, or control of CSXT, its affiliates, Agency or its Contractors, and environmental damages and any related remediation brought or recovered against CSXT and its affiliates), arising directly or indirectly from the negligence, recklessness or intentional wrongful misconduct of the Contractors, Agency, and their respective agents, employees, invitees, contractors, or its contractors' agents, employees or invitees in the performance of work in connection with the Project or activities incidental thereto, or from their presence on or about CSXT's property. The foregoing indemnification obligation shall not be limited to the insurance coverage required by this Agreement, except to the extent required by law or otherwise expressly provided by this Agreement. Nothing contained in this agreement shall be deemed to constitute, either as to the contractor or as to third parties, a waiver of any statutory damages caps set forth in Sections 11-47-190 and 11-93-2, Code of Alabama (1975), as the same may be amended from time to time, and in any other statutes and case law otherwise available to the Agency.

11.2 Compliance with Laws. Agency shall comply, and shall require its Contractors to comply, with any federal, state, or local laws, statutes, codes, ordinances, rules, and regulations applicable to its construction and maintenance of the Project. Agency's Contractors shall indemnify, defend, and hold CSXT and its affiliates harmless with respect to any fines, penalties, liabilities, or other consequences arising from breaches of this Section.

11.3 "CSXT Affiliates". For the purpose of this Section 11, CSXT's affiliates include CSX Corporation and all entities, directly or indirectly, owned or controlled by or under common control of CSXT or CSX Corporation and their respective officers, directors, employees and agents.

11.4 Notice of Incidents. Agency and its Contractor shall notify CSXT promptly of any loss, damage, injury or death arising out of or in connection with the Project work.

11.5 Survival. The provisions of this Section 11 shall survive the termination or expiration of this Agreement.

12. Independent Contractor The parties agree that neither Agency nor its Contractors shall be deemed either agents or independent contractors of CSXT. Except as otherwise provided by this Agreement, CSXT shall exercise no control whatsoever over the employment, discharge, compensation of, or services rendered by Agency or Agency's Contractors, or the construction practices, procedures, and professional judgment employed by Agency or its Contractor to complete the Project. Notwithstanding the foregoing, this Section 12 shall in no way affect the absolute authority of CSXT to prohibit Agency or its Contractors or anyone from entering CSXT's property, or to require the removal of any person from its property, if it determines, in its sole discretion, that such person is not acting in a safe manner or that actual or potential hazards in, on or about the Project exist.

13. "Entire Agreement" This Agreement embodies the entire understanding of the parties, may not be waived or modified except in a writing signed by authorized representatives of both parties, and supersedes all prior or contemporaneous written or oral understandings, agreements or negotiations regarding its subject matter. In the event of any inconsistency between this Agreement and the Exhibits, the more specific terms of the Exhibits shall be deemed controlling.

14. Waiver If either party fails to enforce its respective rights under this Agreement, or fails to insist upon the performance of the other party's obligations hereunder, such failure shall not be construed as a permanent waiver of any rights or obligations in this Agreement.

15. Assignment CSXT may assign this Agreement and all rights and obligations herein to a successor in interest, parent company, affiliate, or future affiliate. Upon assignment of this Agreement by CSXT and the assumption of CSXT's assignee of CSXT's obligations under this Agreement, CSXT shall have no further obligation under this Agreement. Agency shall not assign its rights or obligations under this Agreement without CSXT's prior consent, which consent may be withheld for any reason.

16. Notices All notices, consents and approvals required or permitted by this Agreement shall be in writing and shall be deemed delivered upon personal delivery, upon the expiration of three (3) days following mailing by first class U.S. mail, or upon the next business day following mailing by a nationally recognized overnight carrier, to the parties at the addresses set forth below, or such other addresses as either party may designate by delivery of prior notice to the other party:

If to CSXT:	CSX Transportation, Inc. 500 Water Street, J-301 Jacksonville, Florida 32202 Attention: Director Project Management – Public Projects
If to Agency:	City of Mobile, Alabama Post Office Box 1827 Mobile, Alabama 36633 Attention: Nicholas Amberger, PE Director of Engineering and Infrastructure

17. Severability The parties agree that if any part, term or provision of this Agreement is held to be illegal, unenforceable or in conflict with any applicable federal, state, or local law or regulation, such part, term or provision shall be severable, with the remainder of the Agreement remaining valid and enforceable.

18. Applicable Law This Agreement shall be governed by the laws of the State of Alabama, exclusive of its choice of law rules. The parties further agree that the venue of all legal and equitable proceedings related to disputes under this Agreement shall be situated in Mobile

County, Alabama, and the parties agree to submit to the personal jurisdiction of any State or Federal court situated in Mobile, Alabama.

19. Non-Discrimination. Contractor shall comply with all Federal, State and local laws concerning nondiscrimination, including but not limited to City of Mobile Ordinance No. 14-034 which requires, inter alia, that all contractors performing work for the City of Mobile not discriminate on the basis of race, creed, color, national origin or disability, require that all subcontractors they engage do the same, and make every reasonable effort to assure that fifteen percent of the work performed under contract be awarded to socially and economically disadvantaged individuals and business entities."

20. Immigration Clause. By signing this contract, the contracting parties affirm, for the duration of the agreement, that they will not violate federal immigration law or knowingly employ, hire for employment, or continue to employ an unauthorized alien within the state of Alabama, and attach a copy showing registration in the E Verify program.

21. Anti-Boycott Clause. Contractor agrees and represents that it is not currently engaged in, nor will it engage in, any boycott of a person or entity based in or doing business with a jurisdiction with which the State of Alabama can enjoy open trade.

REMAINDER OF THE PAGE LEFT INTENTIONALLY BLANK

BY SIGNING THIS AGREEMENT, I certify that there have been no changes made to the content of this Agreement since its approval by the CSXT Legal Department on **June 12, 2026.**

IN WITNESS WHEREOF, the parties have caused this Agreement to be executed in duplicate, each by its duly authorized officers, as of the date of this Agreement.

CITY OF MOBILE, ALABAMA

By:_____

Name:_____

Title:_____

CSX TRANSPORTATION, INC.

By:_____
Edward D. Sparks II, PE
Chief Engineer – Bridges, Design & Construction

EXHIBIT A

ALLOCATION OF WORK

Subject to Section 2.1, work to be performed in connection with the Project is allocated as follows:

A. Agency shall let by contract to its Contractors:

1. Construction of all components as depicted in the plans under Exhibit B within the Agreement and includes but is not limited to all items listed under this section (Exhibit A, Section A) on the Agreement.
2. Demolition and removal of existing gravel "Private" roadway including bituminous concrete (asphalt) crossing surface at crossing with Department of Transportation Crossing Inventory Number 351455Y, CSX Contract Number CSX1030824, Railroad Milepost Number 000 675.42.
3. Construction of new twenty-two foot (22'-0") wide bituminous concrete (asphalt) roadway, "Shipyard Road", through the CSXT right of way and tracks, with a roadway configuration of two (2) eleven-foot (11'-0") lanes.
4. Perform all asphalt work including construction of roadway crushed aggregate base, bituminous treatment, and Superpave bituminous concrete (asphalt).
5. Correct the roadway profile to meet CSXT Standard MWI 2521 having the new roadway profile at the same plane as the crossing surface within two feet (2'-0") outside the rails and having the roadway approaches not more than three inches (3") higher or lower than top of nearest rail at a point thirty feet (30-0") from rail, unless track superelevation dictates.
6. Perform all grading and sodding to accommodate new paved roadway of Shipyard Road within and through the CSXT right of way.
7. Paving up to and in between the rails and both sides of the crossing at Shipyard Road with Department of Transportation Crossing Inventory Number 351455Y, CSX Contract Number CSX1030824, Railroad Milepost Number 000 675.42.
8. Placement of all necessary signing and pavement markings.
9. Placement of erosion control devices as shown in the approved plans.
10. Restore the CSXT right of way to a condition acceptable to CSXT, or CSXT Representative.
11. Remove all rubbish and debris from the project site.

12. All roadway work is to be done in accordance with Alabama Department of Transportation Standard Specifications for Highway Construction 2018 and 2026 Editions, and CSXT MWI 2521 for Normal and Light Duty Road Crossing – Asphalt and Rubber Interface on Wood Ties.

B. CSXT shall perform or cause to be performed:

1. Preliminary engineering services.
2. Changes in communication and signal lines.
3. Flagging services and other protective services and devices as may be necessary.
4. Construction engineering and inspection to protect the interests of CSXT.
5. Construction and installation of rail, crossties, ballast, on-track materials, and other rail-related components to accommodate a new crossing surface at Shipyard Road with Department of Transportation Crossing Inventory Number 351455Y, CSX Contract Number CSX1030824, Railroad Milepost Number 000 675.42.
6. Construction and installation of two (2) flashing lights and gates, six-foot by six-foot (6'-0" x 6'-0") circuit house, train detection unit, and AC meter service in accordance with CSXT SS220 at Shipyard Road with Department of Transportation Crossing Inventory Number 351455Y, CSX Contract Number CSX1030824, Railroad Milepost Number 000 675.42.
7. Construction and installation of a remote six-foot by six-foot (6'-0" x 6'-0") DAX circuit house with train detection unit at the switch located at Railroad Milepost Number 000 675.80.
8. Removal and disposal of railroad related waste materials; clean up of the work site at Shipyard Road with Department of Transportation Crossing Inventory Number 351455Y, CSX Contract Number CSX1030824, Railroad Milepost Number 000 675.42.
9. Any other services, equipment, and components deemed necessary to place railroad crossing in service in a safe and efficient manner.
10. All rail work performed by CSXT to be in accordance with CSXT MWI Standards.

REMAINDER OF THE PAGE LEFT INTENTIONALLY BLANK

EXHIBIT B

PLANS AND SPECIFICATIONS

Plans, Specifications and Drawings:

As of the date of this Agreement, the following plans, specifications and drawings have been submitted by Agency to CSXT for its review and approval:

SHEET	DESCRIPTION	PREPARER	DATE
1	Title Sheet	McCrory Williams, Inc.	04/30/26
1A	Index to Sheets	McCrory Williams, Inc.	04/30/26
1B	Index to Sheets – Special & Std Drawings	McCrory Williams, Inc.	04/30/26
1C	Plans Legend Sheet	McCrory Williams, Inc.	04/30/26
1D	Plan Abbreviations Sheet	McCrory Williams, Inc.	04/30/26
1E	Existing Site Conditions	McCrory Williams, Inc.	04/30/26
2	Typical Section	McCrory Williams, Inc.	04/30/26
2A – 2G	Construction Details	McCrory Williams, Inc.	04/30/26
2H – 2J	Project Notes	McCrory Williams, Inc.	04/30/26
3	Summary of Quantities	McCrory Williams, Inc.	04/30/26
4	Plan View	McCrory Williams, Inc.	04/30/26
4A	Profile	McCrory Williams, Inc.	04/30/26
5	Plan/Profile – Boat Launch	McCrory Williams, Inc.	04/30/26
6	Plan/Profile – Kayak Launch	McCrory Williams, Inc.	04/30/26
7	Striping & paving Layout Plan	McCrory Williams, Inc.	04/30/26
8	Grading Plan	McCrory Williams, Inc.	04/30/26
9	Drainage Section	McCrory Williams, Inc.	04/30/26
10	Omitted	McCrory Williams, Inc.	04/30/26
11	Erosion Control Plan	McCrory Williams, Inc.	04/30/26
12 - 14	Omitted	McCrory Williams, Inc.	04/30/26
15 - 20	Cross Section	McCrory Williams, Inc.	04/30/26
N/A	Proposed Rail Material Sketch	Benesch	05/05/26
H01	Proposed Crossing Layout	Progress Rail Services	11/20/25

*Plans located at the end of the Agreement.

REMAINDER OF THE PAGE LEFT INTENTIONALLY BLANK

EXHIBIT C

CSXT SPECIAL PROVISIONS

DEFINITIONS:

As used in these Special Provisions, all capitalized terms shall have the meanings ascribed to them by the Agreement, and the following terms shall have the meanings ascribed to them below:

"CSXT" shall mean CSX Transportation, Inc., its successors and assigns.

"CSXT Representative" shall mean the authorized representative of CSX Transportation, Inc.

"Agreement" shall mean the Agreement between CSXT and Agency dated as of _____, as amended from time to time.

"Agency" shall mean the **CITY OF MOBILE, ALABAMA**.

"Agency Representative" shall mean the authorized representative of **CITY OF MOBILE, ALABAMA**.

"Contractor" shall have the meaning ascribed to such term by the Agreement.

"Work" shall mean the Project as described in the Agreement.

I. AUTHORITY OF CSXT ENGINEER

The CSXT Representative shall have final authority in all matters affecting the safe maintenance of CSXT operations and CSXT property, and his or her approval shall be obtained by the Agency or its Contractor for methods of construction to avoid interference with CSXT operations and CSXT property and all other matters contemplated by the Agreement and these Special Provisions.

II. INTERFERENCE WITH CSXT OPERATIONS

A. Agency or its Contractor shall arrange and conduct its work so that there will be no interference with CSXT operations, including train, signal, telephone and telegraphic services, or damage to CSXT's property, or to poles, wires, and other facilities of tenants on CSXT's Property or right-of-way. Agency or its Contractor shall store materials so as to prevent trespassers from causing damage to trains, or CSXT Property. Whenever Work is likely to affect the operations or safety of trains, the method of doing such Work shall first be submitted to the CSXT Representative for approval, but such approval shall not relieve Agency or

its Contractor from liability in connection with such Work.

B. If conditions arising from or in connection with the Project require that immediate and unusual provisions be made to protect train operation or CSXT's property, Agency or its Contractor shall make such provision. If the CSXT Representative determines that such provision is insufficient, CSXT may, at the expense of Agency or its Contractor, require or provide such provision as may be deemed necessary, or cause the Work to cease immediately.

III. NOTICE OF STARTING WORK. Agency or its Contractor shall not commence any work on CSXT Property or rights-of-way until it has complied with the following conditions:

A. Notify CSXT in writing of the date that it intends to commence Work on the Project. Such notice must be received by CSXT at least ten business days in advance of the date Agency or its Contractor proposes to begin Work on CSXT property. The notice must refer to this Agreement by date. If flagging service is required, such notice shall be submitted at least thirty (30) business days in advance of the date scheduled to commence the Work.

B. Obtain authorization from the CSXT Representative to begin Work on CSXT property, such authorization to include an outline of specific conditions with which it must comply.

C. Obtain from CSXT the names, addresses and telephone numbers of CSXT's personnel who must receive notice under provisions in the Agreement. Where more than one individual is designated, the area of responsibility of each shall be specified.

IV. WORK FOR THE BENEFIT OF THE CONTRACTOR

A. No temporary or permanent changes to wire lines or other facilities (other than third party fiber optic cable transmission systems) on CSXT property that are considered necessary to the Work are anticipated or shown on the Plans. If any such changes are, or become, necessary in the opinion of CSXT or Agency, such changes will be covered by appropriate revisions to the Plans and by preparation of a force account estimate. Such force account estimate may be initiated by either CSXT or Agency, but must be approved by both CSXT and Agency. Agency or Contractor shall be responsible for arranging for the relocation of the third party fiber optic cable transmission systems, at no cost or expense to CSXT.

B. Should Agency or Contractor desire any changes in addition to the above, then it shall make separate arrangements with CSXT for such changes to be accomplished at the Agency or Contractor's expense.

V. HAUL ACROSS RAILROAD

A. If Agency or Contractor desires access across CSXT property or tracks at other than an existing and open public road crossing in or incident to construction of the Project, the Agency or Contractor must first obtain the permission of CSXT and shall execute a license agreement or right of entry satisfactory to CSXT, wherein Agency or Contractor agrees to bear all costs and liabilities related to such access.

B. Agency and Contractor shall not cross CSXT's property and tracks with vehicles or equipment of any kind or character, except at such crossing or crossings as may be permitted pursuant to this section.

VI. COOPERATION AND DELAYS

A. Agency or Contractor shall arrange a schedule with CSXT for accomplishing stage construction involving work by CSXT. In arranging its schedule, Agency or Contractor shall ascertain, from CSXT, the lead time required for assembling crews and materials and shall make due allowance therefore.

B. Agency or Contractor may not charge any costs or submit any claims against CSXT for hindrance or delay caused by railroad traffic; work done by CSXT or other delay incident to or necessary for safe maintenance of railroad traffic; or for any delays due to compliance with these Special Provisions.

C. Agency and Contractor shall cooperate with others participating in the construction of the Project to the end that all work may be carried on to the best advantage.

D. Agency and Contractor understand and agree that CSXT does not assume any responsibility for work performed by others in connection the Project. Agency and Contractor further understand and agree that they shall have no claim whatsoever against CSXT for any inconvenience, delay or additional cost incurred by Agency or Contractor on account of operations by others.

VII. STORAGE OF MATERIALS AND EQUIPMENT

Agency and Contractor shall not store their materials or equipment on CSXT's property or where they may potentially interfere with CSXT's operations, unless Agency or Contractor has received CSXT Representative's prior written permission. Agency and Contractor understand and agree that CSXT will not be liable for any damage to such materials and equipment from any cause and that CSXT may move, or require Agency or Contractor to move, such material and equipment at Agency's or Contractor's sole expense. To minimize the possibility of damage to the railroad tracks resulting from the

unauthorized use of equipment, all grading or other construction equipment that is left parked near the tracks unattended by watchmen shall be immobilized to the extent feasible so that it cannot be moved by unauthorized persons.

VIII. CONSTRUCTION PROCEDURES

A. General

1. Construction work on CSXT property shall be subject to CSXT's inspection and approval.
2. Construction work on CSXT property shall be in accord with CSXT's written outline of specific conditions and with these Special Provisions.
3. Contractor shall observe the terms and rules of the CSXT Safe Way manual, which Agency and Contractor shall be required to obtain from CSXT, and in accord with any other instructions furnished by CSXT or CSXT's Representative.

B. Blasting

1. Agency or Contractor shall obtain CSXT Representative's and Agency Representative's prior written approval for use of explosives on or adjacent to CSXT property. If permission for use of explosives is granted, Agency or Contractor must comply with the following:

    a. Blasting shall be done with light charges under the direct supervision of a responsible officer or employee of Agency or Contractor.

    b. Electric detonating fuses shall not be used because of the possibility of premature explosions resulting from operation of two-way train radios.

    c. No blasting shall be done without the presence of an authorized representative of CSXT. At least 10 days' advance notice to CSXT Representative is required to arrange for the presence of an authorized CSXT representative and any flagging that CSXT may require.

    d. Agency or Contractor must have at the Project site adequate equipment, labor and materials, and allow sufficient time, to (i) clean up (at Agency's expense) debris resulting from the blasting without any delay to trains; and (ii) correct (at Agency's expense) any track misalignment or other damage to CSXT's property resulting from the blasting, as directed by CSXT Representative,

without delay to trains. If Agency's or Contractor's actions result in delay of any trains, including Amtrak passenger trains, Agency shall bear the entire cost thereof.

e. Agency and Contractor shall not store explosives on CSXT property.

2. CSXT Representative will:

a. Determine the approximate location of trains and advise Agency or Contractor of the approximate amount of time available for the blasting operation and clean-up.

b. Have the authority to order discontinuance of blasting if, in his or her opinion, blasting is too hazardous or is not in accord with these Special Provisions.

IX. MAINTENANCE OF DITCHES ADJACENT TO CSXT TRACKS

Agency or Contractor shall maintain all ditches and drainage structures free of silt or other obstructions that may result from their operations. Agency or Contractor shall provide erosion control measures during construction and use methods that accord with applicable state standard specifications for road and bridge construction, including either (1) silt fence; (2) hay or straw barrier; (3) berm or temporary ditches; (4) sediment basin; (5) aggregate checks; and (6) channel lining. All such maintenance and repair of damages due to Agency's or Contractor's operations shall be performed at Agency's expense.

X. FLAGGING / INSPECTION SERVICE

A. CSXT has sole authority to determine the need for flagging required to protect its operations and property. In general, flagging protection will be required whenever Agency or Contractor or their equipment are, or are likely to be, working within fifty (50) feet of live track or other track clearances specified by CSXT, or over tracks.

B. Agency shall reimburse CSXT directly for all costs of flagging that is required on account of construction within CSXT property shown in the Plans, or that is covered by an approved plan revision, supplemental agreement or change order.

C. Agency or Contractor shall give a minimum of 10 days' advance notice to CSXT Representative for anticipated need for flagging service. No work shall be undertaken until the flag person(s) is/are at the job site. If it is necessary for CSXT to advertise a flagging job for bid, it may take up to 90-days to obtain this

service, and CSXT shall not be liable for the cost of delays attributable to obtaining such service.

D. CSXT shall have the right to assign an individual to the site of the Project to perform inspection service whenever, in the opinion of CSXT Representative, such inspection may be necessary. Agency shall reimburse CSXT for the costs incurred by CSXT for such inspection service. Inspection service shall not relieve Agency or Contractor from liability for its Work.

E. CSXT shall render invoices for, and Agency shall pay for, the actual pay rate of the flagpersons and inspectors used, plus standard additives, whether that amount is above or below the rate provided in the Estimate. If the rate of pay that is to be used for inspector or flagging service is changed before the work is started or during the progress of the work, whether by law or agreement between CSXT and its employees, or if the tax rates on labor are changed, bills will be rendered by CSXT and paid by Agency using the new rates. Agency and Contractor shall perform their operations that require flagging protection or inspection service in such a manner and sequence that the cost of such will be as economical as possible.

XI. UTILITY FACILITIES ON CSXT PROPERTY

Agency shall arrange, upon approval from CSXT, to have any utility facilities on or over CSXT Property changed as may be necessary to provide clearances for the proposed trackage.

XII. CLEAN-UP

Agency or Contractor, upon completion of the Project, shall remove from CSXT's Property any temporary grade crossings, any temporary erosion control measures used to control drainage, all machinery, equipment, surplus materials, falsework, rubbish, or temporary buildings belonging to Agency or Contractor. Agency or Contractor, upon completion of the Project, shall leave CSXT Property in neat condition, satisfactory to CSXT Representative.

XIII. FAILURE TO COMPLY

If Agency or Contractor violate or fail to comply with any of the requirements of these Special Provisions, (a) CSXT may require Agency and/or Contractor to vacate CSXT Property; and (b) CSXT may withhold monies due Agency and/or Contractor; (c) CSXT may require Agency to withhold monies due Contractor; and (d) CSXT may cure such failure and the Agency shall reimburse CSXT for the cost of curing such failure.

EXHIBIT D

FORCE ACCOUNT ESTIMATE

ACCT. CODE : 709 - AL2198
Buy America

Form Revision 20251029-B

ESTIMATE SUBJECT TO REVISION AFTER: 4/29/2027		**DOT NO.:** 351455Y (CSX1030824)
CITY: Mobile	**COUNTY:** Mobile	**STATE:** AL
DESCRIPTION: Shipyard Road (Cypress Shores Drive N): Replace crossing surface with rail seal and asphalt, and install active at-grade warning devices.		
DIVISION: Atlanta	**SUB-DIV:** NO and M	**MILE POST:** 000 675.42
AGENCY PROJECT NUMBER: City of Mobile, Alabama #G-GMHMC		

PRELIMINARY ENGINEERING:					
Contracted & Administrative Engineering Services					$ -
Subtotal					$ -
CONSTRUCTION ENGINEERING/INSPECTION:					
Contracted & Administrative Engineering Services					$ 61,500
Subtotal					$ 61,500
FLAGGING SERVICE: (Contract/CSX Labor)					
Engineering Labor (Foreman/Inspector/Flagman)		10	Days @	$ 700.00	$ 7,000
Additive	240.40% (Engineering Department)				$ 16,828
Subtotal					$ 23,828
SIGNAL & COMMUNICATIONS WORK:					$ 691,320
TRACK WORK:					$ 167,708
CONTRACT WORK:					$ 480
PROJECT SUBTOTAL:					$ 944,836
CONTINGENCIES:	10.00%				$ 94,484
PROJECT TOTAL:					$ 1,039,320
CURRENT AUTHORIZED BUDGET:					$ -
TOTAL SUPPLEMENT REQUESTED:					$ 1,039,320
DIVISION OF COST:					
Agency	100.00%				$ 1,039,320
Railroad	0.00%				$ -
					$ 1,039,320

NOTE: Estimate is based on FULL CROSSING CLOSURE during work by Railroad Forces.

This estimate has been prepared based on site conditions, anticipated work duration periods, material prices, labor rates, manpower and resource availability, and other factors known as of the date prepared. The actual cost for CSXT work may differ based upon the agency's requirements, their contractor's work procedures, and/or other conditions that become apparent once construction commences or during the progress of the work

Office of Director - CSXT Public Projects, Jacksonville, Florida

Estimated prepared by: Benesch **Approved by:** KSW **CSXT Public Project Group**
DATE: 04/01/26 **REVISED:** **DATE:** 04/29/26

EXHIBIT E

PAYMENT SCHEDULE

Advance Payment in Full

Upon execution and delivery of notice to proceed with the Project, Agency will deposit with CSXT a sum equal to the Reimbursable Expenses, as shown by the Estimate. If CSXT anticipates that it may incur Reimbursable Expenses in excess of the deposited amount, CSXT will request an additional deposit equal to the then remaining Reimbursable Expenses which CSXT estimates that it will incur. CSXT shall request such additional deposit by delivery of invoices to Agency. Agency shall make such additional deposit within 30 days following delivery of such invoice to Agency.

EXHIBIT F

INSURANCE REQUIREMENTS

I. Insurance Policies:

Agency and Contractor, if and to the extent that either is performing work on or about CSXT's property, shall procure and maintain the following insurance policies:

1. Commercial General Liability coverage at their sole cost and expense with limits of not less than $5,000,000 in combined single limits for bodily injury and/or property damage per occurrence, and such policies shall name CSXT as an additional named insured. The policy shall include endorsement ISO CG 24 17 evidencing that coverage is provided for work within 50 feet of a railroad. If such endorsement is not included, railroad protective liability insurance must be provided as described in item 4 below.

2. Statutory Worker's Compensation and Employers Liability Insurance with limits of not less than $1,000,000, which insurance must contain a waiver of subrogation against CSXT and its affiliates (if permitted by state law).

3. Commercial automobile liability insurance with limits of not less than $1,000,000 combined single limit for bodily injury and/or property damage per occurrence, and such policies shall name CSXT as an additional named insured. The policy shall include endorsement ISO CA 20 70 evidencing that coverage is provided for work within 50 feet of a railroad. If such endorsement is not included, railroad protective liability insurance must be provided as described in item 4 below.

4. Railroad protective liability insurance with limits of not less than $5,000,000 combined single limit for bodily injury and/or property damage per occurrence and an aggregate annual limit of $10,000,000, which insurance shall satisfy the following additional requirements:

   a. The Railroad Protective Insurance Policy must be on the ISO/RIMA Form of Railroad Protective Insurance - Insurance Services Office (ISO) Form CG 00 35.

   b. CSX Transportation must be the named insured on the Railroad Protective Insurance Policy.

   c. Name and Address of Contractor and Agency must appear on the Declarations page.

   d. Description of operations must appear on the Declarations page and must match the Project description.

e. Authorized endorsements must include the Pollution Exclusion Amendment - CG 28 31, unless using form CG 00 35 version 96 and later.

f. Authorized endorsements may include:

(i) Broad Form Nuclear Exclusion - IL 00 21
(ii) 30-day Advance Notice of Non-renewal or cancellation
(iii) Required State Cancellation Endorsement
(iv) Quick Reference or Index - CL/IL 240

g. Authorized endorsements may not include:

(i) A Pollution Exclusion Endorsement except CG 28 31
(ii) A Punitive or Exemplary Damages Exclusion
(iii) A "Common Policy Conditions" Endorsement
(iv) Any endorsement that is not named in Section 4 (e) or (f) above.
(v) Policies that contain any type of deductible

5. All insurance companies must be A. M. Best rated A- and Class VII or better.

6. The CSX OP number or CSX contract number, as applicable, must appear on each Declarations page and/or certificates of insurance.

7. Such additional or different insurance as CSXT may require.

II. Additional Terms

1. Contractor must submit the original Railroad Protective Liability policy, Certificates of Insurance and all notices and correspondence regarding the insurance policies to:

Insurance Department
CSX Transportation, Inc.
500 Water Street, C-907
Jacksonville, FL 32202

OR

insurancedocuments@csx.com

2. Neither Agency nor Contractor may begin work on the Project until it has received CSXT's written approval of the required insurance.

SCHEDULE I

CONTRACTOR'S ACCEPTANCE

To and for the benefit of CSX Transportation, Inc. ("CSXT") and to induce CSXT to permit Contractor on or about CSXT's property for the purposes of performing work in accordance with the Agreement dated _____, 20___, between **CITY OF MOBILE, ALABAMA** and CSXT, Contractor hereby agrees to abide by and perform all applicable terms of the Agreement, including, but not limited to Exhibits C and F to the Agreement, and Sections 3, 9 and 11 of the Agreement.

Contractor: _____

By: _____
Name: _____
Title: _____
Date: _____

\\COR\130459.7



CAPITAL CONTRACT SUMMARY SHEET

AGENDA ITEM SUMMARY SHEET

Agenda of: July 7, 2026

Submitted by:
John Paine, Purchasing Agent

Sponsored by:
Spiro Cheriogotis, Mayor

Purpose and Scope of Project:
To approve issuance of purchase order to North American Fire Equipment Co Inc for Holmatro trench rescue equipment for MFRD.

Amount of Contract:
$108,573.00

Funding Source
General fune

ATTACHMENTS:
1. 0999_001

REVIEWERS:
Lana Pafenbach
Lana Pafenbach

AGENDA ITEM SUMMARY SHEET

Agenda of: 23 June 2026 (Date) Item No. _____

Submitted by: Procurement (Department) John Paine, Purchasing Agent (Department Head)

Sponsored by: Spiro N. Cheriogotis (Name) Mayor (Title)

Reviewed by: _____ (Executive Director)

Routing Authorized: James Barber (Mayor's Office) _____ (Date)

A brief synopsis and explanation of the following:

PROJECT NAME: Approval of Purchase Order to North American Fire Equipment Co Inc

PURPOSE & SCOPE OF PROJECT:
To approve issuance of purchase order to North American Fire Equipment Co Inc for Holmatro trench rescue equipment for MFRD.
General fund,

RESOLUTION ☒ ORDINANCE ☐ OTHER ☐

AMOUNT OF CONTRACT: $108,573.00

FUNDING SOURCE:

Budget Item: See Requisitions Discretionary Funds: _____

Budget amendment: REDUCE ☐ INCREASED ☐

Grant funds: _____ Matching funds: _____

Associated Costs:

Current year (itemize)
Type: _____ Amount: _____

Future years
Year: _____ Amount: _____

**If Cost will continue, write "indefinite" and list project annual-cost.*

Effective date of contract: On issuance to vendor.

Renewal date of contract (if applicable): _____

If not bid, state reason: NPPGov cooperative purchasing agreement, not on state contract.

How many bidders received bid packages (if applicable): na

How many bidders submitted bids (if applicable): na

If this is not the lowest bid, explain why not:

RESOLUTION

Sponsored by: Mayor Spiro N. Cheriogotis

BE IT RESOLVED BY THE CITY COUNCIL OF MOBILE, ALABAMA, that the Purchasing Agent is authorized to execute, for and on behalf of the City of Mobile, a purchase order to the indicated vendor in the approximate amount stated, and to approve the supporting bid award if required, for the following requisition as indicated below and attached herein:

Requisition	Fiscal Year	Department	Description	Amount	Vendor
13829	2026	(1510) FIRE ADMINISTRATION	HOLMATRO TRENCH RESCUE EQUIPMENT FOR MFRD (NPPGOV COOPERATIVE PURCHASING AGREEMENT, NOT ON STATE CONTRACT)	$108,573.00	(149290) NORTH AMERICAN FIRE EQUIPMENT CO INC

Adopted:

_____

City Clerk

Bill To	Requisition 00013829-00 FY 2026
ACCOUNTS PAYABLE P O BOX 389 MOBILE, AL 36601 vendorinvoices@cityofmobile.org	Acct No: 1000.30.15.1510.1510.1510.0000.0000.47020. Review: Buyer: 910521901 Status: Approved

Vendor	Ship To
NORTH AMERICAN FIRE EQUIPMENT CO INC PO Box 2928 DECATUR, AL 35602 USA Tel#256-353-7100 Fax 256-355-0852	FIRE CENTRAL SUPPLY 2851 OLD SHELL ROAD MOBILE, AL 36607 RICHARDSONV@CITYOFMOBILE.GOV Delivery Reference VICTORIA RICHARDSON Deliver To FIRE CENTRAL SUPPLY 2851 OLD SHELL ROAD MOBILE, AL 36607

Date Ordered	Vendor Number	Date Required	Ship Via	Terms	Department
06/11/26	149290				FIRE ADMINISTRATION

LN	Description / Account	Qty	Unit Price	Net Price
	General Notes			
	AS PER YOUR QUOTE: Q990826052146655 PER NPP.GOV CONTRACT# PS26180			
001	RESCUE EQUIPMENT, AS SPECIFIED: Holmatro Omnishore PA 09 H2S12 Hand Pump ITEM #151.004.204 PER QUOTE Q990826052146655 Vendor Item	4.00 EACH	1242.00000	4968.00
1	1000.30.15.1510.1510.1510.0000.0000.47020.			4968.00
	Ship To FIRE CENTRAL SUPPLY 2851 OLD SHELL ROAD MOBILE, AL 36607 Delivery Reference VICTORIA RICHARDSON Deliver To FIRE CENTRAL SUPPLY 2851 OLD SHELL ROAD MOBILE, AL 36607			
002	RESCUE EQUIPMENT, AS SPECIFIED: Holmatro Omnishore BPL11A Swivel Base D-Ring ITEM #151.002.213 PER	14.00 EACH	652.00000	9128.00

Bill To	Requisition 00013829-00 FY 2026
ACCOUNTS PAYABLE P O BOX 389 MOBILE, AL 36601 vendorinvoices@cityofmobile.org	Acct No: 1000.30.15.1510.1510.1510.0000.0000.47020. Review: Buyer: 910521901 Status: Approved Page 2

Vendor	Ship To
NORTH AMERICAN FIRE EQUIPMENT CO INC PO Box 2928 DECATUR, AL 35602 USA Tel#256-353-7100 Fax 256-355-0852	FIRE CENTRAL SUPPLY 2851 OLD SHELL ROAD MOBILE, AL 36607 RICHARDSONV@CITYOFMOBILE.GOV Delivery Reference VICTORIA RICHARDSON Deliver To FIRE CENTRAL SUPPLY 2851 OLD SHELL ROAD MOBILE, AL 36607

Date Ordered	Vendor Number	Date Required	Ship Via	Terms	Department
06/11/26	149290				FIRE ADMINISTRATION

LN	Description / Account	Qty	Unit Price	Net Price
	QUOTE Q990826052146655 Vendor Item			
1	1000.30.15.1510.1510.1510.0000.0000.47020.			9128.00
	Ship To FIRE CENTRAL SUPPLY 2851 OLD SHELL ROAD MOBILE, AL 36607 Delivery Reference VICTORIA RICHARDSON Deliver To FIRE CENTRAL SUPPLY 2851 OLD SHELL ROAD MOBILE, AL 36607			
003	RESCUE EQUIPMENT, AS SPECIFIED: Holmatro Rigid Base BPL30 ITEM #151.002.229 PER QUOTE Q990826052146655 Vendor Item	10.00 EACH	174.00000	1740.00
1	1000.30.15.1510.1510.1510.0000.0000.47020.			1740.00

Bill To	Requisition 00013829-00 FY 2026
ACCOUNTS PAYABLE P O BOX 389 MOBILE, AL 36601 vendorinvoices@cityofmobile.org	Acct No: 1000.30.15.1510.1510.1510.0000.0000.47020. Review: Buyer: 910521901 Status: Approved Page 3

Vendor	Ship To
NORTH AMERICAN FIRE EQUIPMENT CO INC PO Box 2928 DECATUR, AL 35602 USA Tel#256-353-7100 Fax 256-355-0852	FIRE CENTRAL SUPPLY 2851 OLD SHELL ROAD MOBILE, AL 36607 RICHARDSONV@CITYOFMOBILE.GOV Delivery Reference VICTORIA RICHARDSON Deliver To FIRE CENTRAL SUPPLY 2851 OLD SHELL ROAD MOBILE, AL 36607

Date Ordered	Vendor Number	Date Required	Ship Via	Terms	Department
06/11/26	149290				FIRE ADMINISTRATION

LN	Description / Account	Qty	Unit Price	Net Price
	Ship To FIRE CENTRAL SUPPLY 2851 OLD SHELL ROAD MOBILE, AL 36607 Delivery Reference VICTORIA RICHARDSON Deliver To FIRE CENTRAL SUPPLY 2851 OLD SHELL ROAD MOBILE, AL 36607			
004	RESCUE EQUIPMENT, AS SPECIFIED: Holmatro Omnishore BPL10 Swivel Base ITEM #151.002.194 PER QUOTE Q990826052146655 Vendor Item	30.00 EACH	308.00000	9240.00
	1 1000.30.15.1510.1510.1510.0000.0000.47020.			9240.00
	Ship To FIRE CENTRAL SUPPLY 2851 OLD SHELL ROAD MOBILE, AL 36607 Delivery Reference VICTORIA RICHARDSON Deliver To FIRE CENTRAL SUPPLY			

Bill To	Requisition 00013829-00 FY 2026
ACCOUNTS PAYABLE P O BOX 389 MOBILE, AL 36601 vendorinvoices@cityofmobile.org	Acct No: 1000.30.15.1510.1510.1510.0000.0000.47020. Review: Buyer: 910521901 Status: Approved Page 4

Vendor	Ship To
NORTH AMERICAN FIRE EQUIPMENT CO INC PO Box 2928 DECATUR, AL 35602 USA Tel#256-353-7100 Fax 256-355-0852	FIRE CENTRAL SUPPLY 2851 OLD SHELL ROAD MOBILE, AL 36607 RICHARDSONV@CITYOFMOBILE.GOV Delivery Reference VICTORIA RICHARDSON Deliver To FIRE CENTRAL SUPPLY 2851 OLD SHELL ROAD MOBILE, AL 36607

Date Ordered	Vendor Number	Date Required	Ship Via	Terms	Department
06/11/26	149290				FIRE ADMINISTRATION

LN	Description / Account	Qty	Unit Price	Net Price
	2851 OLD SHELL ROAD MOBILE, AL 36607			
005	RESCUE EQUIPMENT, AS SPECIFIED: Holmatro Omnishore Bipod Base BPL12 ITEM #151.002.365 PER QUOTE Q990826052146655 Vendor Item	2.00 EACH	1262.00000	2524.00
	1 1000.30.15.1510.1510.1510.0000.0000.47020.			2524.00
	Ship To FIRE CENTRAL SUPPLY 2851 OLD SHELL ROAD MOBILE, AL 36607 Delivery Reference VICTORIA RICHARDSON Deliver To FIRE CENTRAL SUPPLY 2851 OLD SHELL ROAD MOBILE, AL 36607			
006	RESCUE EQUIPMENT, AS SPECIFIED: Holmatro Omnishore MHL140 Multi Head ITEM #151.004.176 PER QUOTE Q990826052146655 Vendor Item	10.00 EACH	227.50000	2275.00

Bill To	Requisition 00013829-00 FY 2026
ACCOUNTS PAYABLE P O BOX 389 MOBILE, AL 36601 vendorinvoices@cityofmobile.org	Acct No: 1000.30.15.1510.1510.1510.0000.0000.47020. Review: Buyer: 910521901 Status: Approved Page 5

Vendor	Ship To
NORTH AMERICAN FIRE EQUIPMENT CO INC PO Box 2928 DECATUR, AL 35602 USA Tel#256-353-7100 Fax 256-355-0852	FIRE CENTRAL SUPPLY 2851 OLD SHELL ROAD MOBILE, AL 36607 RICHARDSONV@CITYOFMOBILE.GOV Delivery Reference VICTORIA RICHARDSON Deliver To FIRE CENTRAL SUPPLY 2851 OLD SHELL ROAD MOBILE, AL 36607

Date Ordered	Vendor Number	Date Required	Ship Via	Terms	Department
06/11/26	149290				FIRE ADMINISTRATION

LN	Description / Account	Qty	Unit Price	Net Price
1	1000.30.15.1510.1510.1510.0000.0000.47020.			2275.00

Ship To
FIRE CENTRAL SUPPLY
2851 OLD SHELL ROAD
MOBILE, AL 36607
Delivery Reference
VICTORIA RICHARDSON

Deliver To
FIRE CENTRAL SUPPLY
2851 OLD SHELL ROAD
MOBILE, AL 36607

007	RESCUE EQUIPMENT, AS SPECIFIED: Holmatro Omnishore HP110 Chain Adapter ITEM #151.004.154 PER QUOTE Q990826052146655 Vendor Item	10.00 EACH	297.60000	2976.00
1	1000.30.15.1510.1510.1510.0000.0000.47020.			2976.00

Ship To
FIRE CENTRAL SUPPLY
2851 OLD SHELL ROAD
MOBILE, AL 36607
Delivery Reference
VICTORIA RICHARDSON

Deliver To

Bill To
ACCOUNTS PAYABLE
P O BOX 389

MOBILE, AL
36601
vendorinvoices@cityofmobile.org

Requisition 00013829-00 FY 2026

Acct No:
1000.30.15.1510.1510.1510.0000.0000.47020.
Review:
Buyer: 910521901
Status: Approved

Vendor
NORTH AMERICAN FIRE EQUIPMENT CO INC
PO Box 2928

DECATUR, AL 35602
USA
Tel#256-353-7100
Fax 256-355-0852

Ship To
FIRE CENTRAL SUPPLY
2851 OLD SHELL ROAD

MOBILE, AL 36607
RICHARDSONV@CITYOFMOBILE.GOV

Delivery Reference
VICTORIA RICHARDSON

Deliver To
FIRE CENTRAL SUPPLY
2851 OLD SHELL ROAD

MOBILE, AL 36607

Date Ordered	Vendor Number	Date Required	Ship Via	Terms	Department
06/11/26	149290				FIRE ADMINISTRATION

LN	Description / Account	Qty	Unit Price	Net Price
	FIRE CENTRAL SUPPLY 2851 OLD SHELL ROAD MOBILE, AL 36607			
008	RESCUE EQUIPMENT, AS SPECIFIED: Holmatro Beam Support ITEM #151. 002.312 PER QUOTE Q990826052146655 Vendor Item	6.00 EACH	194.00000	1164.00
	1 1000.30.15.1510.1510.1510.0000.0000.47020.			1164.00
	Ship To FIRE CENTRAL SUPPLY 2851 OLD SHELL ROAD MOBILE, AL 36607 Delivery Reference VICTORIA RICHARDSON Deliver To FIRE CENTRAL SUPPLY 2851 OLD SHELL ROAD MOBILE, AL 36607			
009	RESCUE EQUIPMENT, AS SPECIFIED: Holmatro Column Clamp ITEM #151. 002.494 PER QUOTE Q990826052146655 Vendor Item	6.00 EACH	1232.00000	7392.00
	1 1000.30.15.1510.1510.1510.0000.0000.47020.			7392.00

Bill To	Requisition 00013829-00 FY 2026
ACCOUNTS PAYABLE P O BOX 389 MOBILE, AL 36601 vendorinvoices@cityofmobile.org	Acct No: 1000.30.15.1510.1510.1510.0000.0000.47020. Review: Buyer: 910521901 Status: Approved Page 7

Vendor	Ship To
NORTH AMERICAN FIRE EQUIPMENT CO INC PO Box 2928 DECATUR, AL 35602 USA Tel#256-353-7100 Fax 256-355-0852	FIRE CENTRAL SUPPLY 2851 OLD SHELL ROAD MOBILE, AL 36607 RICHARDSONV@CITYOFMOBILE.GOV Delivery Reference VICTORIA RICHARDSON Deliver To FIRE CENTRAL SUPPLY 2851 OLD SHELL ROAD MOBILE, AL 36607

Date Ordered	Vendor Number	Date Required	Ship Via	Terms	Department
06/11/26	149290				FIRE ADMINISTRATION

LN	Description / Account	Qty	Unit Price	Net Price
	Ship To FIRE CENTRAL SUPPLY 2851 OLD SHELL ROAD MOBILE, AL 36607 Delivery Reference VICTORIA RICHARDSON Deliver To FIRE CENTRAL SUPPLY 2851 OLD SHELL ROAD MOBILE, AL 36607			
010	RESCUE EQUIPMENT, AS SPECIFIED: Holmatro Omnishore RR150 Raker Raker Rail ITEM #151.002.296 PER QUOTE Q990826052146655 Vendor Item	12.00 EACH	611.00000	7332.00
	1 1000.30.15.1510.1510.1510.0000.0000.47020.			7332.00
	Ship To FIRE CENTRAL SUPPLY 2851 OLD SHELL ROAD MOBILE, AL 36607 Delivery Reference VICTORIA RICHARDSON Deliver To FIRE CENTRAL SUPPLY			

Bill To	Requisition 00013829-00 FY 2026
ACCOUNTS PAYABLE P O BOX 389 MOBILE, AL 36601 vendorinvoices@cityofmobile.org	Acct No: 1000.30.15.1510.1510.1510.0000.0000.47020. Review: Buyer: 910521901 Status: Approved Page 8

Vendor	Ship To
NORTH AMERICAN FIRE EQUIPMENT CO INC PO Box 2928 DECATUR, AL 35602 USA Tel#256-353-7100 Fax 256-355-0852	FIRE CENTRAL SUPPLY 2851 OLD SHELL ROAD MOBILE, AL 36607 RICHARDSONV@CITYOFMOBILE.GOV Delivery Reference VICTORIA RICHARDSON Deliver To FIRE CENTRAL SUPPLY 2851 OLD SHELL ROAD MOBILE, AL 36607

Date Ordered	Vendor Number	Date Required	Ship Via	Terms	Department
06/11/26	149290				FIRE ADMINISTRATION

LN	Description / Account	Qty	Unit Price	Net Price
	2851 OLD SHELL ROAD MOBILE, AL 36607			
011	RESCUE EQUIPMENT, AS SPECIFIED: Holmatro Omnishore RRP01 Raker Rail Pin ITEM #151.002.501 PER QUOTE Q990826052146655 Vendor Item	20.00 EACH	72.00000	1440.00
	1 1000.30.15.1510.1510.1510.0000.0000.47020.			1440.00
	Ship To FIRE CENTRAL SUPPLY 2851 OLD SHELL ROAD MOBILE, AL 36607 Delivery Reference VICTORIA RICHARDSON Deliver To FIRE CENTRAL SUPPLY 2851 OLD SHELL ROAD MOBILE, AL 36607			
012	RESCUE EQUIPMENT, AS SPECIFIED: Holmatro Omnishore PRS90 Pull Restrictor ITEM #151.004.117 PER QUOTE Q990826052146655 Vendor Item	15.00 EACH	102.00000	1530.00

Bill To
ACCOUNTS PAYABLE
P O BOX 389

MOBILE, AL
36601
vendorinvoices@cityofmobile.org

Requisition 00013829-00 FY 2026

Acct No:
1000.30.15.1510.1510.1510.0000.0000.47020.
Review:
Buyer: 910521901
Status: Approved

Vendor
NORTH AMERICAN FIRE EQUIPMENT CO INC
PO Box 2928

DECATUR, AL 35602
USA
Tel#256-353-7100
Fax 256-355-0852

Ship To
FIRE CENTRAL SUPPLY
2851 OLD SHELL ROAD

MOBILE, AL 36607
RICHARDSONV@CITYOFMOBILE.GOV

Delivery Reference
VICTORIA RICHARDSON

Deliver To
FIRE CENTRAL SUPPLY
2851 OLD SHELL ROAD

MOBILE, AL 36607

Date Ordered	Vendor Number	Date Required	Ship Via	Terms	Department
06/11/26	149290				FIRE ADMINISTRATION

LN	Description / Account	Qty	Unit Price	Net Price
1	1000.30.15.1510.1510.1510.0000.0000.47020.			1530.00

Ship To
FIRE CENTRAL SUPPLY
2851 OLD SHELL ROAD
MOBILE, AL 36607
Delivery Reference
VICTORIA RICHARDSON

Deliver To
FIRE CENTRAL SUPPLY
2851 OLD SHELL ROAD
MOBILE, AL 36607

013	RESCUE EQUIPMENT, AS SPECIFIED: Holmatro Omnishore CLA90 Clamp ITEM #151.002.301 PER QUOTE Q990826052146655 Vendor Item	32.00 EACH	673.00000	21536.00
1	1000.30.15.1510.1510.1510.0000.0000.47020.			21536.00

Ship To
FIRE CENTRAL SUPPLY
2851 OLD SHELL ROAD
MOBILE, AL 36607
Delivery Reference
VICTORIA RICHARDSON

Deliver To

Bill To ACCOUNTS PAYABLE P O BOX 389 MOBILE, AL 36601 vendorinvoices@cityofmobile.org	Requisition 00013829-00 FY 2026 Acct No: 1000.30.15.1510.1510.1510.0000.0000.47020. Review: Buyer: 910521901 Status: Approved Page 10

Vendor	Ship To
NORTH AMERICAN FIRE EQUIPMENT CO INC PO Box 2928 DECATUR, AL 35602 USA Tel#256-353-7100 Fax 256-355-0852	FIRE CENTRAL SUPPLY 2851 OLD SHELL ROAD MOBILE, AL 36607 RICHARDSONV@CITYOFMOBILE.GOV Delivery Reference VICTORIA RICHARDSON Deliver To FIRE CENTRAL SUPPLY 2851 OLD SHELL ROAD MOBILE, AL 36607

Date Ordered	Vendor Number	Date Required	Ship Via	Terms	Department
06/11/26	149290				FIRE ADMINISTRATION

LN	Description / Account	Qty	Unit Price	Net Price
	FIRE CENTRAL SUPPLY 2851 OLD SHELL ROAD MOBILE, AL 36607			
014	RESCUE EQUIPMENT, AS SPECIFIED: Holmatro Thrust Block ITEM #151. 002.288 PER QUOTE Q990826052146655 Vendor Item	4.00 EACH	663.00000	2652.00
	1 1000.30.15.1510.1510.1510.0000.0000.47020.			2652.00
	Ship To FIRE CENTRAL SUPPLY 2851 OLD SHELL ROAD MOBILE, AL 36607 Delivery Reference VICTORIA RICHARDSON Deliver To FIRE CENTRAL SUPPLY 2851 OLD SHELL ROAD MOBILE, AL 36607			
015	RESCUE EQUIPMENT, AS SPECIFIED: HolmatroLtrenchblock ITEM #151.002. 344 PER QUOTE Q990826052146655 Vendor Item	4.00 EACH	1137.50000	4550.00
	1 1000.30.15.1510.1510.1510.0000.0000.47020.			4550.00

Bill To	Requisition 00013829-00 FY 2026
ACCOUNTS PAYABLE P O BOX 389 MOBILE, AL 36601 vendorinvoices@cityofmobile.org	Acct No: 1000.30.15.1510.1510.1510.0000.0000.47020. Review: Buyer: 910521901 Status: Approved Page 11

Vendor	Ship To
NORTH AMERICAN FIRE EQUIPMENT CO INC PO Box 2928 DECATUR, AL 35602 USA Tel#256-353-7100 Fax 256-355-0852	FIRE CENTRAL SUPPLY 2851 OLD SHELL ROAD MOBILE, AL 36607 RICHARDSONV@CITYOFMOBILE.GOV Delivery Reference VICTORIA RICHARDSON Deliver To FIRE CENTRAL SUPPLY 2851 OLD SHELL ROAD MOBILE, AL 36607

Date Ordered	Vendor Number	Date Required	Ship Via	Terms	Department
06/11/26	149290				FIRE ADMINISTRATION

LN	Description / Account	Qty	Unit Price	Net Price
	Ship To FIRE CENTRAL SUPPLY 2851 OLD SHELL ROAD MOBILE, AL 36607 Delivery Reference VICTORIA RICHARDSON Deliver To FIRE CENTRAL SUPPLY 2851 OLD SHELL ROAD MOBILE, AL 36607			
016	RESCUE EQUIPMENT, AS SPECIFIED: Holmatro Waler Rail ITEM #151.004. 140 PER QUOTE Q990826052146655 Vendor Item	8.00 EACH	1389.00000	11112.00
	1 1000.30.15.1510.1510.1510.0000.0000.47020.			11112.00
	Ship To FIRE CENTRAL SUPPLY 2851 OLD SHELL ROAD MOBILE, AL 36607 Delivery Reference VICTORIA RICHARDSON Deliver To FIRE CENTRAL SUPPLY 2851 OLD SHELL ROAD			

Bill To	Requisition 00013829-00 FY 2026
ACCOUNTS PAYABLE P O BOX 389 MOBILE, AL 36601 vendorinvoices@cityofmobile.org	Acct No: 1000.30.15.1510.1510.1510.0000.0000.47020. Review: Buyer: 910521901 Status: Approved Page 12

Vendor	Ship To
NORTH AMERICAN FIRE EQUIPMENT CO INC PO Box 2928 DECATUR, AL 35602 USA Tel#256-353-7100 Fax 256-355-0852	FIRE CENTRAL SUPPLY 2851 OLD SHELL ROAD MOBILE, AL 36607 RICHARDSONV@CITYOFMOBILE.GOV Delivery Reference VICTORIA RICHARDSON Deliver To FIRE CENTRAL SUPPLY 2851 OLD SHELL ROAD MOBILE, AL 36607

Date Ordered	Vendor Number	Date Required	Ship Via	Terms	Department
06/11/26	149290				FIRE ADMINISTRATION

LN	Description / Account	Qty	Unit Price	Net Price
	MOBILE, AL 36607			
017	RESCUE EQUIPMENT, AS SPECIFIED: Holmatro Omnishore Pin Waler Rail WRP01 ITEM #151.004.317 PER QUOTE Q990826052146655 Vendor Item	30.00 EACH	123.00000	3690.00
	1 1000.30.15.1510.1510.1510.0000.0000.47020.			3690.00
	Ship To FIRE CENTRAL SUPPLY 2851 OLD SHELL ROAD MOBILE, AL 36607 Delivery Reference VICTORIA RICHARDSON Deliver To FIRE CENTRAL SUPPLY 2851 OLD SHELL ROAD MOBILE, AL 36607			
018	RESCUE EQUIPMENT, AS SPECIFIED: Holmatro Hose AH RD 32ft ITEM #385. 570.004 PER QUOTE Q990826052146655 Vendor Item	2.00 EACH	220.00000	440.00
	1 1000.30.15.1510.1510.1510.0000.0000.47020.			440.00

Bill To	Requisition 00013829-00 FY 2026
ACCOUNTS PAYABLE P O BOX 389 MOBILE, AL 36601 vendorinvoices@cityofmobile.org	Acct No: 1000.30.15.1510.1510.1510.0000.0000.47020. Review: Buyer: 910521901 Status: Approved

Vendor	Ship To
NORTH AMERICAN FIRE EQUIPMENT CO INC PO Box 2928 DECATUR, AL 35602 USA Tel#256-353-7100 Fax 256-355-0852	FIRE CENTRAL SUPPLY 2851 OLD SHELL ROAD MOBILE, AL 36607 RICHARDSONV@CITYOFMOBILE.GOV Delivery Reference VICTORIA RICHARDSON Deliver To FIRE CENTRAL SUPPLY 2851 OLD SHELL ROAD MOBILE, AL 36607

Date Ordered	Vendor Number	Date Required	Ship Via	Terms	Department
06/11/26	149290				FIRE ADMINISTRATION

LN	Description / Account	Qty	Unit Price	Net Price
	Ship To FIRE CENTRAL SUPPLY 2851 OLD SHELL ROAD MOBILE, AL 36607 Delivery Reference VICTORIA RICHARDSON Deliver To FIRE CENTRAL SUPPLY 2851 OLD SHELL ROAD MOBILE, AL 36607			
019	RESCUE EQUIPMENT, AS SPECIFIED: Holmatro Hose AH GN 32FT ITEM #159. 002.101 PER QUOTE Q990826052146655 Vendor Item	2.00 EACH	220.00000	440.00
1	1000.30.15.1510.1510.1510.0000.0000.47020.			440.00
	Ship To FIRE CENTRAL SUPPLY 2851 OLD SHELL ROAD MOBILE, AL 36607 Delivery Reference VICTORIA RICHARDSON Deliver To FIRE CENTRAL SUPPLY 2851 OLD SHELL ROAD			

Bill To	Requisition 00013829-00 FY 2026
ACCOUNTS PAYABLE P O BOX 389 MOBILE, AL 36601 vendorinvoices@cityofmobile.org	Acct No: 1000.30.15.1510.1510.1510.0000.0000.47020. Review: Buyer: 910521901 Status: Approved Page 14

Vendor	Ship To
NORTH AMERICAN FIRE EQUIPMENT CO INC PO Box 2928 DECATUR, AL 35602 USA Tel#256-353-7100 Fax 256-355-0852	FIRE CENTRAL SUPPLY 2851 OLD SHELL ROAD MOBILE, AL 36607 RICHARDSONV@CITYOFMOBILE.GOV Delivery Reference VICTORIA RICHARDSON Deliver To FIRE CENTRAL SUPPLY 2851 OLD SHELL ROAD MOBILE, AL 36607

Date Ordered	Vendor Number	Date Required	Ship Via	Terms	Department
06/11/26	149290				FIRE ADMINISTRATION

LN	Description / Account	Qty	Unit Price	Net Price
	MOBILE, AL 36607			
020	RESCUE EQUIPMENT, AS SPECIFIED: Holmatro Hose AH GY 32FT ITEM #159. 002.216 PER QUOTE Q990826052146655 Vendor Item	2.00 EACH	220.00000	440.00
	1 1000.30.15.1510.1510.1510.0000.0000.47020.			440.00
	Ship To FIRE CENTRAL SUPPLY 2851 OLD SHELL ROAD MOBILE, AL 36607 Delivery Reference VICTORIA RICHARDSON Deliver To FIRE CENTRAL SUPPLY 2851 OLD SHELL ROAD MOBILE, AL 36607			
021	RESCUE EQUIPMENT, AS SPECIFIED: Holmatro Air Hose HA 16 Yellow ITEM #358.570.001-D PER QUOTE Q990826052146655 Vendor Item	2.00 EACH	183.00000	366.00
	1 1000.30.15.1510.1510.1510.0000.0000.47020.			366.00

Bill To	Requisition 00013829-00 FY 2026
ACCOUNTS PAYABLE P O BOX 389 MOBILE, AL 36601 vendorinvoices@cityofmobile.org	Acct No: 1000.30.15.1510.1510.1510.0000.0000.47020. Review: Buyer: 910521901 Status: Approved Page 15

Vendor	Ship To
NORTH AMERICAN FIRE EQUIPMENT CO INC PO Box 2928 DECATUR, AL 35602 USA Tel#256-353-7100 Fax 256-355-0852	FIRE CENTRAL SUPPLY 2851 OLD SHELL ROAD MOBILE, AL 36607 RICHARDSONV@CITYOFMOBILE.GOV Delivery Reference VICTORIA RICHARDSON Deliver To FIRE CENTRAL SUPPLY 2851 OLD SHELL ROAD MOBILE, AL 36607

Date Ordered	Vendor Number	Date Required	Ship Via	Terms	Department
06/11/26	149290				FIRE ADMINISTRATION

LN	Description / Account	Qty	Unit Price	Net Price
	Ship To FIRE CENTRAL SUPPLY 2851 OLD SHELL ROAD MOBILE, AL 36607 Delivery Reference VICTORIA RICHARDSON Deliver To FIRE CENTRAL SUPPLY 2851 OLD SHELL ROAD MOBILE, AL 36607			
022	RESCUE EQUIPMENT, AS SPECIFIED: Holmatro Air Hose HA 16 Blue ITEM #358.570.002-D PER QUOTE Q990826052146655 Vendor Item	2.00 EACH	183.00000	366.00
1	1000.30.15.1510.1510.1510.0000.0000.47020.			366.00
	Ship To FIRE CENTRAL SUPPLY 2851 OLD SHELL ROAD MOBILE, AL 36607 Delivery Reference VICTORIA RICHARDSON Deliver To FIRE CENTRAL SUPPLY			

Bill To	Requisition 00013829-00 FY 2026
ACCOUNTS PAYABLE P O BOX 389 MOBILE, AL 36601 vendorinvoices@cityofmobile.org	Acct No: 1000.30.15.1510.1510.1510.0000.0000.47020. Review: Buyer: 910521901 Status: Approved

Vendor	Ship To
NORTH AMERICAN FIRE EQUIPMENT CO INC PO Box 2928 DECATUR, AL 35602 USA Tel#256-353-7100 Fax 256-355-0852	FIRE CENTRAL SUPPLY 2851 OLD SHELL ROAD MOBILE, AL 36607 RICHARDSONV@CITYOFMOBILE.GOV Delivery Reference VICTORIA RICHARDSON Deliver To FIRE CENTRAL SUPPLY 2851 OLD SHELL ROAD MOBILE, AL 36607

Date Ordered	Vendor Number	Date Required	Ship Via	Terms	Department
06/11/26	149290				FIRE ADMINISTRATION

LN	Description / Account	Qty	Unit Price	Net Price
	2851 OLD SHELL ROAD MOBILE, AL 36607			
023	RESCUE EQUIPMENT, AS SPECIFIED: Holmatro Hose Ah GN 16 Ft ITEM #159.002.102 PER QUOTE Q990826052146655 Vendor Item	2.00 EACH	183.00000	366.00
	1 1000.30.15.1510.1510.1510.0000.0000.47020.			366.00
	Ship To FIRE CENTRAL SUPPLY 2851 OLD SHELL ROAD MOBILE, AL 36607 Delivery Reference VICTORIA RICHARDSON Deliver To FIRE CENTRAL SUPPLY 2851 OLD SHELL ROAD MOBILE, AL 36607			
024	RESCUE EQUIPMENT, AS SPECIFIED: Holmatro Hose Ah LB 16 Ft ITEM #159.002.097 PER QUOTE Q990826052146655 Vendor Item	2.00 EACH	183.00000	366.00

Bill To	Requisition 00013829-00 FY 2026
ACCOUNTS PAYABLE P O BOX 389 MOBILE, AL 36601 vendorinvoices@cityofmobile.org	Acct No: 1000.30.15.1510.1510.1510.0000.0000.47020. Review: Buyer: 910521901 Status: Approved Page 17

Vendor	Ship To
NORTH AMERICAN FIRE EQUIPMENT CO INC PO Box 2928 DECATUR, AL 35602 USA Tel#256-353-7100 Fax 256-355-0852	FIRE CENTRAL SUPPLY 2851 OLD SHELL ROAD MOBILE, AL 36607 RICHARDSONV@CITYOFMOBILE.GOV Delivery Reference VICTORIA RICHARDSON Deliver To FIRE CENTRAL SUPPLY 2851 OLD SHELL ROAD MOBILE, AL 36607

Date Ordered	Vendor Number	Date Required	Ship Via	Terms	Department
06/11/26	149290				FIRE ADMINISTRATION

LN	Description / Account	Qty	Unit Price	Net Price
1	1000.30.15.1510.1510.1510.0000.0000.47020.			366.00
	Ship To FIRE CENTRAL SUPPLY 2851 OLD SHELL ROAD MOBILE, AL 36607 Delivery Reference VICTORIA RICHARDSON Deliver To FIRE CENTRAL SUPPLY 2851 OLD SHELL ROAD MOBILE, AL 36607			
025	RESCUE EQUIPMENT, AS SPECIFIED: Holmatro HPRV 347 REGU ITEM #159. 002.074 PER QUOTE Q990826052146655 Vendor Item	2.00 EACH	472.00000	944.00
1	1000.30.15.1510.1510.1510.0000.0000.47020.			944.00
	Ship To FIRE CENTRAL SUPPLY 2851 OLD SHELL ROAD MOBILE, AL 36607 Delivery Reference VICTORIA RICHARDSON Deliver To FIRE CENTRAL SUPPLY			

Bill To	Requisition 00013829-00 FY 2026
ACCOUNTS PAYABLE P O BOX 389 MOBILE, AL 36601 vendorinvoices@cityofmobile.org	Acct No: 1000.30.15.1510.1510.1510.0000.0000.47020. Review: Buyer: 910521901 Status: Approved

Vendor	Ship To
NORTH AMERICAN FIRE EQUIPMENT CO INC PO Box 2928 DECATUR, AL 35602 USA Tel#256-353-7100 Fax 256-355-0852	FIRE CENTRAL SUPPLY 2851 OLD SHELL ROAD MOBILE, AL 36607 RICHARDSONV@CITYOFMOBILE.GOV Delivery Reference VICTORIA RICHARDSON Deliver To FIRE CENTRAL SUPPLY 2851 OLD SHELL ROAD MOBILE, AL 36607

Date Ordered	Vendor Number	Date Required	Ship Via	Terms	Department
06/11/26	149290				FIRE ADMINISTRATION

LN	Description / Account	Qty	Unit Price	Net Price
	2851 OLD SHELL ROAD MOBILE, AL 36607			
026	RESCUE EQUIPMENT, AS SPECIFIED: Holmatro HTC12 Control Panel ITEM #159.000.223 PER QUOTE Q990826052146655 Vendor Item	2.00 EACH	2146.00000	4292.00
	1 1000.30.15.1510.1510.1510.0000.0000.47020.			4292.00
	Ship To FIRE CENTRAL SUPPLY 2851 OLD SHELL ROAD MOBILE, AL 36607 Delivery Reference VICTORIA RICHARDSON Deliver To FIRE CENTRAL SUPPLY 2851 OLD SHELL ROAD MOBILE, AL 36607			
027	RESCUE EQUIPMENT, AS SPECIFIED: Holmatro T-Splitter ITEM #151.004. 864 PER QUOTE Q990826052146655 Vendor Item	6.00 EACH	109.00000	654.00
	1 1000.30.15.1510.1510.1510.0000.0000.47020.			654.00

Bill To
ACCOUNTS PAYABLE
P O BOX 389

MOBILE, AL
36601
vendorinvoices@cityofmobile.org

Requisition 00013829-00 FY 2026

Acct No:
1000.30.15.1510.1510.1510.0000.0000.47020.
Review:
Buyer: 910521901
Status: Approved

Vendor
NORTH AMERICAN FIRE EQUIPMENT CO INC
PO Box 2928

DECATUR, AL 35602
USA
Tel#256-353-7100
Fax 256-355-0852

Ship To
FIRE CENTRAL SUPPLY
2851 OLD SHELL ROAD

MOBILE, AL 36607
RICHARDSONV@CITYOFMOBILE.GOV

Delivery Reference
VICTORIA RICHARDSON

Deliver To
FIRE CENTRAL SUPPLY
2851 OLD SHELL ROAD

MOBILE, AL 36607

Date Ordered	Vendor Number	Date Required	Ship Via	Terms	Department
06/11/26	149290				FIRE ADMINISTRATION

LN	Description / Account	Qty	Unit Price	Net Price
	Ship To FIRE CENTRAL SUPPLY 2851 OLD SHELL ROAD MOBILE, AL 36607 Delivery Reference VICTORIA RICHARDSON Deliver To FIRE CENTRAL SUPPLY 2851 OLD SHELL ROAD MOBILE, AL 36607			
028	RESCUE EQUIPMENT, AS SPECIFIED: Holmatro Omnishore RS15 Shoring Hammer ITEM #151.004.109 PER QUOTE Q990826052146655 Vendor Item	4.00 EACH	168.00000	672.00
	1 1000.30.15.1510.1510.1510.0000.0000.47020.			672.00
	Ship To FIRE CENTRAL SUPPLY 2851 OLD SHELL ROAD MOBILE, AL 36607 Delivery Reference VICTORIA RICHARDSON Deliver To FIRE CENTRAL SUPPLY			

Bill To	Requisition 00013829-00 FY 2026
ACCOUNTS PAYABLE P O BOX 389 MOBILE, AL 36601 vendorinvoices@cityofmobile.org	Acct No: 1000.30.15.1510.1510.1510.0000.0000.47020. Review: Buyer: 910521901 Status: Approved

Vendor	Ship To
NORTH AMERICAN FIRE EQUIPMENT CO INC PO Box 2928 DECATUR, AL 35602 USA Tel#256-353-7100 Fax 256-355-0852	FIRE CENTRAL SUPPLY 2851 OLD SHELL ROAD MOBILE, AL 36607 RICHARDSONV@CITYOFMOBILE.GOV Delivery Reference VICTORIA RICHARDSON Deliver To FIRE CENTRAL SUPPLY 2851 OLD SHELL ROAD MOBILE, AL 36607

Date Ordered	Vendor Number	Date Required	Ship Via	Terms	Department
06/11/26	149290				FIRE ADMINISTRATION

LN	Description / Account	Qty	Unit Price	Net Price
	2851 OLD SHELL ROAD MOBILE, AL 36607			
029	RESCUE EQUIPMENT, AS SPECIFIED: Holmatro Omnishore RBL80 Ratchet Belt ITEM #151.002.326 PER QUOTE Q990826052146655 Vendor Item	6.00 EACH	33.00000	198.00
	1 1000.30.15.1510.1510.1510.0000.0000.47020.			198.00
	Ship To FIRE CENTRAL SUPPLY 2851 OLD SHELL ROAD MOBILE, AL 36607 Delivery Reference VICTORIA RICHARDSON Deliver To FIRE CENTRAL SUPPLY 2851 OLD SHELL ROAD MOBILE, AL 36607			
030	RESCUE EQUIPMENT, AS SPECIFIED: Holmatro Nut Winder MNW80 ITEM #151.002.325 PER QUOTE Q990826052146655 Vendor Item	2.00 EACH	390.00000	780.00

Bill To	Requisition 00013829-00 FY 2026
ACCOUNTS PAYABLE P O BOX 389 MOBILE, AL 36601 vendorinvoices@cityofmobile.org	Acct No: 1000.30.15.1510.1510.1510.0000.0000.47020. Review: Buyer: 910521901 Status: Approved Page 21

Vendor	Ship To
NORTH AMERICAN FIRE EQUIPMENT CO INC PO Box 2928 DECATUR, AL 35602 USA Tel#256-353-7100 Fax 256-355-0852	FIRE CENTRAL SUPPLY 2851 OLD SHELL ROAD MOBILE, AL 36607 RICHARDSONV@CITYOFMOBILE.GOV Delivery Reference VICTORIA RICHARDSON Deliver To FIRE CENTRAL SUPPLY 2851 OLD SHELL ROAD MOBILE, AL 36607

Date Ordered	Vendor Number	Date Required	Ship Via	Terms	Department
06/11/26	149290				FIRE ADMINISTRATION

LN	Description / Account	Qty	Unit Price	Net Price
1	1000.30.15.1510.1510.1510.0000.0000.47020.			780.00

Ship To
FIRE CENTRAL SUPPLY
2851 OLD SHELL ROAD
MOBILE, AL 36607
Delivery Reference
VICTORIA RICHARDSON

Deliver To
FIRE CENTRAL SUPPLY
2851 OLD SHELL ROAD
MOBILE, AL 36607

031	FREIGHT	1.00 EACH	3000.00000	3000.00

Additional Description Notes

PER QUOTE Q990826052146655
Vendor Item
Inventory Item/Loc 14009

1 1000.30.15.1510.1510.1510.0000.0000.47020. 3000.00

Bill To	Requisition 00013829-00 FY 2026
ACCOUNTS PAYABLE P O BOX 389 MOBILE, AL 36601 vendorinvoices@cityofmobile.org	Acct No: 1000.30.15.1510.1510.1510.0000.0000.47020. Review: Buyer: 910521901 Status: Approved Page 22

Vendor	Ship To
NORTH AMERICAN FIRE EQUIPMENT CO INC PO Box 2928 DECATUR, AL 35602 USA Tel#256-353-7100 Fax 256-355-0852	FIRE CENTRAL SUPPLY 2851 OLD SHELL ROAD MOBILE, AL 36607 RICHARDSONV@CITYOFMOBILE.GOV Delivery Reference VICTORIA RICHARDSON Deliver To FIRE CENTRAL SUPPLY 2851 OLD SHELL ROAD MOBILE, AL 36607

Date Ordered	Vendor Number	Date Required	Ship Via	Terms	Department
06/11/26	149290				FIRE ADMINISTRATION

LN	Description / Account	Qty	Unit Price	Net Price

Ship To
FIRE CENTRAL SUPPLY
2851 OLD SHELL ROAD
MOBILE, AL 36607
Delivery Reference
VICTORIA RICHARDSON

Deliver To
FIRE CENTRAL SUPPLY
2851 OLD SHELL ROAD
MOBILE, AL 36607

Requisition Link

Requisition Total 108573.00

***** General Ledger Summary Section *****

Account	Amount	Remaining Budget
1000.30.15.1510.1510.1510.0000.0000.47020.	108573.00	1300489.16
FIRE ADMINISTRATION EXP	EQUIPMENT (LESS THAN $5000)	

***** Approval/Conversion Info *****

Activity	Date	Clerk	Comment
Approved	06/18/26	DONALD ROSE	Auto approved by: 910521901
Approved	06/18/26	SANDRA LEWIS	Auto approved by: 910521901
Approved	06/18/26	STEVEN KRONINGER	Auto approved by: 910521901
Approved	06/18/26	MARYLYN BUSCHELL	Auto approved by: 910521901
Approved	06/18/26	JAMES NEESE	Auto approved by: 910521901
Approved	06/18/26	PATRICIA KENNEDY-JONES	Auto approved by: 910521901
Approved	06/18/26	REBECCA CRUMPLER	

Bill To	Requisition 00013829-00 FY 2026
ACCOUNTS PAYABLE P O BOX 389 MOBILE, AL 36601 vendorinvoices@cityofmobile.org	Acct No: 1000.30.15.1510.1510.1510.0000.0000.47020. Review: Buyer: 910521901 Status: Approved Page 23

Vendor	Ship To
NORTH AMERICAN FIRE EQUIPMENT CO INC PO Box 2928 DECATUR, AL 35602 USA Tel#256-353-7100 Fax 256-355-0852	FIRE CENTRAL SUPPLY 2851 OLD SHELL ROAD MOBILE, AL 36607 RICHARDSONV@CITYOFMOBILE.GOV Delivery Reference VICTORIA RICHARDSON Deliver To FIRE CENTRAL SUPPLY 2851 OLD SHELL ROAD MOBILE, AL 36607

Date Ordered	Vendor Number	Date Required	Ship Via	Terms	Department
06/11/26	149290				FIRE ADMINISTRATION

LN	Description / Account			Qty	Unit Price	Net Price
	Approved	06/18/26	ANNE FOLEY		Auto approved by: 910521901	
	Approved	06/18/26	JOHN PAINE		Auto approved by: 910521901	

Authorized By: _____ Date: _____
Signature

LEAGUE OF OREGON CITIES
FIRE FIGHTING EQUIPMENT, SCBA, AND PROTECTIVE GEAR
Solicitation No. 2555

Intent

The League of Oregon Cities (LOC) served as Lead Agency to solicit proposals for Fire Fighting Equipment, SCBA, and Protective Gear. LOC works in cooperation with National Purchasing Partners ("NPP") and its Government Division, dba NPPGov, dba Public Safety GPO, and dba Law Enforcement GPO (collectively hereinafter "NPPGov"), to service the LOC and NPPGov membership. The published Request for Proposal (RFP) contained provisions that permitted all members of LOC and NPPGov throughout the nation to "piggy-back" off the resulting Master Price Agreement.

Determination for issuing RFP vs. Sealed Bid

LOC has determined that it is advantageous for LOC to procure Fire Fighting Equipment, SCBA, and Protective Gear using a secure competitive RFP process evaluated based on "best value" rather than sealed bidding. Sealed bidding limits evaluation of offers solely to compliance with the requirements, provides no opportunity to compare the product and service offerings among the vendors, and uses price as the predominant deciding factor. Such limitations prevent LOC from awarding the most advantageous contract(s) to LOC and its members.

Procedure

LOC issued an RFP (2555) on September 15, 2025.

The RFP was posted to the following websites: orcities.org and nppgov.com on September 15, 2025.

The RFP was published in the Daily Journal of Commerce on September 15, 2025.

The RFP was published in USA Today on September 15, 2025.

The RFP Close Date was extended on November 14, 2025.

The RFP closed on December 5, 2025.

The RFP was awarded on January 29, 2026.

The RFP was posted to the following websites: orcities.org and nppgov.com.

The text of the published notice of solicitation is as follows:

League of Oregon Cities (LOC)
NOTICE OF SOLICITATION

LOC intends to enter into a master price agreement to procure the following products and services for LOC members and make them available to all members of the national cooperative purchasing program, National Purchasing Partners, LLC ("NPPGov").

CONNECTIVITY SOLUTIONS FOR PUBLIC SAFETY AND GOVERNMENT #2550

FIRE FIGHTING EQUIPMENT, SCBA, AND PROTECTIVE GEAR #2555

FIRE APPARATUS, AMBULANCE, AND OTHER FIRST RESPONDER VEHICLES, ACCESSORIES, AND SERVICE #2560

Responses Due November 14, 2025

For information or a copy of the Request for Proposal, contact LOC at rfp@orcities.org or download it from orcities.org.

MCA russell johns NWBOC

September 15, 2025

Affidavit of Publication

To Whom It May Concern:
I am a duly authorized representative of MCA Russell Johns Associates LLC, the company handling the advertising matters for USA Today a daily newspaper distributed within the United States.

A public notice ad was placed by League of Oregon Cities (RFP #2550 #2555#2540 #2560) and was published in said newspaper within the marketplace section of the National USA Today Marketplace on September 15, 2025.

Anthony Pacini

On this 15th day of September, I attest that the attached document is a true, exact, complete, and unaltered tearsheet.

Notary

EL-SABETH KIDWELL
Notary Public - State of Florida
Commission # HH 517155
My Comm. Expires Apr 17, 2028
Bonded through National Notary Assn.

LEAGUE OF OREGON CITIES
MUTLIPLE SOLICITATIONS
Responses Due
November 14, 2025
NOTICE OF SOLICITATION

LOC intends to enter into a mas er price agreement to procure the ollowing products and services fo .OC members and make them avail ıble to all members of the naliona :ooperative purchasing program ıational Purchasing Partners, LLC "NPPGov").

CONNECTIVITY SOLUTIONS :OR PUBLIC SAFETY AND GOV :RNMENT #2550

FIRE FIGHTING EQUIPMENT SCBA, AND PROTECTIVE GEAF '2555

FIRE APPARATUS, AMBU .ANCE, AND OTHER FIRST RE SPONDER VEHICLES, ACCESSO 'IES, AND SERVICE #2560

Responses Due November 14 :025

For information or a copy of the Re quest for Proposal, contact LOC a fp@orcities.org or download it fron ırcities.org

Published Sep 15, 2025 4091249

Daily Journal of Commerce
1618 SW First Ave., Suite 400
Portland, OR, 97201
Phone: 503-226-1311 Fax: 503-222-5358

DJC OREGON

Affidavit of Publication

To: National Purchasing Partners - Marshall Stiles
17930 International Blvd, Ste 900
Seattle, WA, 98188

Re: Legal Notice 4091249, CONNECTIVITY SOLUTIONS FOR PUBLIC SAFETY AND GOVERNMENT #2550

State of OR } } SS:
County of Multnomah }

I, Michelle A. Ropp, being duly sworn, depose and say that I am the Principal Clerk of the Daily Journal of Commerce, a newspaper of general circulation in the counties of CLACKAMAS, MULTNOMAH, and WASHINGTON as defined by ORS 193.010 and 193.020, published in Portland in the aforesaid County and State; that I know from my personal knowledge that the notice described as:
CONNECTIVITY SOLUTIONS FOR PUBLIC SAFETY AND GOVERNMENT #2550
LEAGUE OF OREGON CITIES
a printed copy of which is hereto annexed, was published in the entire issue of said newspaper 1 time(s) in the following issues:
09/15/2025

SEE EXHIBIT A

State of Oregon
County of Multnomah

SIGNED OR ATTESTED BEFORE ME ON 17th day of September 2025

By: Michelle A. Ropp
Michelle A. Ropp

By: N. Bjork

OFFICIAL STAMP
NICHOLAS BJORK
NOTARY PUBLIC - OREGON
COMMISSION NO. 1044188
MY COMMISSION EXPIRES JANUARY 10, 2028

Nicholas Bjork
Notary Public, State of OR
No. 1044188
My commission expires on January 10, 2028

LOC received a proposal from the following vendor(s):

Allstar Fire Equipment
Arctic Compressor
Avon Protection Systems
Bauer Compressors Inc.
Bauer Compressors - San Francisco
Baysingers Uniforms and Equipment
Casco Industries
Chief 360
Circul-Air
Emergency Equipment Professionals
FireTech
First Due
GearGrid
HAIX
Thin Red Line Decon (withdrawn)
Holmatro
Innotex
L.N. Curtis & sons
Lanco North America
Life-Assist Inc. (withdrawn)
LION First Responders PPE
MES Life Safety
Municipal Equipment Company (Meco Fire)
North America Fire Equipment Co. (NAFECO)
Seek Thermal
Sentinel
Sunbelt Fire
Ten-8 Fire & Safety
Toxic Suppression
Veridian Fire Protective Gear
W.S. Darley & Co.

LOC evaluated proposals against the criteria in the RFP. LOC awarded the following proposer(s):

Allstar Fire Equipment
Arctic Compressor
Avon Protection Systems
Bauer Compressors Inc.
Bauer Compressors - San Francisco
Baysingers Uniforms and Equipment
Chief 360
Circul-Air
Emergency Equipment Professionals
First Due
GearGrid
HAIX
Holmatro
Innotex
L.N. Curtis & sons
Lanco North America
LION First Responders PPE
MES Life Safety
Municipal Equipment Company (Meco Fire)
North America Fire Equipment Co. (NAFECO)
Seek Thermal
Sunbelt Fire
Ten-8 Fire & Safety
Toxic Suppression
Veridian Fire Protective Gear
W.S. Darley & Co.

Evaluation

The evaluation was based on the following criteria as described in the RFP (weighted):

Component Evaluated	Weight
Pricing: Product price and discounts proposed included favorable pricing for cooperative purchasing. Shipping conditions. *PPW Section 7.0 and Attachment D.*	25
Product Line (Score only categories proposed): Breadth, variety, quality of product line and innovation of products. Warranty availability. *PPW Section 9.0 and Attachment C.*	15
Marketing: Marketing plan to promote the resulting contractual agreement and ability to incorporate use of agreement in their sales system throughout indicated coverage region. Willingness to allow training of salesforce. *PPW Section 4.0.*	15
Customer Service: Support dedicated to Participating Agencies. Ability to meet promised delivery timelines. Additional services offered. Conduct e-commerce. *PPW Sub-Sections 2.3 & 2.4 and Section 6.0.*	15
Proven Experience: Success in providing products and services in a timely manner. Years in business, references, and reputation. Experience with cooperative purchasing. *PPW Sub-Section 1.2.*	15
Coverage: Ability to provide products and services for indicated coverage region including distribution, retail & service facilities, coordination of manufacturer and distribution, and staff availability. Clearly states distribution model and provides dealer list if applicable. *PPW Section 3.0 and Exhibit 1.*	10
Conformance: Completeness of proposal and the degree to which the Proposer responded to the terms and all requirements and specifications of the RFP. Followed the response format and content, was clear and easily understood. Provided Term's and Condition's, if applicable. *PPW Section 8.0 and 4.5 of RFP.*	5
TOTAL	100

Number of Proposers	Proposer	Pricing Score	Product Line Score	Marketing Score	Customer Service Score	Proven Experience Score	Coverage Score	Conformance Score	Total Score	Rank
1	Allstar Fire Equipment	108	50	40	40	45	30	17	330	26
2	Arctic Compressor	75	50	55	50	55	33	18	337	23
3	Avon Protection Systems	100	60	60	60	65	40	20	405	1
4	Bauer Compressors - San Francisco	108	55	50	50	60	33	18	375	8
5	Bauer Compressors Inc.	100	55	45	50	55	33	17	355	18
6	Baysingers Uniforms and Equipment	108	55	50	60	55	30	17	375	8
7	Casco Industries	92	55	40	45	40	33	15	320	27
8	Chief 360	100	50	55	50	50	33	18	357	16
9	Circul-Air	92	60	55	50	60	37	17	370	11
10	Emergency Equipment Professionals	100	55	50	45	40	30	15	335	25
11	FireTech	0	0	0	0	0	0	0	0	29
12	First Due	92	55	45	50	50	33	17	342	21
13	GearGrid	83	60	50	50	60	37	17	357	16
14	HAIX	108	55	45	55	55	33	17	368	13
15	Holmatro	92	65	50	50	55	37	18	367	14
16	Innotex	108	60	55	55	60	37	18	393	5
17	L.N. Curtis & sons	117	65	55	60	60	30	18	405	1
18	Lanco North America	83	55	45	45	55	37	18	338	22
19	LION First Responders PPE	108	60	60	55	55	40	18	397	4
20	MES Service Company	100	60	45	50	50	30	17	352	20
21	Municipal Equipment Company	108	60	45	50	60	33	17	373	10
22	North America Fire Equipment Co.	108	60	55	55	60	33	18	390	6
23	Seek Thermal	92	45	65	50	60	33	17	362	15
24	Sentinel	100	45	45	45	45	23	15	318	28
25	Sunbelt Fire	100	55	45	45	60	33	17	355	18
26	Ten-8 Fire & Safety	108	55	60	55	60	23	18	380	7
27	Toxic Suppression	92	55	50	45	45	33	17	337	23
28	Veridian Fire Protective Gear	100	60	45	55	60	33	17	370	11
29	W.S. Darley & Co.	108	65	60	55	60	37	20	405	1

Pricing Structure

Allstar Fire Equipment: Proposer provided a discount off list price. See Price List Attachment in the resulting Master Price Agreement.

Arctic Compressor: Proposer provided a discount off list price. See Price List Attachment in the resulting Master Price Agreement.

Avon Protection Systems: Proposer provided a fixed pricing structure. See Price List Attachment in the resulting Master Price Agreement.

Bauer Compressors - San Francisco: Proposer provided a discount off list price. See Price List Attachment in the resulting Master Price Agreement.

Bauer Compressors Inc.: Proposer provided a discount off list price. See Price List Attachment in the resulting Master Price Agreement.

Baysingers Uniforms and Equipment: Proposer provided a discount off list price. See Price List Attachment in the resulting Master Price Agreement.

Chief 360: Proposer provided a discount off list price. See Price List Attachment in the resulting Master Price Agreement.

Circul-Air: Proposer provided a discount off list price. See Price List Attachment in the resulting Master Price Agreement.

Emergency Equipment Professionals: Proposer provided a discount off list price. See Price List Attachment in the resulting Master Price Agreement.

First Due: Proposer provided a discount off list price. See Price List Attachment in the resulting Master Price Agreement.

GearGrid: Proposer provided a discount off list price. See Price List Attachment in the resulting Master Price Agreement.

HAIX: Proposer provided a discount off list price. See Price List Attachment in the resulting Master Price Agreement.

Holmatro: Proposer provided a discount off list price. See Price List Attachment in the resulting Master Price Agreement

Innotex: Proposer provided a discount off list price. See Price List Attachment in the resulting Master Price Agreement.

L.N. Curtis: Proposer provided a discount off list price See Price List Attachment in the resulting Master Price Agreement.

Lanco: Proposer provided a fixed pricing structure. See Price List Attachment in the resulting Master Price Agreement.

LION: Proposer provided a discount off list price. See Price List Attachment in the resulting Master Price Agreement.

MES Service Company: Proposer provided a discount off list price. See Price List Attachment in the resulting Master Price Agreement.

MECO: Proposer provided a discount off list price. See Price List Attachment in the resulting Master Price Agreement.

NAFECO: Proposer provided a discount off list price. See Price List Attachment in the resulting Master Price Agreement.

Seek Thermal: Proposer provided a discount off list price. See Price List Attachment in the resulting Master Price Agreement.

Sunbelt Fire: Proposer provided a discount off list price. See Price List Attachment in the resulting Master Price Agreement.

Ten-8: Proposer provided a discount off list price. See Price List Attachment in the resulting Master Price Agreement.

Toxic Suppression: Proposer provided a discount off list price. See Price List Attachment in the resulting Master Price Agreement.

Veridian: Proposer provided a discount off list price. See Price List Attachment in the resulting Master Price Agreement.

W.S. Darley: Proposer provided a discount off list price. See Price List Attachment in the resulting Master Price Agreement.

Additional Information

National Purchasing Partners
International Place, North Tower
17930 International Boulevard
Suite 900
SeaTac, WA 98188

Marshall Stiles, Contracts Manager
marshall.stiles@mynpp.com
nppgov.com

Location:
401 Adams Avenue, Suite 280
Montgomery, AL 36104-4338

Mailing Address:
P.O. Box 302251
Montgomery, AL 36130-2251
Telephone (334) 242-9200
Fax (334) 242-1775
www.examiners.alabama.gov

Rachel Laurie Riddle
Chief Examiner

December 23, 2025

Alabama County Commissions
Alabama Municipalities
City and County Boards of Education

To Whom It May Concern,

In accordance with Sections 16-13B-2(a)(13) and 41-16-51(a)(16), *Ala. Code* 1975, as amended by Act No. 2023-135, the Department has reviewed the competitive bidding process used by NPPGov, a national, governmental purchasing cooperative, for the contracts awarded as of the date of this letter. The Department did not identify any matters that were contrary to proper purchasing procedures or routine governmental procurement practices. Each contract was awarded by various governmental entities pursuant to the competitive bid laws in the state of the awarding authority.

Based on the Department's review, the competitive bid process used by NPPGov is approved for use through **December 31, 2026**. This approval authorizes the purchase, lease, or lease/purchase of certain goods or services, other than voice or data wireless communication services, when certain statutory conditions are fulfilled. See Sections 16-13B-2(a)(13) and 41-16-51(a)(16), *Ala. Code* 1975, as amended by Act No. 2023-135.

Prior to utilizing NPPGov, each governmental entity must verify that the goods or services to be purchased, leased, or lease/purchased are either not at the time available on the state purchasing program or are available at a price equal to or less than that on the state purchase program. *Id.* Any such purchases, leases, or lease/purchases must be made through a participating Alabama vendor holding an Alabama business license if such a vendor exists. *Id.* Any such vendor shall also comply with Section 41-16-51(a)(16)d, *Ala. Code* 1975 when applicable. Further, all purchases must comply with the requirements of *Uniform Guidance*.

Should the Department receive notice that NPPGov, its awarding authorities, or its awarded vendors are allowing Alabama governmental entities to make unauthorized purchases or other unlawful business transactions, NPPGov's competitive bid process approval will subject to immediate revocation by the Department.

Attention Counties and Municipalities:

Please be advised, this letter authorizes the purchase of materials or equipment that are otherwise part of a contract for "public works," as defined in Section 39-2-1(6), *Ala. Code*

1975, as long as the remaining portion of the public works project is subject to the requirements of Title 39, even if the remaining portion of the project would involve an amount less than $100,000 as a result of the exclusion of the purchase of the materials or equipment. See Section 39-2-2(m)(1) and (2), *Ala. Code* 1975, as amended by Act 2023-497.

If the Department can be of further assistance, please let us know.

Sincerely,

Rachel Laurie Riddle
CHIEF EXAMINER

RLR/lbm

CAPITAL CONTRACT SUMMARY SHEET

AGENDA ITEM SUMMARY SHEET

Agenda of: July 7, 2026

Submitted by:
John Paine, Purchasing Agent

Sponsored by:
Spiro Cheriogotis, Mayor

Purpose and Scope of Project:
To approve issuance of purchase order to North American Fire Equipment Co Inc for Holmatro rescue equipment for MFRD.

Amount of Contract:
$119,994.00

Funding Source
Capital - Equipment Fire Dept

ATTACHMENTS:
1. 20260618 NAFECO2 Agenda Package POs

REVIEWERS:
Lana Pafenbach
Lana Pafenbach

AGENDA ITEM SUMMARY SHEET

Agenda of: 23 June 2026 (Date) Item No. _____

Submitted by: Procurement (Department) John Paine, Purchasing Agent (Department Head)

Sponsored by: Spiro N. Cheriogotis (Name) Mayor (Title)

Reviewed by: _____ (Executive Director)

Routing Authorized: James Barber (Mayor's Office) _____ (Date)

A brief synopsis and explanation of the following:

PROJECT NAME: Approval of Purchase Order to North American Fire Equipment Co Inc

PURPOSE & SCOPE OF PROJECT:
To approve issuance of purchase order to North American Fire Equipment Co Inc for Holmatro rescue equipment for MFRD.
Capital - Equipment Fire Dept

RESOLUTION ☒ ORDINANCE ☐ OTHER ☐

AMOUNT OF CONTRACT: $119,994.00

FUNDING SOURCE:

Budget Item: See Requisitions Discretionary Funds: _____

Budget amendment: REDUCE ☐ INCREASED ☐

Grant funds: _____ Matching funds: _____

Associated Costs:

Current year (itemize)
Type: _____ Amount: _____

Future years
Year: _____ Amount: _____

**If Cost will continue, write "indefinite" and list project annual-cost.*

Effective date of contract: On issuance to vendor.

Renewal date of contract (if applicable): _____

If not bid, state reason: NPPGov cooperative purchasing agreement, not on state contract.

How many bidders received bid packages (if applicable): na

How many bidders submitted bids (if applicable): na

If this is not the lowest bid, explain why not:

RESOLUTION

Sponsored by: Mayor Spiro N. Cheriogotis

BE IT RESOLVED BY THE CITY COUNCIL OF MOBILE, ALABAMA, that the Purchasing Agent is authorized to execute, for and on behalf of the City of Mobile, a purchase order to the indicated vendor in the approximate amount stated, and to approve the supporting bid award if required, for the following requisition as indicated below and attached herein:

Requisition	Fiscal Year	Department	Description	Amount	Vendor
13515	2026	(1510) FIRE ADMINISTRATION	HOLMATRO RESCUE EQUIPMENT FOR MFRD (NPPGOV COOPERATIVE PURCHASING AGREEMENT, NOT ON STATE CONTRACT)	$119,994.00	(149290) NORTH AMERICAN FIRE EQUIPMENT CO INC

Adopted:

_____

City Clerk

Bill To	Requisition 00013515-00 FY 2026
ACCOUNTS PAYABLE P O BOX 389 MOBILE, AL 36601 vendorinvoices@cityofmobile.org	Acct No: 2000.80.00.0000.0000.0000.0000.0000.47010. Review: Buyer: 910521901 Status: Approved Page 1

Vendor	Ship To
NORTH AMERICAN FIRE EQUIPMENT CO INC PO Box 2928 DECATUR, AL 35602 USA Tel#256-353-7100 Fax 256-355-0852	FIRE CENTRAL SUPPLY 2851 OLD SHELL ROAD MOBILE, AL 36607 RICHARDSONV@CITYOFMOBILE.GOV Delivery Reference VICTORIA RICHARDSON Deliver To FIRE CENTRAL SUPPLY 2851 OLD SHELL ROAD MOBILE, AL 36607

Date Ordered	Vendor Number	Date Required	Ship Via	Terms	Department
06/11/26	149290				FIRE ADMINISTRATION

LN	Description / Account	Qty	Unit Price	Net Price
	General Notes			
	AS PER YOUR QUOTE: Q990826052146655 PER NPP.GOV CONTRACT# PS26180			
001	RESCUE EQUIP/SUP/ACC AS SPECIFIED: Holmatro M10 Mechanical Strut; NFPA ITEM #151.004.920 PER QUOTE Q990826052146655 Vendor Item	12.00 EACH	1055.00000	12660.00
	1 2000.80.00.0000.0000.0000.0000.0000.47010. E E0040 .CAPEQUIPMT. .			12660.00
	Ship To FIRE CENTRAL SUPPLY 2851 OLD SHELL ROAD MOBILE, AL 36607 Delivery Reference VICTORIA RICHARDSON Deliver To FIRE CENTRAL SUPPLY 2851 OLD SHELL ROAD MOBILE, AL 36607			
002	RESCUE EQUIP/SUP/ACC AS SPECIFIED: Holmatro Omnishore Strut P20 ITEM	12.00 EACH	1222.00000	14664.00

Bill To	Requisition 00013515-00 FY 2026
ACCOUNTS PAYABLE P O BOX 389 MOBILE, AL 36601 vendorinvoices@cityofmobile.org	Acct No: 2000.80.00.0000.0000.0000.0000.0000.47010. Review: Buyer: 910521901 Status: Approved Page 2

Vendor	Ship To
NORTH AMERICAN FIRE EQUIPMENT CO INC PO Box 2928 DECATUR, AL 35602 USA Tel#256-353-7100 Fax 256-355-0852	FIRE CENTRAL SUPPLY 2851 OLD SHELL ROAD MOBILE, AL 36607 RICHARDSONV@CITYOFMOBILE.GOV Delivery Reference VICTORIA RICHARDSON Deliver To FIRE CENTRAL SUPPLY 2851 OLD SHELL ROAD MOBILE, AL 36607

Date Ordered	Vendor Number	Date Required	Ship Via	Terms	Department
06/11/26	149290				FIRE ADMINISTRATION

LN	Description / Account	Qty	Unit Price	Net Price
	#151.001.606 PER QUOTE Q990826052146655 Vendor Item			
1	2000.80.00.0000.0000.0000.0000.0000.47010. E E0040 .CAPEQUIPMT. .			14664.00
	Ship To FIRE CENTRAL SUPPLY 2851 OLD SHELL ROAD MOBILE, AL 36607 Delivery Reference VICTORIA RICHARDSON Deliver To FIRE CENTRAL SUPPLY 2851 OLD SHELL ROAD MOBILE, AL 36607			
003	RESCUE EQUIP/SUP/ACC AS SPECIFIED: Holmatro Omnishore PM30 Pneumatic Strut ITEM #151.002.159 PER QUOTE Q990826052146655 Vendor Item	12.00 EACH	1397.50000	16770.00
1	2000.80.00.0000.0000.0000.0000.0000.47010. E E0040 .CAPEQUIPMT. .			16770.00

Bill To	Requisition 00013515-00 FY 2026
ACCOUNTS PAYABLE P O BOX 389 MOBILE, AL 36601 vendorinvoices@cityofmobile.org	Acct No: 2000.80.00.0000.0000.0000.0000.0000.47010. Review: Buyer: 910521901 Status: Approved Page 3

Vendor	Ship To
NORTH AMERICAN FIRE EQUIPMENT CO INC PO Box 2928 DECATUR, AL 35602 USA Tel#256-353-7100 Fax 256-355-0852	FIRE CENTRAL SUPPLY 2851 OLD SHELL ROAD MOBILE, AL 36607 RICHARDSONV@CITYOFMOBILE.GOV Delivery Reference VICTORIA RICHARDSON Deliver To FIRE CENTRAL SUPPLY 2851 OLD SHELL ROAD MOBILE, AL 36607

Date Ordered	Vendor Number	Date Required	Ship Via	Terms	Department
06/11/26	149290				FIRE ADMINISTRATION

LN	Description / Account	Qty	Unit Price	Net Price
	Ship To FIRE CENTRAL SUPPLY 2851 OLD SHELL ROAD MOBILE, AL 36607 Delivery Reference VICTORIA RICHARDSON Deliver To FIRE CENTRAL SUPPLY 2851 OLD SHELL ROAD MOBILE, AL 36607			
004	RESCUE EQUIP/SUP/ACC AS SPECIFIED: Holmatro Omnishore Strut P40 ITEM #151.002.023 PER QUOTE Q990826052146655 Vendor Item	12.00 EACH	1570.00000	18840.00
	1 2000.80.00.0000.0000.0000.0000.0000.47010. E E0040 .CAPEQUIPMT. .			18840.00
	Ship To FIRE CENTRAL SUPPLY 2851 OLD SHELL ROAD MOBILE, AL 36607 Delivery Reference VICTORIA RICHARDSON Deliver To			

Bill To	Requisition 00013515-00 FY 2026
ACCOUNTS PAYABLE P O BOX 389 MOBILE, AL 36601 vendorinvoices@cityofmobile.org	Acct No: 2000.80.00.0000.0000.0000.0000.0000.47010. Review: Buyer: 910521901 Status: Approved Page 4

Vendor	Ship To
NORTH AMERICAN FIRE EQUIPMENT CO INC PO Box 2928 DECATUR, AL 35602 USA Tel#256-353-7100 Fax 256-355-0852	FIRE CENTRAL SUPPLY 2851 OLD SHELL ROAD MOBILE, AL 36607 RICHARDSONV@CITYOFMOBILE.GOV Delivery Reference VICTORIA RICHARDSON Deliver To FIRE CENTRAL SUPPLY 2851 OLD SHELL ROAD MOBILE, AL 36607

Date Ordered	Vendor Number	Date Required	Ship Via	Terms	Department
06/11/26	149290				FIRE ADMINISTRATION

LN	Description / Account	Qty	Unit Price	Net Price
	FIRE CENTRAL SUPPLY 2851 OLD SHELL ROAD MOBILE, AL 36607			
005	RESCUE EQUIP/SUP/ACC AS SPECIFIED: Holmatro Omnishore P60 Pneumatic Strut ITEM #151.002.160 PER QUOTE Q990826052146655 Vendor Item	18.00 EACH	2092.00000	37656.00
	1 2000.80.00.0000.0000.0000.0000.0000.47010. E E0040 .CAPEQUIPMT. .			37656.00
	Ship To FIRE CENTRAL SUPPLY 2851 OLD SHELL ROAD MOBILE, AL 36607 Delivery Reference VICTORIA RICHARDSON Deliver To FIRE CENTRAL SUPPLY 2851 OLD SHELL ROAD MOBILE, AL 36607			
006	RESCUE EQUIP/SUP/ACC AS SPECIFIED: Holmatro Omnishore H20 OmniLock Hydraulic Strut ITEM #151.002.166 PER QUOTE Q990826052146655	4.00 EACH	3635.00000	14540.00

Bill To	Requisition 00013515-00 FY 2026
ACCOUNTS PAYABLE P O BOX 389 MOBILE, AL 36601 vendorinvoices@cityofmobile.org	Acct No: 2000.80.00.0000.0000.0000.0000.0000.47010. Review: Buyer: 910521901 Status: Approved Page 5

Vendor	Ship To
NORTH AMERICAN FIRE EQUIPMENT CO INC PO Box 2928 DECATUR, AL 35602 USA Tel#256-353-7100 Fax 256-355-0852	FIRE CENTRAL SUPPLY 2851 OLD SHELL ROAD MOBILE, AL 36607 RICHARDSONV@CITYOFMOBILE.GOV Delivery Reference VICTORIA RICHARDSON Deliver To FIRE CENTRAL SUPPLY 2851 OLD SHELL ROAD MOBILE, AL 36607

Date Ordered	Vendor Number	Date Required	Ship Via	Terms	Department
06/11/26	149290				FIRE ADMINISTRATION

LN	Description / Account Vendor Item	Qty	Unit Price	Net Price
1	2000.80.00.0000.0000.0000.0000.0000.47010. E E0040 .CAPEQUIPMT. .			14540.00
	Ship To FIRE CENTRAL SUPPLY 2851 OLD SHELL ROAD MOBILE, AL 36607 Delivery Reference VICTORIA RICHARDSON Deliver To FIRE CENTRAL SUPPLY 2851 OLD SHELL ROAD MOBILE, AL 36607			
013	RESCUE EQUIP/SUP/ACC AS SPECIFIED: Holmatro Omnishore Bipod Head POD01 ITEM #151.002.444 PER QUOTE Q990826052146655 Vendor Item	1.00 EACH	1784.00000	1784.00
1	2000.80.00.0000.0000.0000.0000.0000.47020. E E0040 .EQUIPUND5K. .			1784.00

Bill To	Requisition 00013515-00 FY 2026
ACCOUNTS PAYABLE P O BOX 389 MOBILE, AL 36601 vendorinvoices@cityofmobile.org	Acct No: 2000.80.00.0000.0000.0000.0000.0000.47010. Review: Buyer: 910521901 Status: Approved Page 6

Vendor	Ship To
NORTH AMERICAN FIRE EQUIPMENT CO INC PO Box 2928 DECATUR, AL 35602 USA Tel#256-353-7100 Fax 256-355-0852	FIRE CENTRAL SUPPLY 2851 OLD SHELL ROAD MOBILE, AL 36607 RICHARDSONV@CITYOFMOBILE.GOV Delivery Reference VICTORIA RICHARDSON Deliver To FIRE CENTRAL SUPPLY 2851 OLD SHELL ROAD MOBILE, AL 36607

Date Ordered	Vendor Number	Date Required	Ship Via	Terms	Department
06/11/26	149290				FIRE ADMINISTRATION

LN	Description / Account	Qty	Unit Price	Net Price
	Ship To FIRE CENTRAL SUPPLY 2851 OLD SHELL ROAD MOBILE, AL 36607 Delivery Reference VICTORIA RICHARDSON Deliver To FIRE CENTRAL SUPPLY 2851 OLD SHELL ROAD MOBILE, AL 36607			
014	RESCUE EQUIP/SUP/ACC AS SPECIFIED: Holmatro Omnishore Monopod Head POD01 ITEM #151.002.445 PER QUOTE Q990826052146655 Vendor Item	1.00 EACH	2570.00000	2570.00
	1 2000.80.00.0000.0000.0000.0000.0000.47020. E E0040 .EQUIPUND5K. .			2570.00
	Ship To FIRE CENTRAL SUPPLY 2851 OLD SHELL ROAD MOBILE, AL 36607 Delivery Reference VICTORIA RICHARDSON Deliver To			

Bill To	Requisition 00013515-00 FY 2026
ACCOUNTS PAYABLE P O BOX 389 MOBILE, AL 36601 vendorinvoices@cityofmobile.org	Acct No: 2000.80.00.0000.0000.0000.0000.0000.47010. Review: Buyer: 910521901 Status: Approved

Vendor	Ship To
NORTH AMERICAN FIRE EQUIPMENT CO INC PO Box 2928 DECATUR, AL 35602 USA Tel#256-353-7100 Fax 256-355-0852	FIRE CENTRAL SUPPLY 2851 OLD SHELL ROAD MOBILE, AL 36607 RICHARDSONV@CITYOFMOBILE.GOV Delivery Reference VICTORIA RICHARDSON Deliver To FIRE CENTRAL SUPPLY 2851 OLD SHELL ROAD MOBILE, AL 36607

Date Ordered	Vendor Number	Date Required	Ship Via	Terms	Department
06/11/26	149290				FIRE ADMINISTRATION

LN	Description / Account	Qty	Unit Price	Net Price
	FIRE CENTRAL SUPPLY 2851 OLD SHELL ROAD MOBILE, AL 36607			
020	RESCUE EQUIP/SUP/ACC AS SPECIFIED: Holmatro Omnishore PRS90 Pull Restrictor ITEM #151.004.117 PER QUOTE Q990826052146655 Vendor Item	5.00 EACH	102.00000	510.00
	1 2000.80.00.0000.0000.0000.0000.0000.47020. E E0040 .EQUIPUND5K. .			510.00
	Ship To FIRE CENTRAL SUPPLY 2851 OLD SHELL ROAD MOBILE, AL 36607 Delivery Reference VICTORIA RICHARDSON Deliver To FIRE CENTRAL SUPPLY 2851 OLD SHELL ROAD MOBILE, AL 36607			

Requisition Link

Requisition Total 119994.00

***** Project Ledger Summary Section *****

Account	Amount	Remaining Budget

Bill To	Requisition 00013515-00 FY 2026
ACCOUNTS PAYABLE P O BOX 389 MOBILE, AL 36601 vendorinvoices@cityofmobile.org	Acct No: 2000.80.00.0000.0000.0000.0000.0000.47010. Review: Buyer: 910521901 Status: Approved Page 8

Vendor	Ship To
NORTH AMERICAN FIRE EQUIPMENT CO INC PO Box 2928 DECATUR, AL 35602 USA Tel#256-353-7100 Fax 256-355-0852	FIRE CENTRAL SUPPLY 2851 OLD SHELL ROAD MOBILE, AL 36607 RICHARDSONV@CITYOFMOBILE.GOV Delivery Reference VICTORIA RICHARDSON Deliver To FIRE CENTRAL SUPPLY 2851 OLD SHELL ROAD MOBILE, AL 36607

Date Ordered	Vendor Number	Date Required	Ship Via	Terms	Department
06/11/26	149290				FIRE ADMINISTRATION

LN	Description / Account	Qty	Unit Price	Net Price
E	E0040 .CAPEQUIPMT. .		115130.00	3783.52
E	E0040 .EQUIPUND5K. .		4864.00	3783.52

***** General Ledger Summary Section *****

Account	Amount	Remaining Budget
2000.80.00.0000.0000.0000.0000.0000.47010. CAPITAL IMPROVEMENTS FUND EXP EQUIPMENT (GREATER $5000)	115130.00	1300489.16
2000.80.00.0000.0000.0000.0000.0000.47020. CAPITAL IMPROVEMENTS FUND EXP EQUIPMENT (LESS THAN $5000)	4864.00	1300489.16

***** Approval/Conversion Info *****

Activity	Date	Clerk	Comment
Approved	06/09/26	BRANDON JACKSON	Auto approved by: 910512538
Approved	06/09/26	BARRY GLISSON	
Approved	06/09/26	JAMES FRANK	Auto approved by: 910512538
Approved	06/11/26	BRANDON JACKSON	Auto approved by: 910512538
Approved	06/11/26	BARRY GLISSON	
Approved	06/11/26	JAMES FRANK	Auto approved by: 910512538
Rejected	06/10/26	BRENDA RHODES	Check funding sources
Approved	06/11/26	BRENDA RHODES	
Approved	06/11/26	TIFFANY HOLLINS	Auto approved by: 910511034
Approved	06/18/26	DONALD ROSE	Auto approved by: 910521901
Approved	06/18/26	SANDRA LEWIS	Auto approved by: 910521901
Approved	06/18/26	STEVEN KRONINGER	Auto approved by: 910521901
Approved	06/18/26	MARYLYN BUSCHELL	Auto approved by: 910521901
Approved	06/18/26	JAMES NEESE	Auto approved by: 910521901
Approved	06/18/26	PATRICIA KENNEDY-JONES	
Approved	06/18/26	REBECCA CRUMPLER	Auto approved by: 910521901
Approved	06/18/26	ANNE FOLEY	Auto approved by: 910521901

Bill To	Requisition 00013515-00 FY 2026
ACCOUNTS PAYABLE P O BOX 389 MOBILE, AL 36601 vendorinvoices@cityofmobile.org	Acct No: 2000.80.00.0000.0000.0000.0000.0000.47010. Review: Buyer: 910521901 Status: Approved Page 9

Vendor	Ship To
NORTH AMERICAN FIRE EQUIPMENT CO INC PO Box 2928 DECATUR, AL 35602 USA Tel#256-353-7100 Fax 256-355-0852	FIRE CENTRAL SUPPLY 2851 OLD SHELL ROAD MOBILE, AL 36607 RICHARDSONV@CITYOFMOBILE.GOV Delivery Reference VICTORIA RICHARDSON Deliver To FIRE CENTRAL SUPPLY 2851 OLD SHELL ROAD MOBILE, AL 36607

Date Ordered	Vendor Number	Date Required	Ship Via	Terms	Department
06/11/26	149290				FIRE ADMINISTRATION

LN	Description / Account	Qty	Unit Price	Net Price
	Approved 06/18/26 JOHN PAINE		Auto approved by: 910521901	

Authorized By: _____ Date: _____
Signature

LEAGUE OF OREGON CITIES
FIRE FIGHTING EQUIPMENT, SCBA, AND PROTECTIVE GEAR
Solicitation No. 2555

Intent

The League of Oregon Cities (LOC) served as Lead Agency to solicit proposals for Fire Fighting Equipment, SCBA, and Protective Gear. LOC works in cooperation with National Purchasing Partners ("NPP") and its Government Division, dba NPPGov, dba Public Safety GPO, and dba Law Enforcement GPO (collectively hereinafter "NPPGov"), to service the LOC and NPPGov membership. The published Request for Proposal (RFP) contained provisions that permitted all members of LOC and NPPGov throughout the nation to "piggy-back" off the resulting Master Price Agreement.

Determination for issuing RFP vs. Sealed Bid

LOC has determined that it is advantageous for LOC to procure Fire Fighting Equipment, SCBA, and Protective Gear using a secure competitive RFP process evaluated based on "best value" rather than sealed bidding. Sealed bidding limits evaluation of offers solely to compliance with the requirements, provides no opportunity to compare the product and service offerings among the vendors, and uses price as the predominant deciding factor. Such limitations prevent LOC from awarding the most advantageous contract(s) to LOC and its members.

Procedure

LOC issued an RFP (2555) on September 15, 2025.

The RFP was posted to the following websites: orcities.org and nppgov.com on September 15, 2025.

The RFP was published in the Daily Journal of Commerce on September 15, 2025.

The RFP was published in USA Today on September 15, 2025.

The RFP Close Date was extended on November 14, 2025.

The RFP closed on December 5, 2025.

The RFP was awarded on January 29, 2026.

The RFP was posted to the following websites: orcities.org and nppgov.com.

The text of the published notice of solicitation is as follows:

League of Oregon Cities (LOC)
NOTICE OF SOLICITATION

LOC intends to enter into a master price agreement to procure the following products and services for LOC members and make them available to all members of the national cooperative purchasing program, National Purchasing Partners, LLC ("NPPGov").

CONNECTIVITY SOLUTIONS FOR PUBLIC SAFETY AND GOVERNMENT #2550

FIRE FIGHTING EQUIPMENT, SCBA, AND PROTECTIVE GEAR #2555

FIRE APPARATUS, AMBULANCE, AND OTHER FIRST RESPONDER VEHICLES, ACCESSORIES, AND SERVICE #2560

Responses Due November 14, 2025

For information or a copy of the Request for Proposal, contact LOC at rfp@orcities.org or download it from orcities.org.

MCA russell johns NWBOC

September 15, 2025

Affidavit of Publication

To Whom It May Concern:
I am a duly authorized representative of MCA Russell Johns Associates LLC, the company handling the advertising matters for USA Today a daily newspaper distributed within the United States.

A public notice ad was placed by League of Oregon Cities (RFP #2550 #2555#2540 #2560) and was published in said newspaper within the marketplace section of the National USA Today Marketplace on September 15, 2025.

Anthony Pacini

On this 15th day of September, I attest that the attached document is a true, exact, complete, and unaltered tearsheet.

Notary

LEAGUE OF OREGON CITIES
MUTLIPLE SOLICITATIONS
Responses Due
November 14, 2025
NOTICE OF SOLICITATION

LOC intends to enter into a mas er price agreement to procure the ollowing products and services fo .OC members and make them avail ıble to all members of the nationa :ooperative purchasing program lational Purchasing Partners, LLC "NPPGov").

CONNECTIVITY SOLUTIONS :OR PUBLIC SAFETY AND GOV :RNMENT #2550

FIRE FIGHTING EQUIPMENT SCBA, AND PROTECTIVE GEAF !2555

FIRE APPARATUS, AMBU .ANCE, AND OTHER FIRST RE SPONDER VEHICLES, ACCESSO RIES, AND SERVICE #2560

Responses Due November 14 !025

For information or a copy of the Re quest for Proposal, contact LOC a fp@orcities.org or download it fron ırcities.org

Published Sep 15, 2025 409124!

Daily Journal of Commerce
1618 SW First Ave., Suite 400
Portland, OR, 97201
Phone: 503-226-1311 Fax: 503-222-5358

DJC OREGON

Affidavit of Publication

To: National Purchasing Partners - Marshall Stiles
17930 International Blvd, Ste 900
Seattle, WA, 98188

Re: Legal Notice 4091249, CONNECTIVITY SOLUTIONS FOR PUBLIC SAFETY AND GOVERNMENT #2550

State of OR)
) SS:
County of Multnomah)

I, Michelle A. Ropp, being duly sworn, depose and say that I am the Principal Clerk of the Daily Journal of Commerce, a newspaper of general circulation in the counties of CLACKAMAS, MULTNOMAH, and WASHINGTON as defined by ORS 193.010 and 193.020, published in Portland in the aforesaid County and State; that I know from my personal knowledge that the notice described as:
CONNECTIVITY SOLUTIONS FOR PUBLIC SAFETY AND GOVERNMENT #2550
LEAGUE OF OREGON CITIES
a printed copy of which is hereto annexed, was published in the entire issue of said newspaper 1 time(s) in the following issues:
09/15/2025

SEE EXHIBIT A

State of Oregon
County of Multnomah

SIGNED OR ATTESTED BEFORE ME ON 17th day of September 2025

By: Michelle A Ropp
Michelle A. Ropp

By: N. Bjork

OFFICIAL STAMP
NICHOLAS BJORK
NOTARY PUBLIC - OREGON
COMMISSION NO. 1044188
MY COMMISSION EXPIRES JANUARY 10, 2028

Nicholas Bjork
Notary Public, State of OR
No. 1044188
My commission expires on January 10, 2028

LOC received a proposal from the following vendor(s):

Allstar Fire Equipment
Arctic Compressor
Avon Protection Systems
Bauer Compressors Inc.
Bauer Compressors - San Francisco
Baysingers Uniforms and Equipment
Casco Industries
Chief 360
Circul-Air
Emergency Equipment Professionals
FireTech
First Due
GearGrid
HAIX
Thin Red Line Decon (withdrawn)
Holmatro
Innotex
L.N. Curtis & sons
Lanco North America
Life-Assist Inc. (withdrawn)
LION First Responders PPE
MES Life Safety
Municipal Equipment Company (Meco Fire)
North America Fire Equipment Co. (NAFECO)
Seek Thermal
Sentinel
Sunbelt Fire
Ten-8 Fire & Safety
Toxic Suppression
Veridian Fire Protective Gear
W.S. Darley & Co.

LOC evaluated proposals against the criteria in the RFP. LOC awarded the following proposer(s):

Allstar Fire Equipment
Arctic Compressor
Avon Protection Systems
Bauer Compressors Inc.
Bauer Compressors - San Francisco
Baysingers Uniforms and Equipment
Chief 360
Circul-Air
Emergency Equipment Professionals
First Due
GearGrid
HAIX
Holmatro
Innotex
L.N. Curtis & sons
Lanco North America
LION First Responders PPE
MES Life Safety
Municipal Equipment Company (Meco Fire)
North America Fire Equipment Co. (NAFECO)
Seek Thermal
Sunbelt Fire
Ten-8 Fire & Safety
Toxic Suppression
Veridian Fire Protective Gear
W.S. Darley & Co.

Evaluation

The evaluation was based on the following criteria as described in the RFP (weighted):

Component Evaluated	Weight
Pricing: Product price and discounts proposed included favorable pricing for cooperative purchasing. Shipping conditions. *PPW Section 7.0 and Attachment D.*	25
Product Line (Score only categories proposed): Breadth, variety, quality of product line and innovation of products. Warranty availability. *PPW Section 9.0 and Attachment C.*	15
Marketing: Marketing plan to promote the resulting contractual agreement and ability to incorporate use of agreement in their sales system throughout indicated coverage region. Willingness to allow training of salesforce. *PPW Section 4.0.*	15
Customer Service: Support dedicated to Participating Agencies. Ability to meet promised delivery timelines. Additional services offered. Conduct e-commerce. *PPW Sub-Sections 2.3 & 2.4 and Section 6.0.*	15
Proven Experience: Success in providing products and services in a timely manner. Years in business, references, and reputation. Experience with cooperative purchasing. *PPW Sub-Section 1.2.*	15
Coverage: Ability to provide products and services for indicated coverage region including distribution, retail & service facilities, coordination of manufacturer and distribution, and staff availability. Clearly states distribution model and provides dealer list if applicable. *PPW Section 3.0 and Exhibit 1.*	10
Conformance: Completeness of proposal and the degree to which the Proposer responded to the terms and all requirements and specifications of the RFP. Followed the response format and content, was clear and easily understood. Provided Term's and Condition's, if applicable. *PPW Section 8.0 and 4.5 of RFP.*	5
TOTAL	100

Number of Proposers	Proposer	Pricing Score	Product Line Score	Marketing Score	Customer Service Score	Proven Experience Score	Coverage Score	Conformance Score	Total Score	Rank
1	Allstar Fire Equipment	108	50	40	40	45	30	17	330	26
2	Arctic Compressor	75	50	55	50	55	33	18	337	23
3	Avon Protection Systems	100	60	60	60	65	40	20	405	1
4	Bauer Compressors - San Francisco	108	55	50	50	60	33	18	375	8
5	Bauer Compressors Inc.	100	55	45	50	55	33	17	355	18
6	Baysingers Uniforms and Equipment	108	55	50	60	55	30	17	375	8
7	Casco Industries	92	55	40	45	40	33	15	320	27
8	Chief 360	100	50	55	50	50	33	18	357	16
9	Circul-Air	92	60	55	50	60	37	17	370	11
10	Emergency Equipment Professionals	100	55	50	45	40	30	15	335	25
11	FireTech	0	0	0	0	0	0	0	0	29
12	First Due	92	55	45	50	50	33	17	342	21
13	GearGrid	83	60	50	50	60	37	17	357	16
14	HAIX	108	55	45	55	55	33	17	368	13
15	Holmatro	92	65	50	50	55	37	18	367	14
16	Innotex	108	60	55	55	60	37	18	393	5
17	L.N. Curtis & sons	117	65	55	60	60	30	18	405	1
18	Lanco North America	83	55	45	45	55	37	18	338	22
19	LION First Responders PPE	108	60	60	55	55	40	18	397	4
20	MES Service Company	100	60	45	50	50	30	17	352	20
21	Municipal Equipment Company	108	60	45	50	60	33	17	373	10
22	North America Fire Equipment Co.	108	60	55	55	60	33	18	390	6
23	Seek Thermal	92	45	65	50	60	33	17	362	15
24	Sentinel	100	45	45	45	45	23	15	318	28
25	Sunbelt Fire	100	55	45	45	60	33	17	355	18
26	Ten-8 Fire & Safety	108	55	60	55	60	23	18	380	7
27	Toxic Suppression	92	55	50	45	45	33	17	337	23
28	Veridian Fire Protective Gear	100	60	45	55	60	33	17	370	11
29	W.S. Darley & Co.	108	65	60	55	60	37	20	405	1

Pricing Structure

Allstar Fire Equipment: Proposer provided a discount off list price. See Price List Attachment in the resulting Master Price Agreement.

Arctic Compressor: Proposer provided a discount off list price. See Price List Attachment in the resulting Master Price Agreement.

Avon Protection Systems: Proposer provided a fixed pricing structure. See Price List Attachment in the resulting Master Price Agreement.

Bauer Compressors - San Francisco: Proposer provided a discount off list price. See Price List Attachment in the resulting Master Price Agreement.

Bauer Compressors Inc.: Proposer provided a discount off list price. See Price List Attachment in the resulting Master Price Agreement.

Baysingers Uniforms and Equipment: Proposer provided a discount off list price. See Price List Attachment in the resulting Master Price Agreement.

Chief 360: Proposer provided a discount off list price. See Price List Attachment in the resulting Master Price Agreement.

Circul-Air: Proposer provided a discount off list price. See Price List Attachment in the resulting Master Price Agreement.

Emergency Equipment Professionals: Proposer provided a discount off list price. See Price List Attachment in the resulting Master Price Agreement.

First Due: Proposer provided a discount off list price. See Price List Attachment in the resulting Master Price Agreement.

GearGrid: Proposer provided a discount off list price. See Price List Attachment in the resulting Master Price Agreement.

HAIX: Proposer provided a discount off list price. See Price List Attachment in the resulting Master Price Agreement.

Holmatro: Proposer provided a discount off list price. See Price List Attachment in the resulting Master Price Agreement

Innotex: Proposer provided a discount off list price. See Price List Attachment in the resulting Master Price Agreement.

L.N. Curtis: Proposer provided a discount off list price See Price List Attachment in the resulting Master Price Agreement.

Lanco: Proposer provided a fixed pricing structure. See Price List Attachment in the resulting Master Price Agreement.

LION: Proposer provided a discount off list price. See Price List Attachment in the resulting Master Price Agreement.

MES Service Company: Proposer provided a discount off list price. See Price List Attachment in the resulting Master Price Agreement.

MECO: Proposer provided a discount off list price. See Price List Attachment in the resulting Master Price Agreement.

NAFECO: Proposer provided a discount off list price. See Price List Attachment in the resulting Master Price Agreement.

Seek Thermal: Proposer provided a discount off list price. See Price List Attachment in the resulting Master Price Agreement.

Sunbelt Fire: Proposer provided a discount off list price. See Price List Attachment in the resulting Master Price Agreement.

Ten-8: Proposer provided a discount off list price. See Price List Attachment in the resulting Master Price Agreement.

Toxic Suppression: Proposer provided a discount off list price. See Price List Attachment in the resulting Master Price Agreement.

Veridian: Proposer provided a discount off list price. See Price List Attachment in the resulting Master Price Agreement.

.

W.S. Darley: Proposer provided a discount off list price. See Price List Attachment in the resulting Master Price Agreement.

Additional Information

National Purchasing Partners
International Place, North Tower
17930 International Boulevard
Suite 900
SeaTac, WA 98188

Marshall Stiles, Contracts Manager
marshall.stiles@mynpp.com
nppgov.com

Location:
401 Adams Avenue, Suite 280
Montgomery, AL 36104-4338

Mailing Address:
P.O. Box 302251
Montgomery, AL 36130-2251
Telephone (334) 242-9200
Fax (334) 242-1775
www.examiners.alabama.gov

Rachel Laurie Riddle
Chief Examiner

December 23, 2025

Alabama County Commissions
Alabama Municipalities
City and County Boards of Education

To Whom It May Concern,

In accordance with Sections 16-13B-2(a)(13) and 41-16-51(a)(16), *Ala. Code* 1975, as amended by Act No. 2023-135, the Department has reviewed the competitive bidding process used by NPPGov, a national, governmental purchasing cooperative, for the contracts awarded as of the date of this letter. The Department did not identify any matters that were contrary to proper purchasing procedures or routine governmental procurement practices. Each contract was awarded by various governmental entities pursuant to the competitive bid laws in the state of the awarding authority.

Based on the Department's review, the competitive bid process used by NPPGov is approved for use through **December 31, 2026**. This approval authorizes the purchase, lease, or lease/purchase of certain goods or services, other than voice or data wireless communication services, when certain statutory conditions are fulfilled. See Sections 16-13B-2(a)(13) and 41-16-51(a)(16), *Ala. Code* 1975, as amended by Act No. 2023-135.

Prior to utilizing NPPGov, each governmental entity must verify that the goods or services to be purchased, leased, or lease/purchased are either not at the time available on the state purchasing program or are available at a price equal to or less than that on the state purchase program. *Id.* Any such purchases, leases, or lease/purchases must be made through a participating Alabama vendor holding an Alabama business license if such a vendor exists. *Id.* Any such vendor shall also comply with Section 41-16-51(a)(16)d, *Ala. Code* 1975 when applicable. Further, all purchases must comply with the requirements of *Uniform Guidance*.

Should the Department receive notice that NPPGov, its awarding authorities, or its awarded vendors are allowing Alabama governmental entities to make unauthorized purchases or other unlawful business transactions, NPPGov's competitive bid process approval will subject to immediate revocation by the Department.

Attention Counties and Municipalities:

Please be advised, this letter authorizes the purchase of materials or equipment that are otherwise part of a contract for "public works," as defined in Section 39-2-1(6), *Ala. Code*

1975, as long as the remaining portion of the public works project is subject to the requirements of Title 39, even if the remaining portion of the project would involve an amount less than $100,000 as a result of the exclusion of the purchase of the materials or equipment. See Section 39-2-2(m)(1) and (2), *Ala. Code* 1975, as amended by Act 2023-497.

If the Department can be of further assistance, please let us know.

Sincerely,

Rachel Laurie Riddle
CHIEF EXAMINER

RLR/lbm



CAPITAL CONTRACT SUMMARY SHEET

AGENDA ITEM SUMMARY SHEET

Agenda of: July 7, 2026

Submitted by:
John Paine, Purchasing Agent

Sponsored by:
Spiro Cheriogotis, Mayor

Purpose and Scope of Project:
To approve issuance of purchase order to Dell Marketing LP for 50 Dell Pro Slim Plus desktop computers for MPD.

Amount of Contract:
$78,716.50

Funding Source
General fund.

ATTACHMENTS:
1. 20260623 Dell Agenda Package POs

REVIEWERS:
Lana Pafenbach
Lana Pafenbach

AGENDA ITEM SUMMARY SHEET

Print Page | Reset

Agenda of: 30 June 2026 (Date) Item No. _____

Submitted by: Procurement (Department) John Paine, Purchasing Agent (Department Head)

Sponsored by: Spiro N. Cheriogotis (Name) Mayor (Title)

Reviewed by: _____ (Executive Director)

Routing Authorized: James Barber (Mayor's Office) _____ (Date)

A brief synopsis and explanation of the following:

PROJECT NAME: Approval of Purchase Order to Dell Marketing LP

PURPOSE & SCOPE OF PROJECT:
To approve issuance of purchase order to Dell Marketing LP for 50 Dell Pro Slim Plus desktop computers for MPD.
General fund.

RESOLUTION ☒ ORDINANCE ☐ OTHER ☐

AMOUNT OF CONTRACT: $78,716.50

FUNDING SOURCE:

Budget Item: See Requisition Discretionary Funds: _____

Budget amendment: REDUCE ☐ INCREASED ☐

Grant funds: _____ Matching funds: _____

Associated Costs:

Current year (itemize)
Type: _____ Amount: _____

Future years
Year: _____ Amount: _____

**If Cost will continue, write "indefinite" and list project annual cost.*

Effective date of contract: On issuance to vendor.

Renewal date of contract (if applicable): _____

If not bid, state reason: Al state contract

How many bidders received bid packages (if applicable): na

How many bidders submitted bids (if applicable): na

If this is not the lowest bid, explain why not:

R E S O L U T I O N

Sponsored by: Mayor Spiro N. Cheriogotis

BE IT RESOLVED BY THE CITY COUNCIL OF MOBILE, ALABAMA, that the Purchasing Agent is authorized to execute, for and on behalf of the City of Mobile, a purchase order to the indicated vendor in the approximate amount stated, and to approve the supporting bid award if required, for the following requisition as indicated below and attached herein:

Requisition	Fiscal Year	Department	Description	Amount	Vendor
14227	2026	(1530) POLICE ADMIN SERVICES	50 DELL PRO SLIM PLUS DESKTOP COMPUTERS FOR MPD (AL STATE CONTRACT)	$78,716.50	(44120) DELL MARKETING LP

Adopted:

_____

City Clerk

Bill To	Requisition 00014227-00 FY 2026
ACCOUNTS PAYABLE	
P O BOX 389	Acct No:
	1000.30.15.1530.1530.1530.0000.0000.45050.
MOBILE, AL	Review:
36601	Buyer: 9105fola
vendorinvoices@cityofmobile.org	Status: Approved Page 1

Vendor	Ship To
DELL MARKETING LP	POLICE HEADQUARTERS
ONE DELL WAY	2460 GOVERNMENT STREET
RR8/2ND FLOOR-H168	
ATTN JEFF MURRAY	MOBILE, AL 36606
ROUND ROCK, TX 78682	
Tel#866	
Fax 6345653	
	Deliver To
	POLICE HEADQUARTERS
	2460 GOVERNMENT STREET
	MOBILE, AL 36606

Date Ordered	Vendor Number	Date Required	Ship Via	Terms	Department
06/22/26	044120				POLICE ADMIN SERVICES

LN	Description / Account	Qty	Unit Price	Net Price
	General Notes			
	PER STATE OF ALABAMA CONTRACT ##MA230000003898 AND YOUR QUOTE #3000203895966.3			
	CUSTOMER AGREEMENT #MA230000003898 CONTRACT#C000001041567			
001	DESKTOP COMPUTER, DELL PRO SLIM QBS1250 Intel(R) Core(TM) Ultra 7 265 (13 TOPS NPU, 20 cores, up to 5.3GHz) - 338-CRZM Windows 11 Pro - 619-BBQD 32GB: 2 x 16GB, DDR5, up to 5600 MT/s, non-ECC- 370-BCWR 1TB SSD TLC - 400-BSWR Screw for SSD - 773-BBBC Integrated Graphics - 490-BKSX No Wireless LAN Card - 555-BLXL Internal speaker - 520-BBKW No Additional Add In Cards - 382-BBHX Dell Pro Slim Plus QBS1250 with 260W PSU - 329-BKSP Dell Pro Keyboard and Mouse - KM5221W - US English - Black - 580-BCCH Mouse included with Keyboard - 570-AADI ENERGY STAR Qualified - 387-BBLW System Power Cord C13 (Philipine/TH/US) 450-AAOJ Documentation - 340-DNBV Watch Dog SRV - 379-BFYR Quick Start	50.00 EACH	1574.33000	78716.50

Bill To	Requisition 00014227-00 FY 2026
ACCOUNTS PAYABLE	
P O BOX 389	Acct No:
	1000.30.15.1530.1530.1530.0000.0000.45050.
MOBILE, AL	Review:
36601	Buyer: 9105fola
vendorinvoices@cityofmobile.org	Status: Approved Page 2

Vendor	Ship To
DELL MARKETING LP	POLICE HEADQUARTERS
ONE DELL WAY	2460 GOVERNMENT STREET
RR8/2ND FLOOR-H168	
ATTN JEFF MURRAY	MOBILE, AL 36606
ROUND ROCK, TX 78682	
Tel#866	
Fax 6345653	
	Deliver To
	POLICE HEADQUARTERS
	2460 GOVERNMENT STREET
	MOBILE, AL 36606

Date Ordered	Vendor Number	Date Required	Ship Via	Terms	Department
06/22/26	044120				POLICE ADMIN SERVICES

LN	Description / Account	Qty	Unit Price	Net Price
	Guide - 340-DTTZ US/Canada Battery Warning Label 389-FKHG Trusted Platform Module (Discrete TPM Enabled) - 329-BBJL Shipping Material (DAO)- 340-DTSR Shipping Label - 389-BBUU DAO Regulatory label for 260W PSU - 389-FJYR Driver/APP for IRST - 658-BFTS Intel(R) Core(TM) Ultra 7 vPro Processor Label - 389-FJVS Desktop BTO Standard shipment - 800-BBIO Dell Pro Slim Plus QBS1250 - 210-BPPM 8x DVD+/-RW/RAM 9.5mm Slimline Optical Disk Drive - 429-BBCG Intel vPro(R) Enterprise - 631-BCBN Cable Cover - 325-BGGZ EPEAT Silver with Climate+ - 379-BDTO No Additional Add In Cards - 382-BBHX No Additional Network Card Selected (Integrated NIC included) - 555-BBJO No Additional Video Ports - 492-BCKH No Media Card Reader - 379-BBHM NO RAID- 817-BBBN English, French, Spanish, Brazilian Portuguese - 619-BBPD CyberLink Media Essentials for Windows 430-XYIX Custom Configuration - 817-BBBB No Option Included - 340-ACQQ M.2 Caddy + ODD-			

Bill To	Requisition 00014227-00 FY 2026
ACCOUNTS PAYABLE P O BOX 389 MOBILE, AL 36601 vendorinvoices@cityofmobile.org	Acct No: 1000.30.15.1530.1530.1530.0000.0000.45050. Review: Buyer: 9105fola Status: Approved Page 3

Vendor	Ship To
DELL MARKETING LP ONE DELL WAY RR8/2ND FLOOR-H168 ATTN JEFF MURRAY ROUND ROCK, TX 78682 Tel#866 Fax 6345653	POLICE HEADQUARTERS 2460 GOVERNMENT STREET MOBILE, AL 36606
	Deliver To POLICE HEADQUARTERS 2460 GOVERNMENT STREET MOBILE, AL 36606

Date Ordered	Vendor Number	Date Required	Ship Via	Terms	Department
06/22/26	044120				POLICE ADMIN SERVICES

LN	Description / Account	Qty	Unit Price	Net Price
1	325-BGHH Dell Limited Hardware Warranty Plus Service- 717-8784 ProSupport: 7x24 Technical Support, 3 Years - 717-8797 ProSupport: Next Business Day Onsite, 3 Years - 717-8802 Thank you choosing Dell ProSupport. For tech support, visit //support.dell. com/ProSupport 989-3449 Activate Your Microsoft 365 For A 30 Day Trial - 630-ABBT Dell Pro Slim Plus QBS1250 - 658-BFVK 1000.30.15.1530.1530.1530.0000.0000.45050.			78716.50

Ship To
POLICE HEADQUARTERS
2460 GOVERNMENT STREET
MOBILE, AL 36606

Deliver To
POLICE HEADQUARTERS
2460 GOVERNMENT STREET
MOBILE, AL 36606

Requisition Link

Requisition Total 78716.50

***** General Ledger Summary Section *****

Account	Amount	Remaining Budget
1000.30.15.1530.1530.1530.0000.0000.45050.		

Bill To	Requisition 00014227-00 FY 2026
ACCOUNTS PAYABLE P O BOX 389 MOBILE, AL 36601 vendorinvoices@cityofmobile.org	Acct No: 1000.30.15.1530.1530.1530.0000.0000.45050. Review: Buyer: 9105fola Status: Approved Page 4

Vendor	Ship To
DELL MARKETING LP ONE DELL WAY RR8/2ND FLOOR-H168 ATTN JEFF MURRAY ROUND ROCK, TX 78682 Tel#866 Fax 6345653	POLICE HEADQUARTERS 2460 GOVERNMENT STREET MOBILE, AL 36606
	Deliver To POLICE HEADQUARTERS 2460 GOVERNMENT STREET MOBILE, AL 36606

Date Ordered	Vendor Number	Date Required	Ship Via	Terms	Department
06/22/26	044120				POLICE ADMIN SERVICES

Account	Amount	Remaining Budget
POLICE ADMIN SERVICES EXP REPAIR PARTS	78716.50	1189733.52

***** Approval/Conversion Info *****

Activity	Date	Clerk	Comment
Approved	06/24/26	DONALD ROSE	Auto approved by: 9105fola
Approved	06/24/26	SANDRA LEWIS	Auto approved by: 9105fola
Approved	06/24/26	STEVEN KRONINGER	Auto approved by: 9105fola
Approved	06/24/26	MARYLYN BUSCHELL	Auto approved by: 9105fola
Approved	06/24/26	JAMES NEESE	Auto approved by: 9105fola
Approved	06/24/26	PATRICIA KENNEDY-JONES	Auto approved by: 9105fola
Approved	06/24/26	REBECCA CRUMPLER	Auto approved by: 9105fola
Approved	06/24/26	ANNE FOLEY	
Approved	06/24/26	JOHN PAINE	Auto approved by: 9105fola

Authorized By: _____ Date: _____
Signature

Contract Header

Contract
Dell Inc. Products and Services (PCs and accessories)

Type
Master Agreement

Supplier
DELL MARKETING L P

Contract Code
MA230000003898

Linked Solicitation
Dell, Inc. Products and Services

Sourcing Number
SRC0000013822

Public Comments
Provides Dell OEM business-class computing products, including desktops, laptops, workstations, tablets, monitors, compatible accessories, and related maintenance services; printers, servers, storage, networking equipment, and cloud-based products are excluded

Contact Information

Contract Responsible

First name	Last name	Email	Phone
Brittany	Peterson	brittany.peterson@procurement.alabama.gov	334-242-4667

1 Record(s)

Supplier Contact

First name	Last name	Email	Phone
Carlynn	Panone	Carlynn.Panone@Dell.com	
James	Eddings	James.Eddings@dell.com	205-650-0816

2 Record(s)

Contract Scope

Organizations
State of Alabama

Contract Validity

Start Date
3/15/2023

End Date
3/14/2027

Documents

- MA additional terms and conditions.pdf
- RFB Standard Boilerplate udated 11.21.2022.pdf
- Dell PC Terms and Conditions.pdf

Items

Item Name	Product Code		UOM
Technical Services - Discount: 4%	TechSvs	0.00	Each
Dell, Inc OEM Monitors - Discount: 25%	Monitors	0.00	Each
Manufacturer Compatible Accessories - Discount: 10%	Accessories	0.00	Each
Dell, Inc. OEM Personal Computers - Discount: 35%	PCs/Laptops	0.00	Each

R E S O L U T I O N

Sponsored by: *Councilmember C. J. Small, District 3*

BE IT RESOLVED BY THE CITY COUNCIL OF THE CITY OF MOBILE, ALABAMA, that the sum of $**993.82** be transferred from the District 3 General Fund, Discretionary Account DSC-03, from General Fund Account 10041020-42080 to **Account #40678625** and will be used **to pay for a District 3 Oakdale Community Clean-Up and Unity Day mailout.**

Adopted:

_____
City Clerk

R E S O L U T I O N

Sponsored by: Councilmember Samantha Ingram, District 2

BE IT RESOLVED BY THE CITY COUNCIL OF MOBILE, ALABAMA, that the following application to the Alabama Alcoholic Beverage Control Board of the State of Alabama, is hereby recommended for grant of such license by said Board.

Type of application:	Retail Beer/Table Wine (Off Premises Only) License
Submitted by:	Lois Grocery and Market, LLC
Location:	Lois Grocery and Market 564 Plum Street Mobile, AL 36603

Adopted:

_____

City Clerk

COUNCIL MEMBERS
C.J. SMALL
PRESIDENT - DISTRICT 3
GINA GREGORY
VICE PRESIDENT - DISTRICT 7
CORY PENN
DISTRICT 1
SAMANTHA INGRAM
DISTRICT 2
BEN REYNOLDS
DISTRICT 4
BEAU FLEMING
DISTRICT 5
JOSH WOODS
DISTRICT 6

CITY CLERK
LISA C. LAMBERT

OFFICE OF THE CITY COUNCIL

Application Date	Application Type	Application Number	License Account #	Council District	Council Agenda Date
06/23/2026	TRANSFER - OWNERSHIP	2026 - 5801	133851	2	July 7, 2026

NOTE: If this letter is altered, or changed in any way, it will not be accepted by the Alabama Alcoholic Beverage Control Board

Alabama Alcoholic Beverage Control Board
PO Box 1151 Montgomery AL 36101

Gentleman,

The City Council of the City of Mobile does hereby consent to the applicant referenced below, which is located within the City's corporate limits, to the issuance of:

License Type(s)

050 - RETAIL BEER (OFF PREMISES ONLY)

070 - RETAIL TABLE WINE (OFF PREMISES ONLY)

Legal Business Name

LOIS GROCERY AND MARKET LLC

Trade Name (DBA)

LOIS GROCERY AND MARKET

Location Address

564 PLUM ST

City, State, Zip Code

MOBILE AL 36603

Comments

Yours Very Truly,

Mobile City Council President

Applicant/POA Signature _____ Date _____

OFFICE OF THE CITY COUNCIL

COUNCIL MEMBERS
C.J. SMALL
PRESIDENT - DISTRICT 3
GINA GREGORY
VICE PRESIDENT - DISTRICT 7
CORY PENN
DISTRICT 1
SAMANTHA INGRAM
DISTRICT 2
BEN REYNOLDS
DISTRICT 4
BEAU FLEMING
DISTRICT 5
JOSH WOODS
DISTRICT 6

CITY CLERK
LISA C. LAMBERT

Application Date	Application Type	Application Number	License Account #	Council District	Council Agenda Date
06/23/2026	TRANSFER - OWNERSHIP	2026 - 5801	133851	2	July 7, 2026

NOTE: If this letter is altered, or changed in any way, it will not be accepted by the Alabama Alcoholic Beverage Control Board

Alabama Alcoholic Beverage Control Board
PO Box 1151 Montgomery AL 36101

Gentleman,

The City Council of the City of Mobile does hereby consent to the applicant referenced below, which is located within the City's corporate limits, to the issuance of:

License Type(s)

050 - RETAIL BEER (OFF PREMISES ONLY)

070 - RETAIL TABLE WINE (OFF PREMISES ONLY)

Legal Business Name

LOIS GROCERY AND MARKET LLC

Trade Name (DBA)

LOIS GROCERY AND MARKET

Location Address

564 PLUM ST

City, State, Zip Code

MOBILE AL 36603

Comments

Yours Very Truly,

Mobile City Council President

Applicant/POA Signature

Date

City of Mobile ABC Licensing & Compliance Application

Application Date	Application Type	Application Number	License Account #	Council District	Council Agenda Date
06/23/2026	TRANSFER - OWNERSHIP	2026 - 5801	133851	2	July 7, 2026

License Type Applied for with Alabama ABC Board	2nd License Type Applied for with Alabama ABC Board
050 - RETAIL BEER (OFF PREMISES ONLY)	070 - RETAIL TABLE WINE (OFF PREMISES ONLY)

Business Information

Legal Business Name	Trade Name (DBA)
LOIS GROCERY AND MARKET LLC	LOIS GROCERY AND MARKET

Business Structure Type	Incorporation Date	SOS Entity ID	State	County
LLC - LIMITED LIABILITY COMPANY	12/21/2023	001-112-900	AL	MOBILE

Federal Tax ID (FEIN)	Alabama State Sales Tax ID	Business Phone Number	If Hemp, Product Type
99-0638841	R012752268		

Physical Address (Street Address, Suite #)	City	State	Zip Code
564 PLUM ST	MOBILE	AL	36603

Mailing Address (Street Address, Suite #, PO Box)	City	State	Zip Code
[redacted]			

Primary Business Activity at the Location Explain (other)	If Location Transfer, Previous Street Address and Zip Code
CONVENIENCE STORE	N/A

Contact Person Information

Name	Title	POA	Phone	Email
FELECIA THOMPSON	OWNER			

If Transfer of ABC License, Previous Licensee Information

Legal Business Name	Trade Name (DBA)
TOMMIE G THOMPSON	LOIS GROCERY

ABC License Type	License Number	Any ABC Pending Actions
050/070 - RETAIL BEER/WINE (OFF PREMISES ONLY)	008846	NO

Land/Building Information

Do you (the applicant) own or lease the property? RENT/LEASE - SIGNED and NOTARIZED LEASE ATTACHED

Property Owner Name and/or Contact Person Name	Property Owner Phone Number	Property Owner Email
TOMMIE G THOMPSON		N/A

Property Owner Mailing Address (Street Address, Suite #, PO Box)	City	State	Zip Code

Bldg Square Footage	Bldg Seating Capacity	Restroom Facilities	Patio Area	Structure Type	License Covers
6,000	0	YES	NO	ONE STORY	

Do the premises have a fully equipped/operational kitchen?	YES
Is the business used to habitually and principally provide food to the public?	NO
Is the business equipped with services and facilities for on premises consumption?	NO
Will the business be operated primarily as a package store?	NO

City of Mobile ABC Licensing & Compliance Application

Owner(s), Partner(s) or Officer(s) Information — **Copy of Driver's License Must Be Provided for each Person**

Full Name (Last, First, Middle)	Title	Driver's License (State, Number)	
THOMPSON FELICIA	OWNER		
Home Address (Street Address, Apt/Unit #)	**City**	**State**	**Zip Code**
Date of Birth / **Place of Birth (City, State, Nation)**	**Social Security Number**	**Mobile/Phone Number**	

Have you been charged (whether convicted or not) with any law violation(s) in the last ten (10) years?

NO

If Yes, Law Violation	Arresting Agency	Arrest Date	Disposition

Do you have any existing State of Alabama ABC license(s) with any entity in your name?

NO

If Yes, Legal Business Name	Business DBA	Physical Location Address (Street, City, Zip Code)

Full Name (Last, First, Middle)	Title	Driver's License (State, Number)	
Home Address (Street Address, Apt/Unit #)	**City**	**State**	**Zip Code**
Date of Birth / **Place of Birth (City, State, Nation)**	**Social Security Number**	**Mobile/Phone Number**	

Have you been charged (whether convicted or not) with any law violation(s) in the last ten (10) years?

If Yes, Law Violation	Arresting Agency	Arrest Date	Disposition

If Yes, Legal Business Name	Business DBA	Physical Location Address (Street, City, Zip Code)

Power of Attorney (POA) Information — **Copy of Driver's License Must Be Provided for each Person**

Full Name (Last, First, Middle)	Title	Date of Birth	Driver's License (State, Number)	
N/A				
Home Address (Street Address, Apt/Unit #)	**City**	**State**	**Zip Code**	**Phone Number**

Has anyone, including manager or applicant, had a City of Mobile, Federal/State license suspended, revoked or declined? NO

Has a liquor, wine, malt or brewed beverage license for these premises ever been denied, suspended, surrendered or revoked? NO

Are the applicants named in this application, the only person(s), in any manner, interested in the business sought to be licensed? YES

City of Mobile ABC Licensing & Compliance Application

CERTIFICATION and SIGNATURE

FT The undersigned agree, if a license is used as herein applied for, to comply at all times with and to fully observe all the provisions of the Alabama Alcoholic Beverage Control Act, as appears in the Code of Alabama, Title 28, and all laws of the State of Alabama and the Codes/Ordinances of the City of Mobile relative to the handling of alcoholic beverages.

FT The undersigned agree, if a license is used as herein requested, further agrees to obey all rules and regulations promulgated by the Board and the Code/Ordinances of the City of Mobile relative to all alcoholic beverages received in this State. The undersigned, if issued a license as herein requested, also agrees to allow and hereby invites duly authorized agents of the Alabama Alcoholic Beverage Control Board and any duly commissioned law enforcement officers of the State, County or Municipality in which the licensed premises are located to enter and search with a warrant the licensed premises or any building owned or occupied by him/her in connection with, adjoining, or adjacent thereto, whether connected or not, and whether used by him/her as his/her private dwelling.

FT The undersigned understands that should he or she violate any of the provisions of the Code of Alabama, Title 28, or any of the rules and regulations of the Alcoholic Beverage Control Board, his/her license shall be subject to revocation.

FT The undersigned understands that the City of Mobile reserves the right to file for suspension, revocation or an objection with the Alabama Alcoholic Beverage Control Board to a license renewal for failure to follow the Alcoholic Beverage Control Laws of the State of Alabama and the Codes/Ordinances of the City of Mobile or the creation of a nuisance. The undersigned further understands and agrees that no changes in the manner of operation, nature of owner and no deletion or discontinuance of any services or facilities as described in this application will be allowed with prior written approval of the City of Mobile and the Alabama Alcoholic Beverage Control Board.

FT Applicant for the Alcoholic Beverage license, requested by the forgoing applicant hereby swears or affirms that he/she has read said application and all the statements and facts set forth therein or in supporting documents are true and correct, and that, except as otherwise indicated therein, the applicant is the only person interested in the business for which license is requested.

FT In reference to ACT No. 80-529, I understand that if my application is denied or discontinued, I will not be refunded the filing fee required by this application.

FT Applicant understands that approval from the State of Alabama Alcoholic Beverage Control Board and the City of Mobile is owner and location specific. If the owner(s) named in the application and/or approval change and/or business is relocated to another location from what was applied for, then they must contact the Alabama Alcoholic Beverage Control Board and the City of Mobile for a new approval.

Owner/Applicant/POA Printed Name	Date of Application Signature
Felicia Thompson	7/1/26
Owner/Applicant/POA Signature	**Title of Person Signing this Application**
Felicia Thompson	7/1/26

Sworn to and subscribed before me this 30th day of June 20 26

Notary Person Printed Name	Notary Person Signature	My Notary Commission Expires
Tara Lynn Harris		February 11, 2030

City of Mobile Alcoholic Beverage License Application
Notice of Public Hearing

Section 30-79 is hereby added to of the Mobile City Code, 1991, as follows:

Section 30-79 - Notice of Public Hearing for Alcoholic Beverage License

a) In every case where application is made for any type of alcohol beverage license, in addition to other adverting requirements that may be required by law, notice of said application shall be published on a website approved for such notice by the City's Department of Revenue. Such notice shall read substantially as follows:

LOIS GROCERY AND MARKET LLC

dba LOIS GROCERY AND MARKET

has made application to the City Council of the City of Mobile for a

050 - RETAIL BEER (OFF PREMISES ONLY) and 070 - RETAIL TABLE WINE (OFF PREMISES ONLY)

for the premises located at

564 PLUM ST , Mobile, Alabama.

A public hearing will be held by the City Council in the Council's chambers at the Government Plaza Auditorium located at 205 Government Street at 1030am on July 7, 2026 for application number 2026 - 5801

b) In addition to the published notice required, the applicant shall post on the premises where the business or sale is to be conducted, continuously for a period of not less than SEVEN (7) days prior to the consideration of the application by the City Council, a posted notice of the pending application and public hearing concerning the granting thereof in the manner and form to be supplied by the City of Mobile Revenue Department, at the time applicant is first made to the City for such license. Such notice shall be conspicuously displayed on the front of the building so as to be clearly visible from the street or sidewalk adjacent thereto. The published notice shall be published for THREE (3) consecutive days.

c) Applicant shall take such steps as may be necessary to meet all requirements of ordinances, regulations, and statutes applicable thereto. When the application for a license is made and all requirements have been met, a day for the hearing shall be set, the day shall be supplied to the applicant to be inserted in the newspaper ad and in the posted notice.

Applicant/POA Signature

Tara Lynn Harris

Revenue Department Representative

City of Mobile ABC Licensing & Compliance Application

TO: City of Mobile City Council

FROM: City of Mobile Revenue Department

RE: Alcoholic Beverage License Request

Application Date	Application Type	Application Number	License Account #	Council District	Council Agenda Date
06/23/2026	TRANSFER - OWNERSHIP	2026 - 5801	133851	2	July 7, 2026

The applicant referenced below has filed an application and provided the required documentation with the City of Mobile Revenue Department for an alcoholic beverage and/or consumable hemp product(s) license and is applying to the City of Mobile requesting City Council approval for a state ABC license for sales of alcoholic beverages within the city limits at the physical location address below.

License Type(s)

050 - RETAIL BEER (OFF PREMISES ONLY)

070 - RETAIL TABLE WINE (OFF PREMISES ONLY)

Legal Business Name

LOIS GROCERY AND MARKET LLC

Trade Name (DBA)

LOIS GROCERY AND MARKET

Location Address

564 PLUM ST

City, State, Zip Code

MOBILE AL 36603

Contact Person Information

Name	Title	POA	Phone	Email
FELECIA THOMPSON	OWNER			

Has any outstanding license and tax issues been addressed and corrected with this business? YES

What is/was the start date of this business? 06/02/2026

The alcohol license will not be issued until two (2) letters of approval, signed by City Council, and a copy of the resolution passed by the City Council are received by the City of Mobile Revenue Department.

Tara Lynn Harris

Revenue Department Representative

PUBLIC NOTICE!

MOBILE
ALABAMA

An application has been submitted to the Mobile City Council for an ABC Compliance License. This license would authorize the sale of alcoholic beverages and/or consumable hemp products at the location listed below.

License Type(s)

050 - RETAIL BEER (OFF PREMISES ONLY)

070 - RETAIL TABLE WINE (OFF PREMISES ONLY)

Legal Business Name

LOIS GROCERY AND MARKET LLC

Trade Name (DBA)

LOIS GROCERY AND MARKET

Location Address

564 PLUM ST

Zip Code

36603

Application Number

2026 - 5801

Notice Post Date @ Location

06/23/2026

That public hearing on said application has been set before the City Council in the Government Plaza Auditorium (1st floor) located at 205 Government Street @ 1030am on Tuesday

July 7, 2026

Date

Anyone desiring to be heard either for or against said application may appear in person at said time or may indicate his or her wishes in writing by communication to the City of Mobile City Clerk Office

Applicant/POA Signature

Tara Lynn Harris

Revenue Department Representative

In accordance to the City of Mobile codes/ordinances, the applicant shall post on the premises where the business is to be conducted, continuously for a period of not less than seven (7) days prior to the consideration of the application by the governing body. Said notice shall be conspicuously displayed on the front of the building so as to be clearly visible from the street or sidewalk adjacent thereto.

STATE OF ALABAMA
ALCOHOLIC BEVERAGE CONTROL BOARD
ALCOHOL LICENSE APPLICATION
Confirmation Number: 20260602101939865

Type License: 050 - RETAIL BEER (OFF PREMISES ONLY)
070 - RETAIL TABLE WINE (OFF PREMISES ONLY)
990 - TOBACCO AND ALTERNATIVE NICOTINE PRODUCTS

State: **County:**

Trade Name: LOIS GROCERY AND MARKET

Filing Fee:

Applicant: LOIS GROCERY AND MARKET LLC

Transfer Fee: $150.00

Location Address: 564 PLUM ST MOBILE, AL 36603

Mailing Address

County: MOBILE **Tobacco sales:** YES **Tobacco Vending Machines:**

Product Type: 03 **Type Ownership:** LLC

Book, Page, or Document info: 001-112-900

Do you sell Draft Beer?: N/A

Date Incorporated: 12/21/2023 **State incorporated:** AL **County Incorporated:** MOBILE

Date of Authority:

Federal Tax ID: 99-0638841 **Alabama State Sales Tax ID:** R012752268

Name:	Title:	Date and Place of Birth:	Residence Address:
[redacted] THOMPSON	OWNER		

Has applicant complied with financial responsibility ABC RR 20-X-5-.14? YES

Does ABC have any actions pending against the current licensee? NO

Has anyone, including manager or applicant, had a Federal/State permit or license suspended or revoked? NO

Has a liquor, wine, malt or brewed license for these premises ever been denied, suspended, or revoked? NO

Are the applicant(s) named above, the only person(s), in any manner interested in the business sought to be licensed? YES

TP1T

STATE OF ALABAMA
ALCOHOLIC BEVERAGE CONTROL BOARD
ALCOHOL LICENSE APPLICATION
Confirmation Number: 20260602101939865

If applicant is leasing the property, is a copy of the lease agreement attached? YES

Name of Property owner/lessor and phone number: TOMMIE G THOMPSON 251-402-1096

What is lessors primary business? RETIRED

Is lessor involved in any way with the alcoholic beverage business? NO

Is there any further interest, or connection with, the licensee's business by the lessor? NO

Does the premise have a fully equipped kitchen? YES

Is the business used to habitually and principally provide food to the public? NO

Does the establishment have restroom facilities? YES

Is the premise equipped with services and facilities for on premises consumption of alcoholic beverages? NO

Will the business be operated primarily as a package store? NO

Building Dimensions Square Footage: 6000

Display Square Footage:

Building seating capacity: 0

Does Licensed premises include a patio area? NO

License Structure: ONE STORY

License covers: OTHER

Number of licenses in the vicinity:

Nearest:

Nearest school:

Nearest church:

Nearest residence:

Location is within: CITY/TOWN LIMITS

Police protection: CITY

STATE OF ALABAMA
ALCOHOLIC BEVERAGE CONTROL BOARD
ALCOHOL LICENSE APPLICATION
Confirmation Number: 20260602101939865

Has any person(s) with any interest, including manager, whether as sole applicant, officer, member, or partner been charged (whether convicted or not) of any law violation(s)?

Name:	Violation & Date:	Arresting Agency:	Disposition:

STATE OF ALABAMA
ALCOHOLIC BEVERAGE CONTROL BOARD
ALCOHOL LICENSE APPLICATION
Confirmation Number: 20260602101939865

Initial each — **Signature page**

Initial each	
FT	In reference to law violations, I attest to the truthfulness of the responses given within the application.
FT	In reference to the Lease/property ownership, I attest to the truthfulness of the responses given within the application.
FT	In reference to ACT No. 80-529, I understand that if my application is denied or discontinued, I will not be refunded the filing fee required by this application.
N/A	In reference to Special Retail or Special Events retail license, Wine Festival and Wine Festival Participant Licenses, and Food or Beverage Truck Licenses, I agree to comply with all applicable laws and regulations concerning this class of license, and to observe the special terms and conditions as indicated within the application.
N/A	In reference to the Club Application information, I attest to the truthfulness of the responses given within the application.
FT	In reference to the transfer of license/location, I attest to the truthfulness of the information listed on the attached transfer agreement.
FT	In accordance with Alabama Rules & Regulations 20-X-5-.01(4), any social security number disclosed under this regulation shall be used for the purpose of investigation or verification by the ABC Board and shall not be a matter of public record.
FT	The undersigned agree, if a license is issued as herein applied for, to comply at all times with and to fully observe all the provisions of the Alabama Alcoholic Beverage Control Act, as appears in Code of Alabama, Title 28, and all laws of the State of Alabama relative to the handling of alcoholic beverages. The undersigned, if issued a license as herein requested, further agrees to obey all rules and regulations promulgated by the board relative to all alcoholic beverages received in this State. The undersigned, if issued a license as herein requested, also agrees to allow and hereby invites duly authorized agents of the Alabama Alcoholic Beverage Control Board and any duly commissioned law enforcement officer of the State, County or Municipality in which the license premises are located to enter and search without a warrant the licensed premises or any building owned or occupied by him or her in connection with said licensed premises. The undersigned hereby understands that he or she violate any provisions of the aforementioned laws his or her license shall be subject to revocation and no license can be again issued to said licensee for a period of one year. The undersigned further understands and agrees that no changes in the manner of operation and no deletion or discontinuance of any services or facilities as described in this application will be allowed without written approval of the proper governing body and the Alabama Alcoholic Beverage Control Board.
FT	I hereby swear and affirm that I have read the application and all statements therein and facts set forth are true and correct, and that the applicant is the only person interested in the business for which the license is required.

Applicant Name (print): Felicia Thompson

Signature of Applicant: Felicia Thompson

Notary Name (print): April D. Jones

Notary Signature: April D. Jones

APRIL D. JONES NOTARY PUBLIC STATE OF ALABAMA

Commission expires: 3/13/2030

Application Taken: **App. Inv. Completed:** **Forwarded to District Office:**
Submitted to Local Government: **Received from Local Government:**
Received in District Office: **Reviewed by Supervisor:** **Forwarded to Central Office:**

STATE OF ALABAMA
ALCOHOLIC BEVERAGE CONTROL BOARD
ALCOHOL LICENSE APPLICATION
Confirmation Number: 20260602101939865

Private Clubs / Special Retail / or Special Events licenses ONLY

Private Club
Does the club charge and collect dues from elected members? N/A
Number of paid up members:
Are meetings regularly held? N/A
How often?
Is business conducted through officers regularly elected? N/A
Are members admitted by written application, investigation, and ballot? N/A
Has Agent verified membership applications for each member listed? N/A
Has at least 10% of members listed been confirmed and highlighted? N/A Agent's Initials:
For what purpose is the club organized?
Does the property used, as well as the advantages, belong to all the members? N/A
Do the operations of the club benefit any individual member(s), officer(s), director(s), agent(s), or employee(s) of the club rather than to benefit of the entire membership? N/A

Special Retail
Is it for 30 days or less? N/A
More than 30 days? N/A

Franchisee or Concessionaire of above? N/A
Other valid responsible organization: N/A
Explanation:

Special Events / Special Retail (7 days or less)
Starting Date: Ending Date:
Special terms and conditions for special event/special retail:

Other Explanations
License Covers: 564

STATE OF ALABAMA
ALCOHOLIC BEVERAGE CONTROL BOARD
ALCOHOL LICENSE APPLICATION
Confirmation Number: 20260602101939865

Are any of the applicants, whether individual, member of a partnership or association, or officers and directors of a corporation itself, in any manner monetarily interested, either directly or indirectly, in the profits of any other class of business regulated under authority of this act? NO

Does applicant own or control, directly or indirectly, hold lien against any real or personal property which is rented, leased or used in the conduct of business by the holder of any vinous, malt or brewed beverage, or distilled liquors permit or license issued under authority of this act? NO

Is applicant receiving, either directly or indirectly, any loan, credit, money, or the equivalent thereof from or through a subsidiary or affiliate or other licensee, or from any firm, association or corporation operating under or regulated by the authority of this act? NO

Contact Person: FELICIA THOMPSON
Business Phone:
Fax:

PREVIOUS LICENSE INFORMATION:
Trade Name: LOIS GROCERY
Applicant: TOMMIE G THOMPSON

Previous Vendor Number: 008846

STATE OF ALABAMA
ALCOHOLIC BEVERAGE CONTROL BOARD
Confirmation Number: 20260602101939865

NOTICE OF TRANSFER OF ABC LICENSED BUSINESS

NOTE: A Copy of Operating Agreement Must be Attached To Application

CURRENT LICENSEE:
TOMMIE G THOMPSON
Address: 564 PLUM ST
MOBILE, AL 36617
Telephone

NEW APPLICANT:
LOIS GROCERY AND MARKET LLC
Address
Telephor

Current License No: 008846

LICENSED PREMISES ADDRESS: 564 PLUM ST MOBILE, AL 36603

THE AFORENAMED HEREBY SERVE NOTICE TO THE ABC BOARD OF THE ATTACHED CONTRACTUAL AGREEMENT GOVERNING THE CONTINUATION OF SALES OF ALCOHOLIC BEVERAGES ON THE LICENSED PREMISES.

The Parties to this agreement hereby acknowledge and affirm that the New (Applicant) Licensee will, at all times, act as the AGENT for the Current (Named) Licensee, and the Current Licensee shall act as PRINCIPAL for the purposes of the attached Agreement. The Principal shall be bound by all acts and/or omissions of the Agent in the operation of the licensed premises.

The Current Licensee is now and shall remain liable for any violations of ABC Rules and Regulations or other Alabama Law for the duration of the attached Agreement; and, further, that the Current Licensee has the right and authority, under Alabama Law, to surrender the ABC License to the ABC Board at any time.

The parties acknowledge that the operation of the licensed premises shall remain subject to inspection by ABC Enforcement, and must comply with all State and Local regulations and Laws, and that the local ABC Enforcement District Office must be immediately notified of any change in the attached Agreement.

THE CURRENT LICENSE WILL NOT BE RENEWED.

WITNESS our hands and seals on this the 2nd day of June, 2026.

CURRENT LICENSEE (NAMED ON LICENSE)

Tommie G. Thompson
Print Name: Tommie G. Thompson
Title: Owner

NEW LICENSEE (APPLICANT)

Felicia Thompson
Print Name: Felicia Thompson
Title: Owner

WITNESS: (By ABC Enforcement) [signature]
Revised 9/08

[signature]
STATE OF ALABAMA NOTARY PUBLIC
DEIDRA JOHNSON
My Commission Expires
May 6, 2028

STATE OF ALABAMA
ALCOHOLIC BEVERAGE CONTROL BOARD
Confirmation Number: 20260602101939865

NOTICE OF TRANSFER OF ABC LICENSED BUSINESS

NOTE: A Copy of Operating Agreement Must be Attached To Application

CURRENT LICENSEE:
TOMMIE G THOMPSON
Address: 564 PLUM ST
MOBILE, AL 36617
Telephon[illegible]

NEW APPLICANT:
LOIS GROCERY AND MARKET LLC
Address[illegible]
Telephone:[illegible]

Current License No: 008846

LICENSED PREMISES ADDRESS: 564 PLUM ST | MOBILE, AL 36603

THE AFORENAMED HEREBY SERVE NOTICE TO THE ABC BOARD OF THE ATTACHED CONTRACTUAL AGREEMENT GOVERNING THE CONTINUATION OF SALES OF ALCOHOLIC BEVERAGES ON THE LICENSED PREMISES.

The Parties to this agreement hereby acknowledge and affirm that the New (Applicant) Licensee will, at all times, act as the AGENT for the Current (Named) Licensee, and the Current Licensee shall act as PRINCIPAL for the purposes of the attached Agreement. The Principal shall be bound by all acts and/or omissions of the Agent in the operation of the licensed premises.

The Current Licensee is now and shall remain liable for any violations of ABC Rules and Regulations or other Alabama Law for the duration of the attached Agreement; and, further, that the Current Licensee has the right and authority, under Alabama Law, to surrender the ABC License to the ABC Board at any time.

The parties acknowledge that the operation of the licensed premises shall remain subject to inspection by ABC Enforcement, and must comply with all State and Local regulations and Laws, and that the local ABC Enforcement District Office must be immediately notified of any change in the attached Agreement.

THE CURRENT LICENSE WILL NOT BE RENEWED.

WITNESS our hands and seals on this the 9 day of June, 20 26.

CURRENT LICENSEE (NAMED ON LICENSE)

Tommie G. Thompson

Print Name: Tommie G. Thompson
Title:

NEW LICENSEE (APPLICANT)

Felicia Thomps

Print Name: Felicia Thompson
Title: Owner

WITNESS: (By ABC Enforcement) _____
Revised 9/08

DEIDRA JOHNSON
My Commission Expires
May 6, 2028

Receipt Confirmation Page

Receipt Confirmation Number: 20260602101939885
Application Payment Confirmation Number: 118574458

Payment Summary	
Payment Item	Fee
Transfer Fee for License 050, 070 and 990	$150.00
Total Amount to be Charged	$150.00

Application Type

Application Type: TRANSFER

Applicant Information

License Type 1: 050 - RETAIL BEER (OFF PREMISES ONLY)
License Type 2: 070 - RETAIL TABLE WINE (OFF PREMISES ONLY)
License Type 3: 990 - TOBACCO AND ALTERNATIVE NICOTINE PRODUCTS
License Type 4:
License Type 5:
License Type 6:
License Type 7:
License Type 8:
License Type 9:
License Type 10:
License County: MOBILE
Business Type: LLC
Trade Name: LOIS GROCERY AND MARKET
Applicant Name: LOIS GROCERY AND MARKET LLC
Location Address: 564 PLUM ST
MOBILE, AL 36603

Mailing Address

[redacted]

Wes Allen
Secretary of State

P.O. Box 5616
Montgomery, AL 36103-5616

STATE OF ALABAMA

I, Wes Allen, Secretary of State of Alabama, having custody of the Great and Principal Seal of said State, do hereby certify that

pursuant to the provisions of Title 10A, Chapter 1, Article 5, Code of Alabama 1975, and upon an examination of the entity records on file in this office, the following entity name is reserved as available:

Lois Grocery and Market LLC

This name reservation is for the exclusive use of Felecia T Thompson, 2055 Costarides St, mobile, AL 36617 for a period of one year beginning December 21, 2023 and expiring December 21, 2024

In Testimony Whereof, I have hereunto set my hand and affixed the Great Seal of the State, at the Capitol, in the city of Montgomery, on this day.

December 21, 2023

Date

Wes Allen **Secretary of State**

RES130313

STATE OF ALABAMA

DOMESTIC LIMITED LIABILITY COMPANY (LLC)
CERTIFICATE OF FORMATION

PURPOSE: In order to form a Limited Liability Company (LLC) under Section 10A-5A-2.01 of the *Code of Alabama 1975*, this Certificate of Formation and the appropriate filing fees must be filed with the Office of the Secretary of State. **The information required in this form is required by Title 10A.**

1. The name of the limited liability company (must contain the words "Limited Liability Company" or the abbreviation "L.L.C." or "LLC," and comply with *Code of Alabama*, Section 10A-1-5.06. You may use Professional or Series before Limited Liability Company or LLC (or PLLC or SLLC) if they apply:

   Lois Grocery and Market LLC

2. **A copy of the Name Reservation Certificate from the Office of the Secretary of State must be attached.**

3. The name of the registered agent (only one agent): FELECIA T THOMPSON

   Street (**no PO Boxes**) address of registered office (must be located in Alabama):

   2055 Costarides St Mobile, AL 36617

   *COUNTY of above address: MOBILE

   Mailing address in Alabama of registered office (if different from street address):

4. The undersigned certify that there is at least one member of the limited liability company.

(For SOS Office Use Only)

Alabama
Sec. Of State

001-112-900 DLL

Date	12/21/2023
Time	14:24:00
File	$100.00
County	$100.00
Total	$200.00

DOMESTIC LIMITED LIABILITY COMPANY (LLC) CERTIFICATE OF FORMATION

5. Check only if the type applies to the Limited Liability Company being formed:

   ○ Series LLC complying with Title 10A, Chapter 5A, Article 11

   ○ Professional LLC complying with Title 10A, Chapter 5A, Article 8

   ○ Non-Profit LLC complying with Section 10A-5A-1.04(c)

6. The filing of the limited liability company is effective immediately on the date received by the office of the Secretary of State, Business Services Division or at the delayed filing date (cannot be prior to the filing date) specified in this filing complying with Section 10A-1-4.12
   The undersigned specify 12 / 21 / 2023 as the effective date (must be on or after the date filed in the office of the Secretary of State, but no later than the 90th day after the date this instrument was signed) and the time of filing to be 2 : 16 ○ AM or ◉ PM. (cannot be noon or midnight – 12:00)

☐ Attached are any other matters the members determine to include herein (if this item is checked there must be attachments with the filing).

12 / 21 / 2023
Date (MM/DD/YYYY)

Felecia T Thompson
Signature as required by 10A-5A-2.04

Owner
Typed title (organizer or attorney-in-fact)

*County of Registered Agent is requested in order to determine distribution of County filing fees.

IRS DEPARTMENT OF THE TREASURY
INTERNAL REVENUE SERVICE
CINCINNATI OH 45999-0023

Date of this notice: 01-10-2024

Employer Identification Number:
99-0638841

Form: SS-4

Number of this notice: CP 575 G

LOIS GROCERY AND MARKET LLC
FELECIA TURNER THOMPSON SOLE MBR
2055 COSTARIDES ST
MOBILE, AL 36617

For assistance you may call us at:
1-800-829-4933

IF YOU WRITE, ATTACH THE
STUB AT THE END OF THIS NOTICE.

WE ASSIGNED YOU AN EMPLOYER IDENTIFICATION NUMBER

Thank you for applying for an Employer Identification Number (EIN). We assigned you EIN 99-0638841. This EIN will identify you, your business accounts, tax returns, and documents, even if you have no employees. Please keep this notice in your permanent records.

Taxpayers request an EIN for their business. Some taxpayers receive CP575 notices when another person has stolen their identity and are opening a business using their information. If you did **not** apply for this EIN, please contact us at the phone number or address listed on the top of this notice.

When filing tax documents, making payments, or replying to any related correspondence, it is very important that you use your EIN and complete name and address exactly as shown above. Any variation may cause a delay in processing, result in incorrect information in your account, or even cause you to be assigned more than one EIN. If the information is not correct as shown above, please make the correction using the attached tear-off stub and return it to us.

A limited liability company (LLC) may file Form 8832, *Entity Classification Election*, and elect to be classified as an association taxable as a corporation. If the LLC is eligible to be treated as a corporation that meets certain tests and it will be electing S corporation status, it must timely file Form 2553, *Election by a Small Business Corporation*. The LLC will be treated as a corporation as of the effective date of the S corporation election and does not need to file Form 8832.

To obtain tax forms and publications, including those referenced in this notice, visit our Web site at www.irs.gov. If you do not have access to the Internet, call 1-800-829-3676 (TTY/TDD 1-800-829-4059) or visit your local IRS office.

(IRS USE ONLY) 575G 01-10-2024 LOIS O 9999999999 SS-4

IMPORTANT REMINDERS:

* Keep a copy of this notice in your permanent records. This notice is issued only one time and the IRS will not be able to generate a duplicate copy for you. You may give a copy of this document to anyone asking for proof of your EIN.

* Use this EIN and your name exactly as they appear at the top of this notice on all your federal tax forms.

* Refer to this EIN on your tax-related correspondence and documents.

* Provide future officers of your organization with a copy of this notice.

Your name control associated with this EIN is LOIS. You will need to provide this information along with your EIN, if you file your returns electronically.

Safeguard your EIN by referring to Publication 4557, Safeguarding Taxpayer Data: A Guide for Your Business.

You can get any of the forms or publications mentioned in this letter by visiting our website at www.irs.gov/forms-pubs or by calling 800-TAX-FORM (800-829-3676).

If you have questions about your EIN, you can contact us at the phone number or address listed at the top of this notice. If you write, please tear off the stub at the bottom of this notice and include it with your letter.

Thank you for your cooperation.

Keep this part for your records. CP 575 G (Rev. 7-2007)

Return this part with any correspondence so we may identify your account. Please correct any errors in your name or address.

CP 575 G

9999999999

Your Telephone Number ( ) -

Best Time to Call

DATE OF THIS NOTICE: 01-10-2024
EMPLOYER IDENTIFICATION NUMBER: 99-0638841
FORM: SS-4 NOBOD

INTERNAL REVENUE SERVICE
CINCINNATI OH 45999-0023

2026

SALES TAX LICENSE

State of Alabama

Alabama Department of Revenue

ISSUED TO:

LOIS GROCERY & MARKET LLC

ACCOUNT TYPE	ACCOUNT NUMBER	EFFECTIVE DATE	EXPIRATION DATE
SLS	R012752268	01/1/2026	12/31/2026

TO ENGAGE IN BUSINESS FOR WHICH TAX IS IMPOSED BY SECTIONS 40-23-1/40 CODE OF ALABAMA 1975, AS AMENDED. SALES TAX LAW

NON-TRANSFERABLE

THIS ACCOUNT ISSUED TO PERSON OR BUSINESS WHOSE NAME APPEARS ABOVE IS NOT TRANSFERABLE. THE LICENSEE MAY PURCHASE ITEMS TAX EXEMPT FOR THE PURPOSE OF RESALE AT RETAIL IN THE REGULAR COURSE OF BUSINESS.

STATE OF ALABAMA
DEPARTMENT OF REVENUE

Jennifer Byrd

Deputy Commissioner

NAICS CODE: 445110

THIS LICENSE APPLIES TO THE FOLLOWING LOCATION(S):

564 PLUM ST MOBILE AL 36603-5760

COMMERCIAL LEASE AGREEMENT

THE PARTIES. This Lease Agreement agreed on December 31 2025 is between:

The **Lessor** is 1 individual(s) known as Tommie Thompson with a mailing address of 2051 Costarides St, Mobile, Alabama, 36617, hereinafter referred to as the "Lessor."

AND

The **Lessee** is 1 individual(s) known as Lois Grocery And Market LLC with a mailing address of the Property's Address, hereinafter referred to as the "Lessee."

The Lessor and Lessee hereby agree as follows:

DESCRIPTION OF LEASED PREMISES. The Lessor agrees to lease to the Lessee the following described retail space located at 564 Plum St, Mobile, Alabama, 36603.

Hereinafter referred to as the "Premises".

USE OF LEASED PREMISES. The Lessor is leasing the Premises to the Lessee and the Lessee is hereby agreeing to lease the Premises for any legal use allowed in accordance with local, State, and Federal laws.

Any change in use or purpose of the Premises other than as described above shall be upon prior written consent of Lessor only otherwise the Lessee will be considered in default of this Lease Agreement.

EXCLUSIVE USE. The Lessee shall not hold exclusive rights on the Premises. The Lessor shall hold the rights to lease other areas of the Property to any same or like use as the Lessee.

TERM OF LEASE. This Lease shall commence on December 31, 2025 and expire at Midnight on December 31 2027 ("Initial Term").

RENT AMOUNT. Payment shall be made by the Lessee to the Lessor in the amount of $1.00 per month for the Initial Term of this Lease Agreement hereinafter referred to as the "Rent."

RENT PAYMENT. The Rent shall be paid under the following instructions:

Rent shall be paid by the Lessee to the Lessor's aforementioned mailing address.

RETURNED CHECKS (NSF). If the Lessee attempts to pay Rent with a check that is not deemed valid by a financial institution due to non-sufficient funds, or any other reason for it to be returned, the Lessee will be subject to a fee of $0.00 in addition to any late fee.

LATE FEE. The Lessor shall not charge a late payment fee if the rent is not paid on time by the Lessee.

EXPENSES. In accordance with a Triple Net (NNN) Lease the responsibility of the expenses shall be attributed to the following:

It is the intention of the Parties, and they hereby agree, that in addition to the Rent, the Lessee shall be obligated to pay the following expenses to the Lessor on a per year basis:

OPERATING EXPENSES. The Lessor shall have no obligation to provide any services, perform any acts or pay any expenses, charges, obligations or costs of any kind whatsoever with respect to the Premises, and Lessee hereby agrees to pay one-hundred percent (100%) of any and all Operating Expenses as hereafter defined for the entire term of the Lease and any renewals thereof in accordance with specific provisions hereinafter set forth. The term "Operating Expenses" shall include all costs to Lessor of operating and maintaining the Premises, and shall include, without limitation, real estate, and personal property taxes and assessments, management fee(s), heating, air conditioning, HVAC, electricity, water, waste disposal, sewage, operating materials and supplies, service agreements and charges, lawn care, snow removal, restriping, repairs, repaving, cleaning and custodial, security, insurance, the cost of contesting the validity or applicability of any governmental acts which may affect operating expenses, and all other direct operating costs of operating and maintaining the Premises and related parking areas, unless expressly excluded from operating expenses.

TAXES. Lessee shall pay, during the term of this Lease, the real estate taxes and special taxes and assessments (collectively, the "taxes") attributable to the Premises and accruing during such term. The Lessee shall pay to Lessor said taxes on a monthly basis, based on one-twelfth (1/12) of the estimated annual amount for taxes. Taxes for any fractional calendar year during the term hereof shall be prorated. In the event Lessee does not make any tax payment required hereunder, Lessee shall be in default of this Lease.

INSURANCE. The Lessee shall provide and maintain personal liability and property damage insurance. The Lessee and will designate the Lessor as an "also named insured". The Lessee shall provide the Lessor with a copy of such insurance certification or policy prior to the effective date of this Lease Agreement. The insurance shall protect and indemnify the Lessor of any injury, death, or property damage to occur on the property to the limits of $1,000,000.00.

UTILITIES. The Lessee shall be responsible for any and all utilities to the Premises in relation to the total property area.

SECURITY DEPOSIT. A security deposit shall not be required in advance upon the signing of this Lease.

FURNISHINGS. The Lessor will not provide any furnishings to the Lessee under this Lease.

PARKING. There shall not be any parking provided to the Lessee.

RIGHT OF FIRST REFUSAL. Lessor grants to Lessee throughout the Initial Term, along with any renewal periods, a right of first refusal to purchase the Premises pursuant to any offer received and accepted by the Lessor. Lessor must notify Lessee in writing and offer to purchase all or part of the Premises with Lessee having 7 calendar days after receipt of the notice to exercise its right of first refusal and notify Lessor of its decision whether or not to purchase the Premises under the same or similar terms under the offer accepted by the Lessor.

If financing is needed by the Lessee, the Lessee will be allowed the time-frame as stated in the offer accepted that was accepted by the Lessor. If the offer accepted by the Lessor is not contingent on financing then the Lessee shall be granted a maximum of 30 days to secure financing for the purchase of the Premises.

LEASEHOLD IMPROVEMENTS. The Lessee agrees that no leasehold improvements, alterations or changes of any nature, (except for those listed on any attached addenda) shall be made to the leasehold Premises or the exterior of the building without first obtaining the consent of the Lessor in writing, which consent shall not be unreasonably withheld, and thereafter, any and all leasehold improvements made to the Premises which become affixed or attached to the leasehold Premises shall remain the property of the Lessor at the expiration or termination of this Lease Agreement. Furthermore, any leasehold improvements shall be made only in accordance with applicable federal, state or local codes, ordinances or regulations, having due regard for the type of construction of the building housing the subject leasehold Premises. If the Lessee makes any improvements to the Premises the Lessee shall be responsible for payment.

Nothing in the Lease shall be construed to authorize the Lessee or any other person acting for the Lessee to encumber the rents of the Premises or the interest of the Lessee in the Premises or any person under and through whom the Lessee has acquired its interest in the Premises with a mechanic's lien or any other type of encumbrance. Under no circumstance shall the Lessee be construed to be the agent, employee or representative of Lessor. In the event a lien is placed against the Premises, through actions of the Lessee, Lessee will promptly pay the same or bond against the same and take steps immediately to have such lien removed. If the Lessee fails to have the Lien removed, the Lessor shall take steps to remove the lien and the Lessee shall pay Lessor for all expenses related to the Lien and removal thereof and shall be in default of this Lease.

LICENSES AND PERMITS. A copy of any and all local, state or federal permits acquired by the Lessee which are required for the use of the Premises shall be kept on-site at all times and shall be readily accessible and produced to the Lessor and/or their agents or any local, state, or federal officials upon demand.

MAINTENANCE. The Lessee shall be responsible for all repairs and maintenance on the Premises due to normal wear and tear on the Premises. Particularly items which need immediate attention including but not limited to, the replacement of light bulbs, normal repair and cleaning of windows, cleaning of bathrooms, clearing of toilets, etc. The Lessee shall properly maintain the premises in a good, safe and clean condition and shall properly and promptly remove all rubbish and hazardous wastes and see that the same are properly disposed of according to all local, state or federal laws, rules regulations or ordinances.

In the event the Premises is damaged as a result of any neglect or negligence of Lessee, his employees, agents, business invitees, or any independent contractors serving the Lessee or in any way as a result of Lessee's use and occupancy of the premises, then the Lessee shall be primarily responsible for seeing that the proper claims are placed with the Lessee's insurance company, or the damaging party's insurance company, and shall furthermore be responsible for seeing that the building is safeguarded with respect to said damage and that all proper notices with respect to said damage, are made in a timely fashion, including notice to the Lessor, and the party or parties causing said damage.

SALE OF PROPERTY. In the event of a sale of the Premises the Lessor shall have the right to terminate this Lease Agreement by submitting written notice to the Lessee. Notice shall be submitted at least 180 days.

INSURANCE. In the event Lessee shall fail to obtain insurance required hereunder and fails to maintain the same in force continuously during the term, Lessor may, but shall not be required to, obtain the same and charge the Lessee for same as additional rent. Furthermore, Lessee agrees not to keep upon the premises any articles or goods which may be prohibited by the standard form of fire insurance policy, and in the event the insurance rates applicable to fire and extended coverage covering the premises shall be increased by reason of any use of the premises made by Lessee, then Lessee shall pay to Lessor, upon demand, such increase in insurance premium as shall be caused by said use or Lessee's proportionate share of any such increase.

SUBLET/ASSIGNMENT. The Lessee may not transfer or assign this Lease, or any right or interest hereunder or sublet said leased premises or any part thereof.

DAMAGE TO LEASED PREMISES. In the event the building housing the leased premises shall be destroyed or damaged as a result of any fire or other casualty which is not the result of the intentional acts or neglect of Lessee and which precludes or adversely affects the Lessee's occupancy of the leased premises, then in every such cause, the rent herein set forth shall be abated or adjusted according to the extent to which the Premises have been rendered unfit for use and occupation by the Lessee and until the demised premises have been put in a condition at the expense of the Lessor, at least to the extent of the value and as nearly as possible to the condition of the premises existing immediately prior to such damage. It is understood, however, in the event of total or substantial destruction to the Premises that in no event shall the Lessor's obligation to restore, replace or rebuild exceed an amount equal to the sum of the insurance proceeds available for reconstruction with respect to said damage.

The Lessee shall, during the term of this Lease, and in the renewal thereof, at its sole expense, keep the interior of the leased premises in as good a condition and repair as it is at the date of this Lease, reasonable wear and use excepted. This obligation would include the obligation to replace any plate glass damaged as a result of the neglect or acts of Lessee or her guests or invitees. Furthermore, the Lessee shall not knowingly commit nor permit to be committed any act or thing contrary to the rules and regulations prescribed from time to time by any federal, state or local authorities and shall expressly not be allowed to keep or maintain any hazardous waste materials or contaminates on the premises. Lessee shall also be responsible for the cost, if any, which would be incurred to bring her contemplated operation and business activity into compliance with any law or regulation of a federal, state or local authority.

HAZARDOUS MATERIALS LAWS. Shall mean any and all federal, state, or local laws, ordinances, rules, decrees, orders, regulations, or court decisions relating to hazardous substances, hazardous materials, hazardous waste, toxic substances, environmental conditions on, under, or about the Premises, the Building, or the Property, or soil and ground water conditions, including, but not limited to, the Comprehensive Environmental Response, Compensation and Liability Act of 1980 (CERCLA), the Resource Conservation and Recovery Act (RCRA), the Hazardous Materials Transportation Act, any other law or legal requirement concerning hazardous or toxic substances, and any amendments to the foregoing.

LESSEE'S DEFAULT AND POSSESSION. In the event that the Lessee shall fail to pay said rent and expenses as set forth herein, or any part thereof, when the same are due and payable, or shall otherwise be in default of any other terms of said Lease for a period of more than 1 days, after receiving notice of said default, then the parties hereto expressly agree and covenant that the Lessor may declare the Lease terminated and may immediately re-enter said premises and take possession of the same together with any of Lessee's personal property, equipment or fixtures left on the premises which items may be held by the Lessor as security for the Lessee's eventual payment and/or satisfaction of rental defaults or other defaults of Lessee under the Lease. It is further agreed, that if the Lessee is in default, that the Lessor shall be entitled to take any and all action to protect its interest in the personal property and equipment, to prevent the unauthorized removal of said property or equipment which threatened action would be deemed to constitute irreparable harm and injury to the Lessor in violation of its security interest in said items of personal property. Furthermore, in the event of default, the Lessor may expressly undertake all reasonable preparations and efforts to release the Premises including, but not limited to, the removal of all inventory, equipment or leasehold improvements of the Lessee's, at the Lessee's expense, without the need to first procure an order of any court to do so, although obligated in the interim to undertake reasonable steps and procedures to safeguard the value of Lessee's property, including the storage of the same, under reasonable terms and conditions at Lessee's expense, and, in addition, it is understood that the Lessor may sue the Lessee for any damages or past rents due and owing and may undertake all and additional legal remedies then available.

LESSOR'S DEFAULT. The Lessee may send written notice to the Lessor stating duties or obligations that have not been fulfilled under the full performance of this Lease Agreement. If said duties or obligations have not been cured within 30 days from receiving such notice, unless the Lessor needs to more time to cure or remedy such issue in accordance with standard industry protocol, then the Lessor shall be in default of this Lease Agreement.

If the Lessor should be in default the Lessee shall have the option to terminate this Lease Agreement and be held harmless against any of its terms or obligations.

DISPUTES. If any dispute should arise in relation to this Lease Agreement the Lessor and Lessee shall first negotiate amongst themselves in "good faith." Afterwards, if the dispute is not resolved then the Lessor and Lessee shall seek mediation in accordance with the laws in the State of Alabama. If the

Lessor and Lessee fail to resolve the dispute through mediation then the American Arbitration Association shall be used in accordance with their rules. Lessor and Lessee agree to the binding effect of any ruling or judgment made by the American Arbitration Association.

INDEMNIFICATION. The Lessee hereby covenants and agrees to indemnify, defend and hold the Lessor harmless from any and all claims or liabilities which may arise from any cause whatsoever as a result of Lessee's use and occupancy of the premises, and further shall indemnify the Lessor for any losses which the Lessor may suffer in connection with the Lessee's use and occupancy or care, custody and control of the premises. The Lessee also hereby covenants and agrees to indemnify and hold harmless the Lessor from any and all claims or liabilities which may arise from any latent defects in the subject premises that the Lessor is not aware of at the signing of the lease or at any time during the lease term.

BANKRUPTCY - INSOLVENCY. The Lessee agrees that in the event all or a substantial portion of the Lessee's assets are placed in the hands of a receiver or a Trustee, and such status continues for a period of 30 days, or should the Lessee make an assignment for the benefit of creditors or be adjudicated bankrupt, or should the Lessee institute any proceedings under the bankruptcy act or any amendment thereto, then such Lease or interest in and to the leased premises shall not become an asset in any such proceedings and, in such event, and in addition to any and all other remedies of the Lessor hereunder or by law provided, it shall be lawful for the Lessor to declare the term hereof ended and to re-enter the leased land and take possession thereof and all improvements thereon and to remove all persons therefrom and the Lessee shall have no further claim thereon.

SUBORDINATION AND ATTORNMENT. Upon request of the Lessor, Lessee will subordinate its rights hereunder to the lien of any mortgage now or hereafter in force against the property or any portion thereof, and to all advances made or hereafter to be made upon the security thereof, and to any ground or underlying lease of the property provided, however, that in such case the holder of such mortgage, or the Lessor under such Lease shall agree that this Lease shall not be divested or in any way affected by foreclosure, or other default proceedings under said mortgage, obligation secured thereby, or Lease, so long as the Lessee shall not be in default under the terms of this Lease. Lessee agrees that this Lease shall remain in full force and effect notwithstanding any such default proceedings under said mortgage or obligation secured thereby.

Lessee shall, in the event of the sale or assignment of Lessor's interest in the building of which the Premises form a part, or in the event of any proceedings brought for the foreclosure of, or in the event of exercise of the power of sale under any mortgage made by Lessor covering the Premises, attorn to the purchaser and recognize such purchaser as Lessor under this Lease.

USAGE BY LESSEE. Lessee shall comply with all rules, regulations and laws of any governmental authority with respect to use and occupancy. Lessee shall not conduct or permit to be conducted upon the premises any business or permit any act which is contrary to or in violation of any law, rules or

regulations and requirements that may be imposed by any authority or any insurance company with which the premises is insured, nor will the Lessee allow the premises to be used in any way which will invalidate or be in conflict with any insurance policies applicable to the building. In no event shall explosives or extra hazardous materials be taken onto or retained on the premises. Furthermore, Lessee shall not install or use any equipment that will cause undue interference with the peaceable and quiet enjoyment of the premises by other Lessees of the building.

SIGNAGE. Lessee shall not place on any exterior door, wall or window of the premises any sign or advertising matter without Lessor's prior written consent and the approval of the local municipality. Thereafter, Lessee agrees to maintain such sign or advertising matter as first approved by Lessor in good condition and repair. Furthermore, Lessee shall conform to any uniform reasonable sign plan or policy that the Lessor may introduce with respect to the building. Upon vacating the premises, Lessee agrees to remove all signs and to repair all damages caused or resulting from such removal.

PETS. No pets shall be allowed on the premises without the prior written permission of Lessor unless said pet is required for reasons of disability under the Americans with Disability Act.

CONDITION OF PREMISES/INSPECTION BY LESSEE. The Lessee acknowledges they have had the opportunity to inspect the Premises and acknowledges with its signature on this Lease that the Premises are in good condition and comply in all respects with the requirements of this Lease. The Lessor makes no representation or warranty with respect to the condition of the premises or its fitness or availability for any particular use, and the Lessor shall not be liable for any latent or patent defect therein. The Lessee represents that Lessee has inspected the premises and is leasing and will take possession of the premises with all current fixtures present in their "as is" condition as of the date hereof.

AMERICANS WITH DISABILITY ACT. Per 42 U.S. Code § 12183 if the Lessee is using the Premises as a public accommodation (e.g. restaurants, shopping centers, office buildings) or there are more than 15 employees the Premises must provide accommodations and access to persons with disabilities that is equal or similar to that available to the general public. Owners, operators, lessors, and lessees of commercial properties are all responsible for ADA compliance. If the Premises is not in compliance with the Americans with Disability Act any modifications or construction will be the responsibility of the Lessee.

RIGHT OF ENTRY. It is agreed and understood that the Lessor and its agents shall have the complete and unencumbered right of entry to the Premises at any time or times for purposes of inspecting or showing the Premises and for the purpose of making any necessary repairs to the building or equipment as may be required of the Lessor under the terms of this Lease or as may be deemed necessary with respect to the inspection, maintenance or repair of the building. In accordance with State and local

laws, the Lessor shall have the right to enter the Premises without the consent of the Lessee in the event of an emergency.

ESTOPPEL CERTIFICATE. Lessee at any time and from time to time, upon at least ten (10) days prior notice by Lessor, shall execute, acknowledge and deliver to Lessor, and/or to any other person, firm or corporation specified by Lessor, a statement certifying that the Lease is unmodified and in full force and effect, or if the Lease has been modified, then that the same is in full force and effect except as modified and stating the modifications, stating the dates to which the fixed rent and additional rent have been paid, and stating whether or not there exists any default by Lessor under this Lease and, if so, specifying each such default.

HOLDOVER PERIOD. Should the Lessee remain in possession of the Premises after the cancellation, expiration or sooner termination of the Lease, or any renewal thereof, without the execution of a new Lease or addendum, such holding over in the absence of a written agreement to the contrary shall be deemed to have created and be construed to be a tenancy from month to month with the Rent to be due and payable in the same amount as the previous month, terminable upon 30 days' notice by either party.

WAIVER. Waiver by Lessor of a default under this Lease shall not constitute a waiver of a subsequent default of any nature.

GOVERNING LAW. This Lease shall be governed by the laws of the State of Alabama.

NOTICES. Notices shall be addressed to the following:

Lessor: Tommie Thompson

2051 Costarides St, Mobile, Alabama, 36617

564 Plum St, Mobile, Alabama, 36603

AMENDMENT(S). No amendment of this Lease shall be effective unless reduced to writing and subscribed by the parties with all the formality of the original.

SEVERABILITY. If any term or provision of this Lease Agreement is illegal, invalid or unenforceable, such term shall be limited to the extent necessary to make it legal and enforceable, and, if necessary, severed from this Lease. All other terms and provisions of this Lease Agreement shall remain in full force and effect.

BINDING EFFECT. This Lease and any amendments thereto shall be binding upon the Lessor and the Lessees and/or their respective successors, heirs, assigns, executors and administrators.

LESSOR SIGNATURE

Signature Tommie Thompson Date 12/31/2025

Tommie Thompson

LESSEE SIGNATURE

Signature Julica Henry Date 12/31/2025

Lois Grocery And Market LLC

CITY of MOBILE ALCOHOLIC BEVERAGE LICENSE APPLICATION

PLANNING & ZONING DEPARTMENT APPROVAL

Request for zoning permission to process an alcoholic beverage application, subject to approval by the City of Mobile City Council and issuance of the Zoning Approval Certificate

Business Structure	Application Type	Transfer - License?	Description/Type
☐ Sole Proprietorship ☑ Limited Liability Company (LLC) ☐ Corporation	☐ New Business ☑ New Owner ☐ Location Change	☐ No ☑ Yes Relocation Date:	☑ Convenience/Grocery Store ☐ Hotel ☐ Lounge/Bar ☐ Package Store ☐ Restaurant ☐ Other

License Type Applied for with AL ABC Board (*MUST* match with ABC Board) - check ALL that apply

☐ 010 - Lounge Retail Liquor (Class I) ☐ 011 - Lounge Retail Liquor (Class II) - Package Store ☐ 020 - Restaurant Retail Liquor
☐ 040 - Retail Beer (On/Off Premises) ☑ 050 - Retail Beer (Off Premises Only) ☐ 060 Retail Table Wine (On/Off Premises)
☑ 070 - Retail Wine (Off Premises Only) ☐ 090 - Wholesale - Beer ☐ 100 - Wholesale - Wine ☐ 110 - Wholesale - Beer & Wine
☐ 140 - Special Events Retail ☐ 160 - Special Events - More than 30 Days ☐ 200 Manufacturer ☐ 220 BrewPub

Legal Business Name	Trade Name (DBA)
LOIS GROCERY AND MARKET LLC	LOIS GROCERY AND MARKET

Company Physical Address (Street Address, Suite #)	City	State	Zip Code
564 PLUM ST	MOBILE	AL	36603

Business Contact Person Information

Name	Title	Phone	Email
FELICIA THOMPSON	OWNER/MGR		

URBAN DEVELOPMENT DEPARTMENT USE ONLY

Building Sq Footage	Parking Provided	Parking Required	Compliance	Zoning	Approved
1,250	8	4	Yes	R-2	Yes

Comments

Approved per Use Variance (Variance #: 4064 or Case #: BOA1986-004064).

Print Name	Signature	Date
Tiffany Green	Tiffany Green	06/26/2026

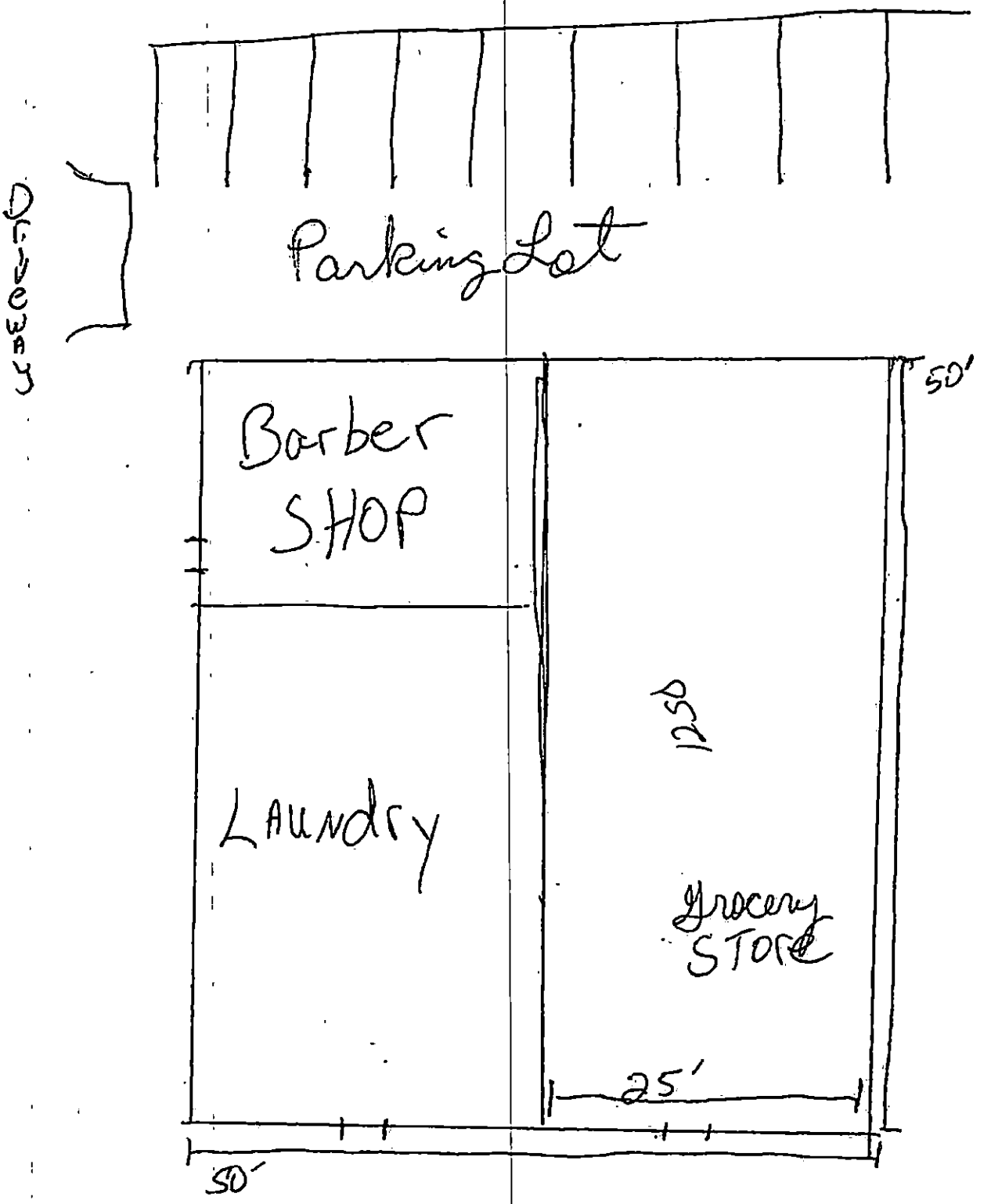

Lot Size: 100' x 110'
Corner Lot

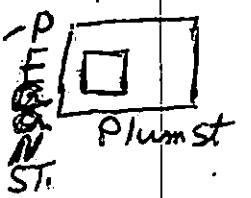

CITY OF MOBILE

REVENUE DEPARTMENT

June 30, 2026

LOIS GROCERY AND MARKET

564 PLUM STREET

MOBILE, AL 36603 USA

ACCOUNT NUMBER: 133851 TERRITORY 2

INVOICE

BILL #	MTH/YR	DESCRIPTION	AMOUNT BILLED	PENALTY DUE	INTEREST DUE	AMOUNT PAID
2344232	12/2026	ALCOHOL APPLICATION FEE (LIQUOR & CONSUMABLE HEMP) APPLICATION FEE	$50.00	$0.0	$0.00	$0.00

TOTAL AMOUNT DUE WITHIN 10 DAYS OF INVOICE DATE:

$50.00*

***Additional penalties may apply when payment is rendered**

To avoid further collection efforts, or the assessment of additional interest and penalties, complete your payment online at:

https://cityofmobileal.tylerportico.com/css/citizen-selfservice-bl/business-license/home

or mail your payment to:

CITY OF MOBILE REVENUE DEPARTMENT

PO BOX 3065

MOBILE, AL 36652-3065

[redacted]

R E S O L U T I O N

Sponsored by: Councilmember Samantha Ingram, District 2

BE IT RESOLVED BY THE CITY COUNCIL OF MOBILE, ALABAMA, that the following application to the Alabama Alcoholic Beverage Control Board of the State of Alabama, is hereby recommended for grant of such license by said Board.

Type of application:	Retail Beer/Table Wine (Off Premises Only) License
Submitted by:	MBROS, LLC
Location:	The Peoples Room of Mobile 78 Saint Francis Street Mobile, AL 36602

Adopted:

_____

City Clerk

OFFICE OF THE CITY COUNCIL

COUNCIL MEMBERS
C.J. SMALL
PRESIDENT - DISTRICT 3
GINA GREGORY
VICE PRESIDENT - DISTRICT 7
CORY PENN
DISTRICT 1
SAMANTHA INGRAM
DISTRICT 2
BEN REYNOLDS
DISTRICT 4
BEAU FLEMING
DISTRICT 5
JOSH WOODS
DISTRICT 6

CITY CLERK
LISA C. LAMBERT

Application Date	Application Type	Application Number	License Account #	Council District	Council Agenda Date
06/25/2026	NEW APPLICATION	2026 - 5804	133977	2	July 7, 2026

NOTE: If this letter is altered, or changed in any way, it will not be accepted by the Alabama Alcoholic Beverage Control Board

Alabama Alcoholic Beverage Control Board
PO Box 1151 Montgomery AL 36101

Gentleman,

The City Council of the City of Mobile does hereby consent to the applicant referenced below, which is located within the City's corporate limits, to the issuance of:

License Type(s)

040 - RETAIL BEER (ON OR OFF PREMISES)

060 - RETAIL TABLE WINE (ON OR OFF PREMISES)

Legal Business Name

MBROS LLC

Trade Name (DBA)

THE PEOPLES ROOM OF MOBILE

Location Address

78 SAINT FRANCIS ST

City, State, Zip Code

MOBILE AL 36602

Comments

Yours Very Truly,

Mobile City Council President

Applicant/POA Signature

Date

OFFICE OF THE CITY COUNCIL

COUNCIL MEMBERS
C.J. SMALL
PRESIDENT - DISTRICT 3
GINA GREGORY
VICE PRESIDENT - DISTRICT 7
CORY PENN
DISTRICT 1
SAMANTHA INGRAM
DISTRICT 2
BEN REYNOLDS
DISTRICT 4
BEAU FLEMING
DISTRICT 5
JOSH WOODS
DISTRICT 6

CITY CLERK
LISA C. LAMBERT

Application Date	Application Type	Application Number	License Account #	Council District	Council Agenda Date
06/25/2026	NEW APPLICATION	2026 - 5804	133977	2	July 7, 2026

NOTE: If this letter is altered, or changed in any way, it will not be accepted by the Alabama Alcoholic Beverage Control Board

Alabama Alcoholic Beverage Control Board
PO Box 1151 Montgomery AL 36101

Gentleman,

The City Council of the City of Mobile does hereby consent to the applicant referenced below, which is located within the City's corporate limits, to the issuance of:

License Type(s)

040 - RETAIL BEER (ON OR OFF PREMISES)

060 - RETAIL TABLE WINE (ON OR OFF PREMISES)

Legal Business Name

MBROS LLC

Trade Name (DBA)

THE PEOPLES ROOM OF MOBILE

Location Address

78 SAINT FRANCIS ST

City, State, Zip Code

MOBILE AL 36602

Comments

Yours Very Truly,

Mobile City Council President

Applicant/POA Signature

Date

City of Mobile ABC Licensing & Compliance Application

Application Date	Application Type	Application Number	License Account #	Council District	Council Agenda Date
06/25/2026	NEW APPLICATION	2026 - 5804	133977	2	July 7, 2026

License Type Applied for with Alabama ABC Board	2nd License Type Applied for with Alabama ABC Board
040 - RETAIL BEER (ON OR OFF PREMISES)	060 - RETAIL TABLE WINE (ON OR OFF PREMISES)

Business Information

Legal Business Name	Trade Name (DBA)
MBROS LLC	THE PEOPLES ROOM OF MOBILE

Business Structure Type	Incorporation Date	SOS Entity ID	State	County
LLC - LIMITED LIABILITY COMPANY	03/19/2026	001-242-604	AL	MOBILE

Federal Tax ID (FEIN)	Alabama State Sales Tax ID	Business Phone Number	If Hemp, Product Type
41-4110396	R012788372		

Physical Address (Street Address, Suite #)	City	State	Zip Code
78 SAINT FRANCIS ST	MOBILE	AL	36602

Mailing Address (Street Address, Suite #, PO Box)	City	State	Zip Code
78 SAINT FRANCIS ST	MOBILE	AL	36602

Primary Business Activity at the Location Explain (other)	If Location Transfer, Previous Street Address and Zip Code
LOUNGE/BAR	N/A

Contact Person Information

Name	Title	POA	Phone	Email
JAY MEEKS	CO-OWNER			

If Transfer of ABC License, Previous Licensee Information

Legal Business Name	Trade Name (DBA)
N/A	

ABC License Type	License Number	Any ABC Pending Actions

Land/Building Information

Do you (the applicant) own or lease the property? RENT/LEASE - SIGNED and NOTARIZED LEASE ATTACHED

Property Owner Name and/or Contact Person Name	Property Owner Phone Number	Property Owner Email
FRANK RAUE		M

Property Owner Mailing Address (Street Address, Suite #, PO Box)	City	State	Zip Code
PO BOX 441	ESPARTO	CA	95627

Bldg Square Footage	Bldg Seating Capacity	Restroom Facilities	Patio Area	Structure Type	License Covers
1,000	48	YES	NO	SINGLE STRUCTURE	ENTIRE STRUCTURE

Do the premises have a fully equipped/operational kitchen?	NO
Is the business used to habitually and principally provide food to the public?	NO
Is the business equipped with services and facilities for on premises consumption?	YES
Will the business be operated primarily as a package store?	NO

City of Mobile ABC Licensing & Compliance Application

Owner(s), Partner(s) or Officer(s) Information — **Copy of Driver's License Must Be Provided for each Person**

Full Name (Last, First, Middle)	Title	Driver's License (State, Number)	
ROBERT MEEKS	CO-OWNER		
Home Address (Street Address, Apt/Unit #)	**City**	**State**	**Zip Code**
Date of Birth	**Place of Birth (City, State, Nation)**	**Social Security Number**	**Mobile/Phone Number**

Have you been charged (whether convicted or not) with any law violation(s) in the last ten (10) years?

	If Yes, Law Violation	Arresting Agency	Arrest Date	Disposition
NO				

Do you have any existing State of Alabama ABC license(s) with any entity in your name?

	If Yes, Legal Business Name	Business DBA	Physical Location Address (Street, City, Zip Code)
NO			

Full Name (Last, First, Middle)	Title	Driver's License (State, Number)	
JAY MEEKS	CO-OWNER		
Home Address (Street Address, Apt/Unit #)	**City**	**State**	**Zip Code**
Date of Birth	**Place of Birth (City, State, Nation)**	**Social Security Number**	**Mobile/Phone Number**

Have you been charged (whether convicted or not) with any law violation(s) in the last ten (10) years?

	If Yes, Law Violation	Arresting Agency	Arrest Date	Disposition
NO				

	If Yes, Legal Business Name	Business DBA	Physical Location Address (Street, City, Zip Code)
NO			

Power of Attorney (POA) Information — **Copy of Driver's License Must Be Provided for each Person**

Full Name (Last, First, Middle)	Title	Date of Birth	Driver's License (State, Number)	
N/A				
Home Address (Street Address, Apt/Unit #)	**City**	**State**	**Zip Code**	**Phone Number**

Has anyone, including manager or applicant, had a City of Mobile, Federal/State license suspended, revoked or declined? NO

Has a liquor, wine, malt or brewed beverage license for these premises ever been denied, suspended, surrendered or revoked? NO

Are the applicants named in this application, the only person(s), in any manner, interested in the business sought to be licensed? YES

City of Mobile ABC Licensing & Compliance Application

CERTIFICATION and SIGNATURE

The undersigned agree, if a license is used as herein applied for, to comply at all times with and to fully observe all the provisions of the Alabama Alcoholic Beverage Control Act, as appears in the Code of Alabama, Title 28, and all laws of the State of Alabama and the Codes/Ordinances of the City of Mobile relative to the handling of alcoholic beverages.

The undersigned agree, if a license is used as herein requested, further agrees to obey all rules and regulations promulgated by the Board and the Code/Ordinances of the City of Mobile relative to all alcoholic beverages received in this State. The undersigned, if issued a license as herein requested, also agrees to allow and hereby invites duly authorized agents of the Alabama Alcoholic Beverage Control Board and any duly commissioned law enforcement officers of the State, County or Municipality in which the licensed premises are located to enter and search with a warrant the licensed premises or any building owned or occupied by him/her in connection with, adjoining, or adjacent thereto, whether connected or not, and whether used by him/her as his/her private dwelling.

The undersigned understands that should he or she violate any of the provisions of the Code of Alabama, Title 28, or any of the rules and regulations of the Alcoholic Beverage Control Board, his/her license shall be subject to revocation.

The undersigned understands that the City of Mobile reserves the right to file for suspension, revocation or an objection with the Alabama Alcoholic Beverage Control Board to a license renewal for failure to follow the Alcoholic Beverage Control Laws of the State of Alabama and the Codes/Ordinances of the City of Mobile or the creation of a nuisance. The undersigned further understands and agrees that no changes in the manner of operation, nature of owner and no deletion or discontinuance of any services or facilities as described in this application will be allowed with prior written approval of the City of Mobile and the Alabama Alcoholic Beverage Control Board.

Applicant for the Alcoholic Beverage license, requested by the forgoing applicant hereby swears or affirms that he/she has read said application and all the statements and facts set forth therein or in supporting documents are true and correct, and that, except as otherwise indicated therein, the applicant is the only person interested in the business for which license is requested.

In reference to ACT No. 80-529, I understand that if my application is denied or discontinued, I will not be refunded the filing fee required by this application.

Applicant understands that approval from the State of Alabama Alcoholic Beverage Control Board and the City of Mobile is owner and location specific. If the owner(s) named in the application and/or approval change and/or business is relocated to another location from what was applied for, then they must contact the Alabama Alcoholic Beverage Control Board and the City of Mobile for a new approval.

Owner/Applicant/POA Printed Name	Date of Application Signature
Jay Meeks	7/1/26
Owner/Applicant/POA Signature	**Title of Person Signing this Application**
	Member 7/1/26

Sworn to and subscribed before me this 30th day of June 20 26

Notary Person Printed Name	Notary Person Signature	My Notary Commission Expires
Tara Lynn Harris		February 11, 2030

City of Mobile ABC Licensing & Compliance Application

TO: City of Mobile City Council

FROM: City of Mobile Revenue Department

RE: Alcoholic Beverage License Request

Application Date	Application Type	Application Number	License Account #	Council District	Council Agenda Date
06/25/2026	NEW APPLICATION	2026 - 5804	133977	2	July 7, 2026

The applicant referenced below has filed an application and provided the required documentation with the City of Mobile Revenue Department for an alcoholic beverage and/or consumable hemp product(s) license and is applying to the City of Mobile requesting City Council approval for a state ABC license for sales of alcoholic beverages within the city limits at the physical location address below.

License Type(s)

040 - RETAIL BEER (ON OR OFF PREMISES)

060 - RETAIL TABLE WINE (ON OR OFF PREMISES)

Legal Business Name

MBROS LLC

Trade Name (DBA)

THE PEOPLES ROOM OF MOBILE

Location Address

78 SAINT FRANCIS ST

City, State, Zip Code

MOBILE AL 36602

Contact Person Information				
Name	Title	POA	Phone	Email
JAY MEEKS	CO-OWNER			

Has any outstanding license and tax issues been addressed and corrected with this business? YES

What is/was the start date of this business? 07/10/2026

The alcohol license will not be issued until two (2) letters of approval, signed by City Council, and a copy of the resolution passed by the City Council are received by the City of Mobile Revenue Department.

Tara Lynn Harris

Revenue Department Representative

Letter to City Council

City of Mobile Alcoholic Beverage License Application
Notice of Public Hearing

Section 30-79 is hereby added to of the Mobile City Code, 1991, as follows:

Section 30-79 - Notice of Public Hearing for Alcoholic Beverage License

a) In every case where application is made for any type of alcohol beverage license, in addition to other adverting requirements that may be required by law, notice of said application shall be published on a website approved for such notice by the City's Department of Revenue. Such notice shall read substantially as follows:

MBROS LLC

dba THE PEOPLES ROOM OF MOBILE

has made application to the City Council of the City of Mobile for a

040 - RETAIL BEER (ON OR OFF PREMISES) and 060 - RETAIL TABLE WINE (ON OR OFF PREMISES)

for the premises located at

78 SAINT FRANCIS ST , Mobile, Alabama.

A public hearing will be held by the City Council in the Council's chambers at the Government Plaza Auditorium located at 205 Government Street at 1030am on July 7, 2026 for application number 2026 - 5804

b) In addition to the published notice required, the applicant shall post on the premises where the business or sale is to be conducted, continuously for a period of not less than SEVEN (7) days prior to the consideration of the application by the City Council, a posted notice of the pending application and public hearing concerning the granting thereof in the manner and form to be supplied by the City of Mobile Revenue Department, at the time applicant is first made to the City for such license. Such notice shall be conspicuously displayed on the front of the building so as to be clearly visible from the street or sidewalk adjacent thereto. The published notice shall be published for THREE (3) consecutive days.

c) Applicant shall take such steps as may be necessary to meet all requirements of ordinances, regulations, and statutes applicable thereto. When the application for a license is made and all requirements have been met, a day for the hearing shall be set, the day shall be supplied to the applicant to be inserted in the newspaper ad and in the posted notice.

Applicant/POA Signature

Tara Lynn Harris

Revenue Department Representative

PUBLIC NOTICE!

An application has been submitted to the Mobile City Council for an ABC Compliance License. This license would authorize the sale of alcoholic beverages and/or consumable hemp products at the location listed below.

License Type(s)

040 - RETAIL BEER (ON OR OFF PREMISES)

060 - RETAIL TABLE WINE (ON OR OFF PREMISES)

Legal Business Name

MBROS LLC

Trade Name (DBA)

THE PEOPLES ROOM OF MOBILE

Location Address

78 SAINT FRANCIS ST

Zip Code

36602

Application Number

2026 - 5804

Notice Post Date @ Location

06/25/2026

That public hearing on said application has been set before the City Council in the Government Plaza Auditorium (1st floor) located at 205 Government Street @ 1030am on Tuesday

July 7, 2026

Date

Anyone desiring to be heard either for or against said application may appear in person at said time or may indicate his or her wishes in writing by communication to the City of Mobile City Clerk Office

Applicant/POA Signature

Tara Lynn Harris

Revenue Department Representative

In accordance to the City of Mobile codes/ordinances, the applicant shall post on the premises where the business is to be conducted, continuously for a period of not less than seven (7) days prior to the consideration of the application by the governing body. Said notice shall be conspicuously displayed on the front of the building so as to be clearly visible from the street or sidewalk adjacent thereto.

STATE OF ALABAMA
ALCOHOLIC BEVERAGE CONTROL BOARD
ALCOHOL LICENSE APPLICATION
Confirmation Number: 20260519144700583

Type License: 040 - RETAIL BEER (ON OR OFF PREMISES)
060 - RETAIL TABLE WINE (ON OR OFF PREMISES)

State: **County:**

Trade Name: THE PEOPLES ROOM OF MOBILE

Filing Fee:

Applicant: MBROS LLC

Transfer Fee: $100.00

Location Address: 78 SAINT FRANCIS ST MOBILE, AL 36602

Mailing Address: 78 SAINT FRANCIS ST MOBILE, AL 36602

County: MOBILE **Tobacco sales:** NO **Tobacco Vending Machines:**

Product Type: **Type Ownership:** LLC

Book, Page, or Document info: 001-242-604

Do you sell Draft Beer?: N/A

Date Incorporated: 03/19/2026 **State incorporated:** AL **County Incorporated:** MOBILE

Date of Authority: 03/19/2026

Federal Tax ID: 41-4110396 **Alabama State Sales Tax ID:** R012788372

Name:	Title:	Date and Place of Birth:	Residence Address:
ROBERT MEEKS	MEMBER		
JAY JOHNATHAN MEEKS	MEMBER		

Has applicant complied with financial responsibility ABC RR 20-X-5-.14? YES

Does ABC have any actions pending against the current licensee? NO

Has anyone, including manager or applicant, had a Federal/State permit or license suspended or revoked? NO

Has a liquor, wine, malt or brewed license for these premises ever been denied, suspended, or revoked? NO

Are the applicant(s) named above, the only person(s), in any manner interested in the business sought to be licensed? YES

STATE OF ALABAMA
ALCOHOLIC BEVERAGE CONTROL BOARD
ALCOHOL LICENSE APPLICATION
Confirmation Number: 20260519144700583

Are any of the applicants, whether individual, member of a partnership or association, or officers and directors of a corporation itself, in any manner monetarily interested, either directly or indirectly, in the profits of any other class of business regulated under authority of this act? NO

Does applicant own or control, directly or indirectly, hold lien against any real or personal property which is rented, leased or used in the conduct of business by the holder of any vinous, malt or brewed beverage, or distilled liquors permit or license issued under authority of this act? NO

Is applicant receiving, either directly or indirectly, any loan, credit, money, or the equivalent thereof from or through a subsidiary or affiliate or other licensee, or from any firm, association or corporation operating under or regulated by the authority of this act? NO

Contact Person: JAY MEEKS
Business Phone
Fax:

Hc
Ce
E-

PREVIOUS LICENSE INFORMATION:
Trade Name: THE PEOPLES ROOM
Applicant: THE PEOPLES ROOM LLC

Previous Vendor Number: 105305

STATE OF ALABAMA
ALCOHOLIC BEVERAGE CONTROL BOARD
ALCOHOL LICENSE APPLICATION
Confirmation Number: 20260519144700583

If applicant is leasing the property, is a copy of the lease agreement attached? YES

Name of Property owner/lessor and phone number: FRANK RAUE 251-721-4398

What is lessors primary business? RETIRED

Is lessor involved in any way with the alcoholic beverage business? NO

Is there any further interest, or connection with, the licensee's business by the lessor? NO

Does the premise have a fully equipped kitchen? NO

Is the business used to habitually and principally provide food to the public? NO

Does the establishment have restroom facilities? YES

Is the premise equipped with services and facilities for on premises consumption of alcoholic beverages? YES

Will the business be operated primarily as a package store? NO

Building Dimensions Square Footage: 1000

Display Square Footage:

Building seating capacity: 48

Does Licensed premises include a patio area? NO

License Structure: SINGLE STRUCTURE

License covers: ENTIRE STRUCTURE

Number of licenses in the vicinity:

Nearest:

Nearest school:

Nearest church:

Nearest residence:

Location is within: CITY/TOWN LIMITS

Police protection: CITY

STATE OF ALABAMA
ALCOHOLIC BEVERAGE CONTROL BOARD
ALCOHOL LICENSE APPLICATION
Confirmation Number: 20260519144700583

Has any person(s) with any interest, including manager, whether as sole applicant, officer, member, or partner been charged (whether convicted or not) of any law violation(s)?

Name:	Violation & Date:	Arresting Agency:	Disposition:

STATE OF ALABAMA
ALCOHOLIC BEVERAGE CONTROL BOARD
ALCOHOL LICENSE APPLICATION
Confirmation Number: 20260519144700583

Initial each	Signature page
[ ]	In reference to law violations, I attest to the truthfulness of the responses given within the application.
[ ]	In reference to the Lease/property ownership, I attest to the truthfulness of the responses given within the application.
[ ]	In reference to ACT No. 80-529, I understand that if my application is denied or discontinued, I will not be refunded the filing fee required by this application.
[X]	In reference to Special Retail or Special Events retail license, Wine Festival and Wine Festival Participant Licenses, and Food or Beverage Truck Licenses, I agree to comply with all applicable laws and regulations concerning this class of license, and to observe the special terms and conditions as indicated within the application.
[X]	In reference to the Club Application information, I attest to the truthfulness of the responses given within the application.
[ ]	In reference to the transfer of license/location, I attest to the truthfulness of the information listed on the attached transfer agreement.
[ ]	In accordance with Alabama Rules & Regulations 20-X-5-.01(4), any social security number disclosed under this regulation shall be used for the purpose of investigation or verification by the ABC Board and shall not be a matter of public record.
[ ]	The undersigned agree, if a license is issued as herein applied for, to comply at all times with and to fully observe all the provisions of the Alabama Alcoholic Beverage Control Act, as appears in Code of Alabama, Title 28, and all laws of the State of Alabama relative to the handling of alcoholic beverages. The undersigned, if issued a license as herein requested, further agrees to obey all rules and regulations promulgated by the board relative to all alcoholic beverages received in this State. The undersigned, if issued a license as herein requested, also agrees to allow and hereby invites duly authorized agents of the Alabama Alcoholic Beverage Control Board and any duly commissioned law enforcement officer of the State, County or Municipality in which the license premises are located to enter and search without a warrant the licensed premises or any building owned or occupied by him or her in connection with said licensed premises. The undersigned hereby understands that he or she violate any provisions of the aforementioned laws his or her license shall be subject to revocation and no license can be again issued to said licensee for a period of one year. The undersigned further understands and agrees that no changes in the manner of operation and no deletion or discontinuance of any services or facilities as described in this application will be allowed without written approval of the proper governing body and the Alabama Alcoholic Beverage Control Board.
[ ]	I hereby swear and affirm that I have read the application and all statements therein and facts set forth are true and correct, and that the applicant is the only person interested in the business for which the license is required.

Applicant Name (print): Robert Meeks

Signature of Applicant:

Notary Name (print): Sandy Durham

Notary Signature: Sandy Durham

Commission expires: 9/26/29

Application Taken: 5/19/26 **App. Inv. Completed:**
Submitted to Local Government:
Received in District Office: **Reviewed by Supervisor:**

Forwarded to District Office:
Received from Local Government:
Forwarded to Central Office:

STATE OF ALABAMA
ALCOHOLIC BEVERAGE CONTROL BOARD
ALCOHOL LICENSE APPLICATION
Confirmation Number: 20260519144700583

Private Clubs / Special Retail / or Special Events licenses ONLY

Private Club
Does the club charge and collect dues from elected members? N/A
Number of paid up members:
Are meetings regularly held? N/A
How often?
Is business conducted through officers regularly elected? N/A
Are members admitted by written application, investigation, and ballot? N/A
Has Agent verified membership applications for each member listed? N/A
Has at least 10% of members listed been confirmed and highlighted? N/A Agent's Initials:
For what purpose is the club organized?
Does the property used, as well as the advantages, belong to all the members? N/A
Do the operations of the club benefit any individual member(s), officer(s), director(s), agent(s), or employee(s) of the club rather than to benefit of the entire membership? N/A

Special Retail
Is it for 30 days or less? N/A
More than 30 days? N/A

Franchisee or Concessionaire of above? N/A
Other valid responsible organization: N/A
Explanation:

Special Events / Special Retail (7 days or less)
Starting Date: Ending Date:
Special terms and conditions for special event/special retail:

Other Explanations

STATE OF ALABAMA
ALCOHOLIC BEVERAGE CONTROL BOARD
Confirmation Number: 20260519144700583

NOTICE OF TRANSFER OF ABC LICENSED BUSINESS

NOTE: A Copy of Operating Agreement Must be Attached To Application

CURRENT LICENSEE:
THE PEOPLES ROOM LLC
Address: 78 SAINT FRANCIS ST
MOBILE , AL 36602
Telephone:

NEW APPLICANT:
MBROS LLC
Address: 78 SAINT FRANCIS ST
MOBILE, AL 36602
Telepho

Current License No: 105305

LICENSED PREMISES ADDRESS: 78 SAINT FRANCIS ST MOBILE, AL 36602

THE AFORENAMED HEREBY SERVE NOTICE TO THE ABC BOARD OF THE ATTACHED CONTRACTUAL AGREEMENT GOVERNING THE CONTINUATION OF SALES OF ALCOHOLIC BEVERAGES ON THE LICENSED PREMISES.

The Parties to this agreement hereby acknowledge and affirm that the New (Applicant) Licensee will, at all times, act as the AGENT for the Current (Named) Licensee, and the Current Licensee shall act as PRINCIPAL for the purposes of the attached Agreement. The Principal shall be bound by all acts and/or omissions of the Agent in the operation of the licensed premises.

The Current Licensee is now and shall remain liable for any violations of ABC Rules and Regulations or other Alabama Law for the duration of the attached Agreement; and, further, that the Current Licensee has the right and authority, under Alabama Law, to surrender the ABC License to the ABC Board at any time.

The parties acknowledge that the operation of the licensed premises shall remain subject to inspection by ABC Enforcement, and must comply with all State and Local regulations and Laws, and that the local ABC Enforcement District Office must be immediately notified of any change in the attached Agreement.

THE CURRENT LICENSE WILL NOT BE RENEWED.

WITNESS our hands and seals on this the 19 day of May, 2024.

CURRENT LICENSEE (NAMED ON LICENSE)

Print Name:
Title:

NEW LICENSEE (APPLICANT)

Print Name: Jay Mills
Title: member

WITNESS: (By ABC Enforcement) Sandy Durham

Revised 9/08

STATE OF ALABAMA
ALCOHOLIC BEVERAGE CONTROL BOARD
Confirmation Number: 20260519144700583

NOTICE OF TRANSFER OF ABC LICENSED BUSINESS

NOTE: A Copy of Operating Agreement Must be Attached To Application

CURRENT LICENSEE:
THE PEOPLES ROOM LLC
Address: 78 SAINT FRANCIS ST
MOBILE , AL 36602
Telephon

NEW APPLICANT:
MBROS LLC
Address: 78 SAINT FRANCIS ST
MOBILE, AL 36602
Telephone

Current License No: 105305

LICENSED PREMISES ADDRESS: 78 SAINT FRANCIS ST MOBILE, AL 36602

THE AFORENAMED HEREBY SERVE NOTICE TO THE ABC BOARD OF THE ATTACHED CONTRACTUAL AGREEMENT GOVERNING THE CONTINUATION OF SALES OF ALCOHOLIC BEVERAGES ON THE LICENSED PREMISES.

The Parties to this agreement hereby acknowledge and affirm that the New (Applicant) Licensee will, at all times, act as the AGENT for the Current (Named) Licensee, and the Current Licensee shall act as PRINCIPAL for the purposes of the attached Agreement. The Principal shall be bound by all acts and/or omissions of the Agent in the operation of the licensed premises.

The Current Licensee is now and shall remain liable for any violations of ABC Rules and Regulations or other Alabama Law for the duration of the attached Agreement; and, further, that the Current Licensee has the right and authority, under Alabama Law, to surrender the ABC License to the ABC Board at any time.

The parties acknowledge that the operation of the licensed premises shall remain subject to inspection by ABC Enforcement, and must comply with all State and Local regulations and Laws, and that the local ABC Enforcement District Office must be immediately notified of any change in the attached Agreement.

THE CURRENT LICENSE WILL NOT BE RENEWED.

WITNESS our hands and seals on this the 28th day of May, 2026.

Jacinto Silvestre Colunga
Commission Expires
Notary Public
12/05/2028
State of Alabama at Large

CURRENT LICENSEE (NAMED ON LICENSE)

JAMES G. PENNINGTON
Print Name:
Title: OWNER OPERATOR

NEW LICENSEE (APPLICANT)

Print Name:
Title:

WITNESS: (By ABC Enforcement) _____
Revised 9/08

State of AL County of Baldwin

I certify this is to be a complete, exact and true copy of the original document.
Certified this 28th day of May, 2026.

Jacinto Silvestre Colunga
Notary Public
My Commission Expires: 12/5/28

STATE OF ALABAMA
ALCOHOLIC BEVERAGE CONTROL BOARD
Confirmation Number: 20260519144700583

NOTICE OF TRANSFER OF ABC LICENSED BUSINESS

NOTE: A Copy of Operating Agreement Must be Attached To Application

CURRENT LICENSEE:
THE PEOPLES ROOM LLC
Address: 78 SAINT FRANCIS ST
MOBILE, AL 36602
Telepho

NEW APPLICANT:
MBROS LLC
Address: 78 SAINT FRANCIS ST
MOBILE, AL 36602
Telephone:

Current License No: 105305

LICENSED PREMISES ADDRESS: 78 SAINT FRANCIS ST MOBILE, AL 36602

THE AFORENAMED HEREBY SERVE NOTICE TO THE ABC BOARD OF THE ATTACHED CONTRACTUAL AGREEMENT GOVERNING THE CONTINUATION OF SALES OF ALCOHOLIC BEVERAGES ON THE LICENSED PREMISES.

The Parties to this agreement hereby acknowledge and affirm that the New (Applicant) Licensee will, at all times, act as the AGENT for the Current (Named) Licensee, and the Current Licensee shall act as PRINCIPAL for the purposes of the attached Agreement. The Principal shall be bound by all acts and/or omissions of the Agent in the operation of the licensed premises.

The Current Licensee is now and shall remain liable for any violations of ABC Rules and Regulations or other Alabama Law for the duration of the attached Agreement; and, further, that the Current Licensee has the right and authority, under Alabama Law, to surrender the ABC License to the ABC Board at any time.

The parties acknowledge that the operation of the licensed premises shall remain subject to inspection by ABC Enforcement, and must comply with all State and Local regulations and Laws, and that the local ABC Enforcement District Office must be immediately notified of any change in the attached Agreement.

THE CURRENT LICENSE WILL NOT BE RENEWED.

WITNESS our hands and seals on this the 28th day of May, 20 26.

CURRENT LICENSEE (NAMED ON LICENSE)

JAMES G. PENNINGTON
Print Name:
Title: OWNER OPERATOR

NEW LICENSEE (APPLICANT)

Print Name:
Title:

Jacinto Silvestre Colunga
Commission Expires
Notary Public
12/05/2028
State of Alabama at Large

State of AL County of Baldwin

I certify this is to be a complete, exact and true copy of the original document.
Certified this 28th day of May, 20 26.

Jacinto Silvestre Colunga
Notary Public
My Commission Expires: 12/5/28

WITNESS: (By ABC Enforcement)
Revised 9/08

******APPLICANT COPY******

Alabama ABC Board
Licensing and Compliance Division
Criminal Background Check

4/29/2026

This form certifies that the criminal background check for the individual listed below has been received and reviewed by the Alabama ABC Board Licensing and Compliance Division and satisfies the background check requirements set forth in Title 28, Code of Alabama 28-3A-23(2-3), 28-12-40, and ABC Regulation 20-X-5-.01(b).

Applicants should retain a copy of this form for their records, as this verification may be used to satisfy the criminal background check requirement for any subsequent ABC applications submitted within two (2) years of the original background check date listed below.

Applicant's First, Middle, Last Name: ROBERT MEEKS
Last 4-digits of Social:
Birth Date (MM/DD/YYYY):
Date of Original Background Check: 4/22/2026
Form Expires: 4/22/2028

******APPLICANT COPY******

Alabama ABC Board
Licensing and Compliance Division
Criminal Background Check

4/29/2026

This form certifies that the criminal background check for the individual listed below has been received and reviewed by the Alabama ABC Board Licensing and Compliance Division and satisfies the background check requirements set forth in Title 28, Code of Alabama 28-3A-23(2-3), 28-12-40, and ABC Regulation 20-X-5-.01(b).

Applicants should retain a copy of this form for their records, as this verification may be used to satisfy the criminal background check requirement for any subsequent ABC applications submitted within two (2) years of the original background check date listed below.

Applicant's First, Middle, Last Name: JAY MEEKS
Last 4-digits of Social:
Birth Date (MM/DD/YYYY):
Date of Original Background Check: 4/22/2026
Form Expires: 4/22/2028

STATE OF ALABAMA

DOMESTIC LIMITED LIABILITY COMPANY (LLC)
CERTIFICATE OF FORMATION

PURPOSE: In order to form a Limited Liability Company (LLC) under Section 10A-5A-2.01 of the *Code of Alabama 1975*, this Certificate of Formation and the appropriate filing fees must be filed with the Office of the Secretary of State. **The information required in this form is required by Title 10A.**

1. The name of the limited liability company (must contain the words "Limited Liability Company" or the abbreviation "L.L.C." or "LLC," and comply with *Code of Alabama*, Section 10A-1-5.06. You may use Professional or Series before Limited Liability Company or LLC (or PLLC or SLLC) if they apply:

   MBros, LLC

2. **A copy of the Name Reservation Certificate from the Office of the Secretary of State must be attached.**

3. The name of the registered agent (only one agent): Robert Meeks

   Street (**no PO Boxes**) address of registered office (must be located in Alabama): _____

   _____

   *COUNTY of above address: MOBILE

   Mailing address in Alabama of registered office (if different from street address): _____

   _____

4. The undersigned certify that there is at least one member of the limited liability company.

(For SOS Office Use Only)

Alabama
Sec. Of State

001-242-604 DLL

Date	03/19/2026
Time	10:53:00
File	$100.00
County	$100.00
Total	$200.00

2026

SALES TAX LICENSE

State of Alabama

Alabama Department of Revenue

ISSUED TO:

MBROS, LLC
78 SAINT FRANCIS ST
MOBILE, AL 36602-3811

ACCOUNT TYPE	ACCOUNT NUMBER	EFFECTIVE DATE	EXPIRATION DATE
SLS	R012788372	04/1/2026	12/31/2026

TO ENGAGE IN BUSINESS FOR WHICH TAX IS IMPOSED BY SECTIONS 40-23-1/40 CODE OF ALABAMA 1975, AS AMENDED. SALES TAX LAW

NON-TRANSFERABLE

THIS ACCOUNT ISSUED TO PERSON OR BUSINESS WHOSE NAME APPEARS ABOVE IS NOT TRANSFERABLE. THE LICENSEE MAY PURCHASE ITEMS TAX EXEMPT FOR THE PURPOSE OF RESALE AT RETAIL IN THE REGULAR COURSE OF BUSINESS.

STATE OF ALABAMA
DEPARTMENT OF REVENUE

Jennifer Byrd

Deputy Commissioner

NAICS CODE: 711130

IRS Notice CP575B

Department Of the Treasury
Internal Revenue Service
Philadelphia, PA 19255-0023
Important Information - Please Read

MBROS LLC
THE PEOPLES ROOM OF MOBILE
%ROBERT MEEKS MBR

February 06, 2026

We assigned you an employer identification number (EIN)

Your EIN is **41-4110396**. The name control associated with this EIN is **MBRO**.

What you need to do

- If you did **not** apply for this EIN, visit IRS.gov/EINNotRequested.
- Use this EIN and your name exactly as they appear above when you fill out your tax returns. Otherwise, it may cause delays. Keep a copy of this notice for your records because we'll only send it to you once. You can share a copy with future officers of your organization or anyone asking for proof of your EIN. If your name or address is incorrect as shown, send the correct information to the address at the top of this notice.
- You must file the following forms by the dates shown.

Form	Due Date
1065	03/15/2026

What you need to know

If you need to pay certain types of taxes, like employment or corporate income taxes, we'll send you a package with instructions. The package will tell you how to pay your taxes online using the Electronic Federal Tax Payment System (EFTPS). We'llll also send you a personal identification number (PIN) separately. Be sure to activate your PIN when you receive it, so you can start using the EFTPS. To learn more about EFTPS, refer to Publication 966, Electronic Choices to Pay All Your Federal Taxes.

If a Limited Liability Company (LLC) elects to be classified as an association taxable as a corporation, the LLC must file Form 8832, Entity Classification Election. If an LLC wants to elect S corporation status and meets certain criteria, the LLC must timely file Form 2553, Election by a Small Business Corporation. In that instance, we'll treat the LLC as a corporation as of the effective date of the S corporation election and the LLC doesn't need to file Form 8832. Visit IRS.gov/LLC and refer to Publication 3402, Taxation of Limited Liability Companies, for more information.

Additional Information

- Refer to Publication 4557, Safeguarding Taxpayer Data: A Guide for Your Business, for tips on keeping your EIN safe.
- Find tax forms or publications by visiting IRS.gov/Forms or by calling 800-TAX-FORM (800-829-3676).
- Call us at 800-829-4933 if you can't find what you need online. If you prefer, you can write to the address at the top of this notice.

MCHD
mobile county health department
A legacy of excellence since 1816

June 22, 2026

ATTN: Robert Meeks
The People's Room of Mobile
78 St Francis Street
Mobile, AL 36602

Dear Mr. Meeks:

RE: The People's Room of Mobile/Robert Meeks No MCHD Permit Required

The Mobile County Health Department, Inspection Services recognize that The People's Room of Mobile will provide only canned and bottled beverages for sale at their location, 78 St Francis Street Mobile, Alabama, 36602. The beverages will not be opened or poured into cups but sold only as canned and bottled beverages. No mixed drinks will be offered for sale, and no ice will be added to the beverages provided.

This business model as described does not require an inspection, approval to operate, or a food permit from the Mobile County Health Department, as no TCS foods are sold and no open foods (e.g. beverages) are being handled, and therefore operationally does not meet the definition of a "Food Establishment" under the Rules of the State Board of Health for Food Establishment Sanitation 420-3-22-.08 and 420-3-22-.01-(4)-22 & 23.

In the event that The People's Room of Mobile decides to change their status or nature of operation to where they offer beverages that they mix, pour into a cup, or offer TCS food items, a permit will then be required and the owner/operator must contact Mobile County Health Department, Inspection Services for verification, approval, and permitting requirements. Construction plans showing compliance with the Food Rules for the layout, fixtures, and exposed surfaces would be required to be submitted for review and application for food permit made before a food permit would be issued.

Robert Meeks and The People's Room of Mobile are responsible for verifying with all other local governing agencies any additional requirements of their applicable codes, plan review, licensing, and permitting process and to acquire any necessary permits, licenses, or approvals to sell the canned and bottled alcoholic beverage products.

Respectfully,

Brad Philips, B.S.
District Manager, Inspection Services
Mobile County Health Department
251-690-8116

[redacted]

State of Alabama

Rev. 1/1/2017

COMMERCIAL LEASE AGREEMENT

This Commercial Lease Agreement (this "Agreement") is made this 22 ~~day of February 2026~~ 21st day of March, 2026 by and between Frank Raue, an individual located at P O Box 441 Esparto CA 95627 ("Landlord") and MBros LLC dba The People's Room of Mobile an entity located at 78 St Francis St Mobile AL 36602 ("Tenant") In consideration of the mutual covenants herein contained the parties agree as follows

1. Demised Premises. The premises leased shall consist of a building (the "Real Property") located at 78 St Francis St. Mobile, AL 36602 (the "Demised Premises")

A) Size of Premises. The Demised Premises consists of approximately one thousand (1000) square feet and comprises approximately 100% of the total leasable area in the building or complex The square footage of the Demised Premises shall be determined by measuring from the outside of all exterior walls to the centerline of any demising walls Landlord s architect or building contractor may measure the Demised Premises to make a final determination of the size

B) Reserved Uses. Landlord reserves to itself the use of the roof exterior walls and the area above and below the Demised Premises, together with the right to install maintain use repair and replace pipes ducts conduits wires and structural elements leading through the Demised Premises and which serve either the Demised Premises or other parts of the building or complex

C) Common Area. This Agreement and the Demised Premises does not include the use by Tenant of any Common Areas of the Real Property The term "Common Area" shall mean all areas and improvements in the Real Property which are not leased or held for lease to tenants

D) Parking Spaces. Tenant including its guests employees agents and customers does not have the right to use any parking space(s) on the Real Property

E) Storage Facilities. This Agreement and the Demised Premises does not include the use of any storage facilities on the Real Property

2. Agreement to Lease. Landlord agrees to lease to Tenant and Tenant agrees to lease from Landlord the Demised Premises according to the terms and conditions of this Agreement

3. Term of Lease. The term of this Agreement shall commence on March 01 2026 ("Commencement Date") and ending at midnight on March 01 2027 ("Termination Date")

A) Renewal. Provided Tenant is not in default in the performance of this Agreement Tenant shall have the option to renew this Agreement for an additional one (1) year term(s) commencing on the Termination Date by providing notice as described in subsection B herein All of the terms and conditions of this Agreement shall apply during each renewal term

B) Notice of Renewal. The option to renew this lease pursuant to subsection A above shall be exercised by providing written notice given to Landlord not less than thirty (30) days prior to the Termination Date. If written notice is not given in the manner provided herein within the time specified, this option shall lapse and expire.

4. Rental Terms. With respect to the terms of the rental:

A) Base Rent. Tenant shall pay to Landlord, from the Commencement Date and throughout the term of this Agreement, $1,150.00, payable on a monthly basis ("Base Rent"). Base Rent is due no later than the 1st day of the payment period. Base Rent is payable by check mailed to Landlord at the address stated above, or as otherwise agreed upon by the parties.

B) Operating Cost. Landlord shall pay all Operating Cost on the Real Property. "Operating Cost" means the total cost and expense incurred in operating, managing, insuring, equipping, lighting, repairing, maintaining and policing the Real Property, including the exterior of the Real Property and the common areas, and specifically including, without limitation, items of expense for or related to: insurance premiums and deductibles, management, bookkeeping.

C) Taxes. Landlord shall pay all real estate taxes and assessments levied against all or any part of the Demised Premises, the Real Property, and the improvements thereon.

D) Payment of Rent. Base Rent and Operating Cost under this Agreement may collectively be referred to as "Rent" or "Rents." All Rents shall be made payable to Landlord and delivered to the address stated above or to another address as Landlord may designate upon reasonable notice to Tenant.

E) Partial Payments. Any partial payments shall be applied to the earliest installment due, and no endorsement or statement on any check or any letter accompanying any check or payment as to same shall be deemed an accord and satisfaction, and Landlord may accept such check or payment without prejudice to Landlord's right to recover the balance of such installment and any other amounts then due or to pursue any other remedy of Landlord set forth in this Agreement.

F) Past Due Payments. If any amount due under this Agreement remains unpaid ten (10) days after it is due, a late charge equal to 10% of the monthly rent ("Late Charge"), not to exceed the maximum amount allowed by law, shall be paid by Tenant to Landlord until such time as Tenant is current on all amounts due Landlord (including all Late Charges). In the event Landlord receives a payment from Tenant which is returned for insufficient funds, Landlord may, without limiting Landlord's other remedies, charge Tenant a fee in the amount of $100.00 to cover Landlord's overhead and administrative expenses and/or require that all payments thereafter be bank certified or cashier's checks. In addition, all service charges from Tenant's financial institution due to non-sufficient funds shall be paid by Tenant.

G) Security Deposit. Tenant shall, at the time of executing this Agreement, deposit with Landlord as a security deposit the sum of $0.00, which amount shall serve as security for the full performance of the obligations and covenants of Tenant under this Agreement. Such deposit shall not accrue interest

for Tenant, shall not be considered a Rental payment, final or otherwise, and shall not be considered to limit or relieve Tenant from any obligation or liability to Landlord. In the event of a default by Tenant under the terms of this Agreement, Landlord may apply such deposit toward the cure of such default without notice to Tenant. Upon complete performance by Tenant of all its obligations under or with respect to this Agreement, any remaining portion of such deposit to which Tenant is entitled shall be refunded to Tenant. Landlord may transfer the security deposit to any purchaser of Landlord's interest in the Demised Premises, in which event Landlord shall be discharged from any further liability with respect to such deposit and Tenant will look solely to the purchaser of Landlord's interest for any return of said deposit.

H) Holding Over. If Tenant remains in possession of the Demised Premises after the expiration of the initial Lease Term or any renewal Term without the execution of a new lease, it shall be deemed to be a tenant from month-to-month, subject to all conditions, provisions and obligations of this Agreement insofar as the same are applicable to a month-to-month tenancy except that the Base Rent shall be one (1) times the Base Rent applicable immediately prior to the expiration of the Term.

5. Use, Occupancy and Condition of Premises. With respect to use and occupancy:

A) Use and Occupancy. Tenant shall use and occupy the Demised Premises for the commercial purpose of music venue, rental, and/or any other legal/licensed business. and related activities. The Demised Premises shall be used for no other purpose without the advance written consent of Landlord. Tenant shall operate the Demised Premises in a clean and dignified manner and in compliance with all applicable laws, regulations, rules, and ordinances. Tenant shall provide its own janitorial services. Tenant shall use the Demised Premises for no unlawful purpose or act; shall commit or permit no waste or damage to the Demised Premises; shall, at Tenant's expense, comply with and obey all applicable laws, regulations, or orders of any governmental authority or agency; shall not do or permit anything to be done in or about the Demised Premises which will in any way obstruct or interfere with the rights of other tenants or occupants of the Real Property; and shall comply with all the rules and requirements promulgated by Landlord with respect to the Real Property, as the same may be amended from time to time. Tenant agrees as follows:

I. No smoking in the Demised Premises or within ten (10) feet or any doorway.

II. All garbage and refuse shall be kept in the size and kind of container, and in a location approved by Landlord. Tenant shall not burn any trash or garbage in or about the Real Property.

III. No activity will take place on the Demised Premises or common areas which shall cause any odor which can be smelled other than by persons who are within the Demised Premises.

IV. Tenant shall keep the Demised Premises at a temperature sufficiently high to prevent freezing of water in pipes and fixtures.

V. Tenant shall not permit or place any obstructions or merchandise in any common areas, including but not limited to, corridors, all sidewalks in front of, on the side of, or in the back of the Demised Premises.

VI. The plumbing facilities in the Demised Premises shall not be used for any purpose other than that for which they are constructed, and no foreign substance of any kind shall be thrown therein, and the expense of any breakage, stoppage, or damage resulting from a violation of this provision shall be borne by Tenant. Tenant shall be responsible for the proper and lawful disposal of all cooking grease used within the Demised Premises.

VII. Tenant shall keep all windows, window sills, window frames and exterior signs of the Demised Premises clean.

VIII. No merchandise shall be stored in the Demised Premises except that which Tenant is selling in the normal course of business in, at, or from the Demised Premises.

IX. No auctions or tent sales shall be held within the Demised Premises or on or within any portion of the Real Property, except with the prior written consent of Landlord.

X. Landlord shall have the right to prohibit the continued use by Tenant of any unethical or unfair method of business operation, advertising or interior display if, in Landlord's opinion, the continued use thereof would impair the reputation of the Real Property as a first class facility or is otherwise out of harmony with the general character thereof, and upon notice from Landlord shall forthwith refrain from or discontinue such activities.

XI. Tenant shall keep the Demised Premises (including without limitation, exterior and interior portions of all windows, doors and all other glass) in a neat, clean and sanitary condition, free of all insects, rodents, vermin and pests of every type and kind.

XII. Tenant shall not use the Demised Premises for any purpose or business which is noxious or unreasonably offensive because of the emission of noise, smoke, dust or odors.

XIII. Tenant shall keep the entry ways and sidewalk/walkway in front of the Demised Premise clear of all debris, trash and litter, and shall keep the same swept, maintained and snow and ice removed therefrom.

B) Environmental Restrictions. Tenant shall not use the Demised Premises for any activities involving, directly or indirectly, the use, generation, treatment, storage or disposal of any hazardous or toxic chemical, material, substance or waste ("Hazardous Material"), and that the Demised Premises will be used only in compliance with any and all environmental laws, rules and regulations applicable thereto. Landlord shall have the right, but not the duty, to inspect the Demised Premises and conduct tests thereon should Landlord have a reasonable belief there is Hazardous Material on the Demised Premises. In the event tests indicate the presence of such Hazardous Material, and Tenant has not removed the Hazardous Material on demand, Landlord shall have the right to immediately enter the Demised Premises to remedy any contamination found thereon. In exercising its rights herein, Landlord shall use reasonable efforts to minimize interference with Tenant's business, but such entry shall not constitute an eviction of Tenant, in whole or in part, and Landlord shall not be liable for any interference, loss, or damage to Tenant's property or business caused thereby, provided such

contamination is not caused by or the result of Landlord's actions, or the actions. If any lender or governmental agency shall ever require testing to ascertain whether there has been a release of Hazardous Material, then the reasonable costs thereof shall be reimbursed by Tenant to Landlord upon demand as additional Rent if such requirement arose because of Tenant's storage or use of Hazardous Material on the Demised Premises. Tenant shall execute affidavits, representations and the like from time to time, at Landlord's reasonable request, concerning Tenant's best actual knowledge and belief regarding the presence of any Hazardous Material on the Demised Premises or Tenant's intent to store or use Hazardous Material on the Demised Premises.

C) Condition and Acceptance of Premises. Tenant accepts the Demised Premises in their current condition and acknowledges that the Demised Premises is in good order and repair, unless otherwise indicated herein. By occupying the Demised Premises, Tenant shall be conclusively deemed to have accepted the Demised Premises as being in the condition required by this Agreement. If requested by Landlord, Tenant will sign a statement confirming the Commencement Date and ratifying acceptance of the Demised Premises. In addition, Tenant shall have a thirty (30) day waiting period to discover any defects and shall notify Landlord immediately of the same.

6. Property in Demised Premises. With respect to the property:

A) Right to Leasehold Improvements. All leasehold improvements (other than Tenant's trade fixtures), such as light fixtures and heating and air conditioning equipment, shall, when installed, attached to the freehold and become and remain the property of Landlord. All Tenant's trade fixtures shall remain the property of Tenant, subject at all times to any of Landlord's liens for Rental and other sums which may become due to Landlord under this Lease or otherwise. Tenant shall be allowed to remove all such trade fixtures upon termination of this Lease, provided that Tenant is not in default in any of the terms and provisions of this Lease.

B) Risk and Loss of Tenant's Personal Property. All of Tenant's personal property which may at any time be in the Demised Premises shall be at Tenant's sole risk, or at the risk of those claiming under Tenant. Landlord shall not be liable for any damage to said property or loss of business suffered by Tenant which may be caused by water from any source whatsoever including the bursting, overflowing, or leaking of sewer or steam pipes or from the heating or plumbing fixtures or from electric wires or from gas or odor or leaking of the fire suppression system.

7. Repairs and Maintenance. With respect to repair and maintenance obligations:

A) Landlord's Obligation to Repair and Maintain. Landlord shall be responsible for repairing and maintaining the Demised Premises in good condition and for making such modification or replacements thereof as may be necessary or required by law or ordinance, specifically for the following:

- Foundation and structural components of the building
- Roof, gutters and downspouts
- Any repairs over $300.00

- Heating, ventilation and air conditioning systems. Major Plumbing issues, Major electrical issues.

- Storefront Glass

Landlord reserves and at all times shall have the right to enter the Demised Premises in any emergency and also during regular business hours upon advance written notice to inspect the same, and to repair the Demised Premises and any portion of the Real Property or Common Area, without abatement of Rent.

B) Tenant's Obligation to Repair and Maintain. All maintenance, repairs, or replacements relating to the Demised Premises which are not the obligation of Landlord shall be the obligation of Tenant and shall be made by Tenant at Tenant's sole cost and expense. Tenant shall keep and maintain the Demised Premises in good repair and order at all times. Tenant shall be responsible for the maintenance, repair and replacement of the following:

- Filters, Basic upkeep.

C) Remodeling. Tenant shall not do the following:

D) No Liens Permitted. No person shall ever be entitled to any lien, directly or indirectly, derived through or under Tenant, or through or under any act or omission of Tenant, upon the Demised Premises, or any improvements now or hereafter situated thereon, or upon any insurance policies taken out upon the Demised Premises, or the proceeds thereof, for or on account of any labor or materials furnished to the Demised Premises, or for or on account of any matter or thing whatsoever; and nothing in this Agreement contained shall be construed to constitute a consent by Landlord to the creation of any lien. In the event that any such lien shall be filed, Tenant shall cause such lien to be released within seven (7) days after actual notice of the filing thereof, or shall within such time certify to Landlord that Tenant has a valid defense to such claim and such lien and furnish to Landlord a bond, satisfactory to Landlord, indemnifying Landlord against the foreclosure of such lien. In addition to any other remedy herein granted, upon failure of Tenant to discharge such lien or to post a bond indemnifying Landlord against foreclosure of any such lien as above provided, Landlord, after notice to Tenant, may discharge such lien, and all expenditures and costs incurred thereby, with interest thereon, shall be payable as further Rent hereunder at the next Rent payment date.

8. Insurance and Indemnification. With respect to insurance and indemnification:

A) Tenant's Public Liability and Property Damage Insurance. Tenant shall purchase and maintain public liability and property damage insurance insuring against loss, cost and expense by reason of injury to or the death of persons or damage to or the destruction of property arising out of or in connection with the occupancy or use by Tenant, its employees, agents and assigns, of the Demised Premises and/or the Common Area, such insurance to include Landlord as an additional Insured, to be carried with an insurer and to have a minimum aggregate policy in the amount of no less than 1,000,000 and a deductible no greater than 2,000.

B) Certificate of Insurance. Tenant shall furnish to Landlord a certificate of insurance evidencing such coverage which provides that such policies may not be canceled on less than 14 days prior written notice to Landlord. Should Tenant fail to carry the insurance required herein and furnish Landlord with the policies or certificates of insurance after a request to do so, Landlord shall have the right to obtain such insurance and collect the cost thereof from Tenant as additional Rent.

C) Landlord's Insurance. Landlord shall keep the Real Property (but not the contents thereof or any personal property or trade or business fixtures of Tenant) insured against loss or damage by fire and other perils normally covered by standard all-risk insurance. Landlord may also maintain public liability, property damage, loss of rent, and such other coverage related to the Real Property as Landlord deems appropriate.

D) Mutual Waiver of Subrogation. If either party suffers loss or damage which is caused by the other party, but which is covered by the injured party's insurance, the injured party waives any claim it might have against the other party to the extent that it is compensated by the insurance required under this Agreement; and each party agrees to obtain from its insurer a provision and acknowledgement of this waiver and an agreement that the insurance carrier will not be subrogated to the rights of the injured party to the extent that these rights have been waived above.

E) Mutual Hold Harmless. It is agreed that Tenant shall defend, hold harmless and indemnify Landlord, its officers, agents and employees from any and all claims for injuries to persons or damage to the Demised Premises which result from the negligent acts or omissions of Tenant, its officers, agents or employees, in the performance of this Agreement. It is further agreed that Landlord shall defend, hold harmless and indemnify Tenant, its officers, agents and/or employees from any and all claims for injuries to persons and/or damage to the Demised Premises which result from the negligent acts or omissions of Landlord, its officers, agents and/or employees, in the performance of this Agreement. In the event of the concurrent negligence of Tenant and Landlord, then the liability for any and all claims for injuries or damages which arise out of the performance of the terms and conditions of this Agreement shall be apportioned in accordance with the law of the state in which the Real Property is located.

9. Signs. With respect to signs:

A) Exterior Sign. Tenant can install a sign acceptable to Landlord on the front of the Demised Premises, hereinafter referred to as "Exterior Sign" prior to opening for business. Tenant shall be solely responsible for the cost of fabrication, installation, and maintenance of the Exterior Sign. Landlord shall pre-approve signage package to be attached to the Lease for the duration of the Lease and all renewals thereof.

10. Utility Services. Commencing on the date on which Landlord delivers possession of the Demised Premises to Tenant, Tenant shall make payments for the following utilities based upon or in connection with the Demised Premises.

- Water
- Gas

- Heat
- Light
- Power
- Internet

In turn, Landlord will be responsible for making payments for the following utilities:

- None

11. Access, Surrender, and Assignment. With respect to access, surrender, and assignment:

A) Access. Tenant shall permit Landlord to inspect or examine the Demised Premises during business hours upon advanced written notice or at any time without notice in the event of an emergency, and shall permit Landlord to enter and make such repairs, alterations, improvements, or additions in the Demised Premises or the Real Property of which the Demised Premises is a part, that Landlord may deem necessary.

B) Surrender. Tenant shall deliver and surrender to Landlord possession of the Demised Premises upon expiration of this Agreement, or upon earlier termination as herein provided, in as good condition and repair as the same shall be on the Commencement Date.

C) Removal and Restoration. Any and all trade fixtures and equipment installed by Tenant may be removed by Tenant at the termination of this Agreement, provided that Tenant shall not be in default in the performance of any of Tenant's obligations hereunder and provided that Tenant shall repair any and all damage caused to the Demised Premises by the removal of any such trade fixtures and equipment. Any property not so removed at the expiration of the Term hereof shall be deemed to have been abandoned by Tenant and may be retained or disposed by Landlord. Tenant shall not remove any leasehold improvements or non-trade fixtures and shall surrender the Demised Premises upon termination of the tenancy created by this Agreement in the same condition as the Demised Premises were required to have been in on the Commencement Date, ordinary wear and tear and damage by fire or other insured casualty excepted.

D) Assignment and Subletting. Tenant shall not assign, mortgage, encumber or transfer any interest in this Agreement, or sublet the Demised Premises in whole or in part, nor grant a license or concession in connection therewith without Landlord's prior written consent, which consent shall be at Landlord's sole discretion.

12. Damage to Premises. With respect to damage to the Premises:

A) Substantial Damage. In the event the Demised Premises or the Real Property of which the Demised Premises constitute a part shall be damaged or destroyed by fire or other casualty to the extent that the cost of repairing or replacing the same will equal or exceed $300.00 of the then replacement value thereof, then the parties may, at their option, within ten (10) days after the occurrence of such casualty, terminate this Agreement upon written notice.

B) Partial Damage. In the event the Demised Premises or the Real Property of which the Demised Premises constitute a part shall be partially damaged or destroyed by fire or other casualty to the extent that the cost of repairing or replacing the same will be less than $300.00 of the then replacement value thereof, or in the event Landlord does not elect to terminate this Agreement as a result of substantial damage, then Landlord shall repair the damage with reasonable dispatch after notice of such casualty; provided, however, the Landlord's obligation to repair or restore shall not be limited to restoring the structural portions of the Demised Premises and shall include repairs or the restoration of any of Tenant's fixtures, improvements or other alterations made by Tenant in or upon the Demised Premises. Notwithstanding anything provided herein to the contrary, the Landlord's obligation to repair or rebuild shall be limited to the amount of the fire insurance proceeds received by Landlord (less any costs incurred by Landlord in collecting the same) as a result of any such casualty. In the event the fire insurance proceeds received by Landlord (less any costs incurred by Landlord in collecting the same) are insufficient to rebuild the Demised Premises and/or the Real Property, then Landlord shall have the option to terminate the Lease upon notice to Tenant within ten (10) days after Landlord's receipt of the entire net insurance proceeds payable with respect to such fire or casualty.

C) Rents Upon Damage or Destruction. In the event this Agreement is terminated in the manner set forth above, the Rents shall be apportioned to the time of such casualty. In the event this Agreement is not terminated and Landlord elects to restore or repair the Demised Premises, then the Rent payable by Tenant shall be equitably abated based on the square footage in the Demised Premises which are useable, until such time as the damage to the Demised Premises has been repaired; provided, however, in no event shall there be any abatement of the payment of any Operating Costs.

13. Eminent Domain. With respect to eminent domain:

A) Condemnation of Demised Premises. If the whole or any substantial part of the Demised Premises shall be taken or acquired by any public or quasi-public authority under the power or threat of eminent domain, for other than a temporary period, the Lease Term shall cease as of the day possession shall be taken by such public or quasi-public authority, and Tenant shall pay Rent up to that date with an appropriate refund by Landlord of any rent which may have been paid in advance for any period subsequent to the date possession is taken. In the event that during the term of this Agreement the Demised Premises, or any part thereof, or more than 1% of the Real Property or of the Common Area is taken by condemnation or right of eminent domain, or by private purchase in lieu thereof, this Agreement and the term hereby granted shall be terminable at Landlord's sole option and if Landlord so terminates then this Agreement shall expire on the date when possession shall be taken by the condemnor and the Base Rent herein reserved shall be apportioned and paid in full to that date and all prepaid Base Rent shall forthwith be repaid by Landlord to Tenant. In the event Landlord does not elect to cancel or terminate this Agreement as provided above, then Landlord shall rebuild and restore the Demised Premises as nearly as possible to their condition immediately prior to any such taking and this Agreement shall continue in full force and effect except that, during such restoration, the Base Rent payable pursuant to the terms of this Agreement shall be equitably apportioned in the proportion that the square footage of the part of the Demised Premises so taken bears to the total square footage of the Demised Premises immediately prior to such taking; provided, however, in no event shall there be any abatement of the payment of any Operating Costs, provided further, however, the Landlord's obligations to restore or rebuild shall be limited to an amount which does not exceed

the proceeds obtained from such taking (less expenses incurred in collecting the same). Notwithstanding the foregoing, in the event the net condemnation award received by Landlord is insufficient to restore or rebuild the structural portions of the Demised Premises the Landlord shall have the option within ten (10) days after Landlord's receipt of the net condemnation, to cancel and terminate this Agreement, and Tenant shall be limited to consequential damages only.

B) Condemnation Award. All compensation awarded or paid upon any total or partial taking of the Demised Premises shall belong to and be the property of the Landlord. Nothing herein shall prevent Tenant from pursuing a separate award from the condemning authority for its moving expenses or for the taking of its personal property, as long as Tenant's award does not reduce Landlord's award from the condemning authority.

14. Insolvency and Bankruptcy. The appointment of a receiver to take possession of all or substantially all of the assets of Tenant or any of the persons constituting Tenant, or an assignment by Tenant or any of the persons constituting Tenant for benefit of creditors or any action taken or suffered by Tenant or any of the persons constituting Tenant under any insolvency, bankruptcy, or reorganization act, shall constitute a breach of this Agreement by Tenant. In no event shall this Agreement be assigned or assignable by operation of law or by voluntary or involuntary bankruptcy proceedings or otherwise and in no event shall this Agreement or any rights or privileges hereunder be an asset of Tenant or any of the persons constituting Tenant under any bankruptcy, insolvency, or reorganization proceedings.

15. Default. With respect to default:

A) Rights in Event of Default of Tenant. If Tenant shall abandon or vacate the Leased Premises or fail to pay Rent at the time prescribed in this Agreement, or if after fourteen (14) days written notice from Landlord, Tenant shall fail to cure any other default in the performance of its obligations under this Agreement (unless Tenant is then proceeding in good faith to cure such default and continues to do so until the default is cured), then, in addition to any other rights or remedies Landlord may have by law or otherwise, Landlord shall have the right to re-enter and take possession of the Demised Premises without legal process and remove all persons and property therefrom. Should Landlord elect to re-enter as herein provided, or should Landlord take possession pursuant to legal proceedings or pursuant to any notice provided for by law, Landlord may terminate Tenant's rights under this Agreement, re-let the Demised Premises or any part thereof for such term and at such rent and upon such other terms and conditions as Landlord in the exercise of Landlord's sole discretion may deem advisable, with the right to make alterations and repairs to the Demised Premises. Upon each such re-letting, Tenant immediately shall be liable for payment to Landlord of any indebtedness of Tenant (other than Rent due hereunder), the cost and expense of such re-letting, and of such alterations and repairs incurred by Landlord, and the amount, if any, by which the Rent reserved in this Agreement, which are Tenant's responsibility under the provisions of this Agreement for the period of such re-letting, exceeds the amount agreed to be paid as rent by the new tenant for the Demised Premises for such period of such re-letting.

B) Costs and Payment of Rents. Should Tenant at any time be in default under this Agreement, Tenant shall be liable for all costs Landlord may incur on account of such default, including the cost of recovering the Demised Premises, any and all attorney fees and court costs relating thereto. In

addition, should Landlord at any time terminate this Agreement and Tenant's rights under this Agreement for any default, in addition to any other remedy Landlord may have, Landlord may recover from Tenant all damages Landlord may incur by reason of such default, and including the Rent reserved and charged in this Agreement for the remainder of the Term discounted to present value, less the present rental value of the Demised Premises for the rest of the Term (discounted in the same manner), all of which amounts shall be immediately due and payable with attorney fees from Tenant to Landlord and without relief from valuation, and Landlord shall have no obligation to re-let. Tenant's liability for the default damages and/or re-letting costs shall survive any termination of this Agreement.

C) Right of Removal of Tenant's Property. Landlord shall have the right to remove all or any part of Tenant's property from the Demised Premises. Any property removed may be either: (a) Stored in any public warehouse or elsewhere at the cost of, and for the account of, Tenant and Landlord shall not be responsible for the care or safekeeping thereof; or (b) sold at a private or public sale and the proceeds of such sale, after sale expenses, shall be used to offset any Rent due to Landlord. Tenant hereby waives any and all loss, destruction and/or damage or injury which may be occasioned by any of the aforesaid acts.

D) Default of Landlord. Landlord shall in no event be charged with default in the performance of its obligation under this Agreement unless and until Landlord shall have received written notice from Tenant specifying wherein Landlord has failed to perform any obligation hereunder, and Landlord shall have failed to perform such obligation, or remedy such default, within fourteen (14) days of such notice from Tenant (or shall then have failed in good faith to start and be diligently pursuing the cure of any such default which reasonably takes longer than fourteen (14) days to cure).

16. Quiet Enjoyment. Landlord agrees that if Tenant pays the Rent and other charges herein provided and shall perform all of the covenants and agreements herein stipulated to be performed on Tenant's part, then Tenant shall, at all times during said Term, have the peaceable and quiet enjoyment and possession of the Demised Premises without any manner of hindrance from Landlord or any persons lawfully claiming through Landlord, except as to such portion of the Demised Premises or Real Property as shall be taken under the power of eminent domain or which may be claimed by any mortgagee of the Demised Premises of the Real Property.

17. Miscellaneous.

A) Waivers. No waiver of any condition or covenant in this Agreement by either party shall be deemed to imply or constitute a further waiver of the same or any other condition or covenant of this Agreement.

B) Subordination. Tenant agrees, at the request of Landlord, to subordinate this Agreement to any mortgage placed upon the Demised Premises or the Real Property or any one or more of them by Landlord provided that the holder of such mortgage enters into an agreement with Tenant, binding upon the successors and assigns of the parties thereto, by the terms of which such holder agrees not to disturb the possession, peaceable and quiet enjoyment and other rights of Tenant under this Agreement. In addition, so long as Tenant continues to perform its obligations hereunder, in the event of acquisition of title by said holder through foreclosure proceedings or otherwise holder agrees to

accept Tenant as tenant of the Demised Premises under the terms and conditions of this Agreement and to perform the Landlord's obligations hereunder (but only while owner of the Demised Premises), and Tenant agrees to recognize such holder or any other person acquiring title to the Demised Premises as Landlord. The parties agree to execute and deliver any appropriate instruments necessary to carry out the agreements contained herein.

C) Notices and Certificates. All notices given under this Agreement must be in writing. A notice is effective upon receipt and shall be delivered in person, by overnight courier service, via certified or registered mail, or by first class U.S. mail, postage prepaid, to Landlord and Tenant at the address as specified above, or to such other addresses which a party may designate in writing delivered to the other party for such purpose. Date of service of a notice served by mail shall be one business day following the date on which such notice is deposited in a post office box of the United States Postal Service.

D) Relationship of Parties. Nothing contained herein shall be deemed or construed by the parties hereto, nor by any third party, as creating the relationship of principal and agent, or of partnership, or of joint venture, between the parties hereto.

E) Governing Law. The terms of this Agreement shall be governed by and construed in accordance with the laws of the State of Alabama, not including its conflicts of law provisions.

F) Dispute Resolution. Any dispute arising from this Agreement shall be resolved through mediation.

G) Force Majeure. In the event that either party shall be delayed or hindered in or prevented from doing or performing any act or thing required in this Agreement by reason of strikes, lock-outs, casualties, acts of God, labor troubles, inability to procure materials, failure of power, governmental laws or regulations, riot, insurrection, war, pandemics or other causes beyond the reasonable control of such party, then such party shall not be liable or responsible for any such delays and the doing or performing of such act or thing shall be excused for the period of the delay and the period for the performance of any such act shall be extended for a period equivalent to the period of such delay.

H) Complete Agreement. This Agreement contains a complete expression of the agreement between the parties and there are no promises, representations or inducements except such as are herein provided.

I) Successors in Interest. The covenants, agreements, terms, conditions and warranties of this Agreement shall be binding upon and inure to the benefit of Landlord and Tenant and their respective heirs, executors, administrators, successors and assigns, but shall create no rights in any other person except as may be specifically provided for herein.

IN WITNESS WHEREOF, the parties have caused this Agreement to be executed by their duly authorized representatives, as of the first date written above.

L f Raue

Landlord Signature

Frank Raue

Landlord Name

MBros, LLC dba
The People's Room
of Mobile

Tenant
Full Name

Jay Meeks

Tenant Representative
Signature

Jay Meeks/Robert
Meeks
Manager/Member

Tenant
Representative
Name and Title

375 South Ripley Street
Montgomery, AL 36104

revenue.alabama.gov

Alabama Department of Revenue

March 25, 2026 Letter Id: L1238946320

ONLINE FILING INFORMATION

Dear MBROS, LLC,

Business Privilege Taxes (BPT) may be filed and paid online through My Alabama Taxes (https://myalabamataxes.alabama.gov). In My Alabama Taxes, click on the 'Create a My Alabama Taxes account' link, select Business Privilege Tax, and then enter the information below.

TAX TYPE	TAX CODE	ACCOUNT ID	SIGN ON ID	ACCESS CODE
Business Privilege Tax	PS	R012866657	003126073	96340825

This information should be treated as confidential. Only disclose your Sign on ID and Access Code to a trusted tax preparer. To view instructions on how to file returns and/or make payments using the MAT system, visit our website at https://myalabamataxes.alabama.gov and select Help in the upper right corner. If you have any questions and wish to speak to a Business Privilege Tax representative, please call 1-800-322-4106 or 334-242-1170 option 8.

E-Pay Only: The ADOR's MAT website offers taxpayers the capability to make electronic payments for the Business Privilege Tax administered by the Department. To make your payment online, simply visit our website at https://myalabamataxes.alabama.gov.

Payments of less than $750.00 are not required to be made electronically but are encouraged for faster processing times. Payments of $750.00 or more are required to be remitted electronically. See Section 41-1-20, Code of Alabama 1975 for more information. This does not mean that your BPT tax is $750.00 but only references what amount of payments are required to be electronically filed. Billing payments may also be made by telephone with debit or credit card by calling 334-353-8096. Please have your letter in hand when you call to make a payment.

In order to avoid any penalties and interest for late payment, please ensure that your payment is scheduled before 4:00pm CST of the due date.

STATE OF ALABAMA

DOMESTIC LIMITED LIABILITY COMPANY (LLC)
CERTIFICATE OF FORMATION

PURPOSE: In order to form a Limited Liability Company (LLC) under Section 10A-5A-2.01 of the *Code of Alabama 1975*, this Certificate of Formation and the appropriate filing fees must be filed with the Office of the Secretary of State. **The information required in this form is required by Title 10A.**

1. The name of the limited liability company (must contain the words "Limited Liability Company" or the abbreviation "L.L.C." or "LLC," and comply with *Code of Alabama*, Section 10A-1-5.06. You may use Professional or Series before Limited Liability Company or LLC (or PLLC or SLLC) if they apply:

   MBros, LLC

2. **A copy of the Name Reservation Certificate from the Office of the Secretary of State must be attached.**

3. The name of the registered agent (only one agent): Robert Meeks

   Street (**no PO Boxes**) address of registered office (must be located in Alabama): _____

   *COUNTY of above address: MOBILE

   Mailing address in Alabama of registered office (if different from street address): _____

4. The undersigned certify that there is at least one member of the limited liability company.

(For SOS Office Use Only)

Alabama
Sec. Of State

001-242-604 DLL

Date	03/19/2026
Time	10:53:00
File	$100.00
County	$100.00
Total	$200.00

DOMESTIC LIMITED LIABILITY COMPANY (LLC) CERTIFICATE OF FORMATION

5. Check **only** if the type applies to the Limited Liability Company being formed:

☐ Series LLC complying with Title 10A, Chapter 5A, Article 11

☐ Professional LLC complying with Title 10A, Chapter 5A, Article 8

☐ Non-Profit LLC complying with Section 10A-5A-1.04(c)

6. The filing of the limited liability company is effective immediately on the date received by the office of the Secretary of State, Business Services Division or at the delayed filing date (cannot be prior to the filing date) specified in this filing complying with Section 10A-1-4.12
The undersigned specify 3 / 19 / 2026 as the effective date (must be on or after the date filed in the office of the Secretary of State, but no later than the 90th day after the date this instrument was signed) and the time of filing to be 10 : 48 ☑ AM or ☐ PM. (cannot be noon or midnight – 12:00)

☐ Attached are any other matters the members determine to include herein (if this item is checked there must be attachments with the filing).

3 / 19 / 2026
Date (MM/DD/YYYY)

Robert Meeks
Signature as required by 10A-5A-2.04

Manager Member
Typed title (organizer or attorney-in-fact)

*County of Registered Agent is requested in order to determine distribution of County filing fees.

Wes Allen
Secretary of State

P.O. Box 5616
Montgomery, AL 36103-5616

STATE OF ALABAMA

I, Wes Allen, Secretary of State of Alabama, having custody of the Great and Principal Seal of said State, do hereby certify that

pursuant to the provisions of Title 10A, Chapter 1, Article 5, Code of Alabama 1975, and upon an examination of the entity records on file in this office, the following entity name is reserved as available:

MBros, LLC

This name reservation is for the exclusive use of Robert Meeks, 10790 COUNTY ROAD 1, Fairhope, AL 36532 for a period of one year beginning February 05, 2026 and expiring February 05, 2027

In Testimony Whereof, I have hereunto set my hand and affixed the Great Seal of the State, at the Capitol, in the city of Montgomery, on this day.

February 05, 2026

Date

RES269071

Wes Allen **Secretary of State**

CITY of MOBILE ALCOHOLIC BEVERAGE LICENSE APPLICATION

MOBILE ALABAMA

LEASE PROPERTY OWNERSHIP & SIGN AGREEMENT

This is to certify that I am the property owner, or that I have legal control of the property described herein located inside the City of Mobile and State of Alabama.

LEGAL DESCRIPTION OF PROPERTY

REQUIRED - contact the Map & Plat Room located at Mobile County Revenue 251.574.8535) or this should be included on your deed and/or lease paperwork

Ownership Type | Company Name

The above described property is ☐ Owned ☒ Leased to/by MBros. LLC dba The People's Room of Mobile

Who has applied for an *ALABAMA ALCOHOLIC BEVERAGE LICENSE* at the above described location.

I hereby agree to allow the applicant to post a NOTICE sign at the location notifying the general public than an application for sale of alcohol is being considered for this location.

The applicant agrees that the NOTICE sign will be posted and will NOT be removed/discarded and will be required to remain posted until this application is approved by the City of Mobile City Council.

Sworn to and subscribed before me this 23rd day of June 20 26

Notary Printed Name	Notary Signature	My (Notary) Commission Expires
Marcus Jordan	[signature]	9/29/2026

Notary Stamp

MARCUS JORDAN
MY COMMISSION EXPIRES
NOTARY
PUBLIC
SEPTEMBER 29 2026
ALABAMA STATE AT LARGE

Owner of Property (Print Name)	Applicant Name (Print Name)
Leon F. Raue	Robert Meeks
Owner of Property (Signature)	Applicant Name (Signature)
[signature]	[signature]
Street Address	Street Address
P.O. Box 441	78 St Francis St
City, State, Zip	City, State, Zip
Esparto, Ca 95627	Mobile, AL 36602
Date Agreement Signed	Date Agreement Signed

Revision Date 10 23 2023

CITY of MOBILE ALCOHOLIC BEVERAGE LICENSE APPLICATION

PLANNING & ZONING DEPARTMENT APPROVAL

Request for zoning permission to process an alcoholic beverage application, subject to approval by the City of Mobile City Council and Issuance of the Zoning Approval Certificate

Business Structure
- ☐ Sole Proprietorship
- ☑ Limited Liability Company (LLC)
- ☐ Corporation

Application Type
- ☐ New Business
- ☑ New Owner
- ☐ Location Change

Transfer License?
- ☐ No
- ☑ Yes

Relocation Date

Description/Type
- ☐ Convenience/Grocery Store
- ☐ Hotel ☑ Lounge/Bar
- ☐ Package Store ☐ Restaurant
- ☐ Other

License Type Applied for with AL ABC Board (MUST match with ABC Board) - check ALL that apply

☐ 010 - Lounge Retail Liquor (Class I) ☐ 011 - Lounge Retail Liquor (Class II) ☐ Package Store ☐ 020 - Restaurant Retail Liquor
☑ 040 - Retail Beer (On/Off Premises) ☐ 050 - Retail Beer (Off Premises Only) ☑ 060 Retail Table Wine (On/Off Premises)
☐ 070 - Retail Wine (Off Premises Only) ☐ 090 - Wholesale - Beer ☐ 100 - Wholesale - Wine ☐ 110 - Wholesale - Beer & Wine
☐ 140 - Special Events Retail ☐ 160 - Special Events - More than 30 Days ☐ 200 Manufacturer ☐ 220 BrewPub

Legal Business Name	Trade Name (DBA)
MBRos LLC	The Peoples Room of Mobile

Company Physical Address (Street Address, Suite #)	City	State	Zip Code
78 Saint Francis St	Mobile	AL	36602

Business Contact Person Information

Name	Title	Phone	Email
Jay Meeks	member		

URBAN DEVELOPMENT DEPARTMENT USE ONLY

Building Sq Footage	Parking Provided	Parking Required	Compliance	Zoning	Approved
approx. 1,000 sf	n/a	n/a	*yes	T-6	yes

Comments

* This site is located within the Downtown Development District and is therefore exempt from parking requirements.

Print Name	Signature	Date
Samara Walley	Samara Walley	6/30/26

The People's Room of Mobile
78 St. Francis st. Mobile, AL 36602

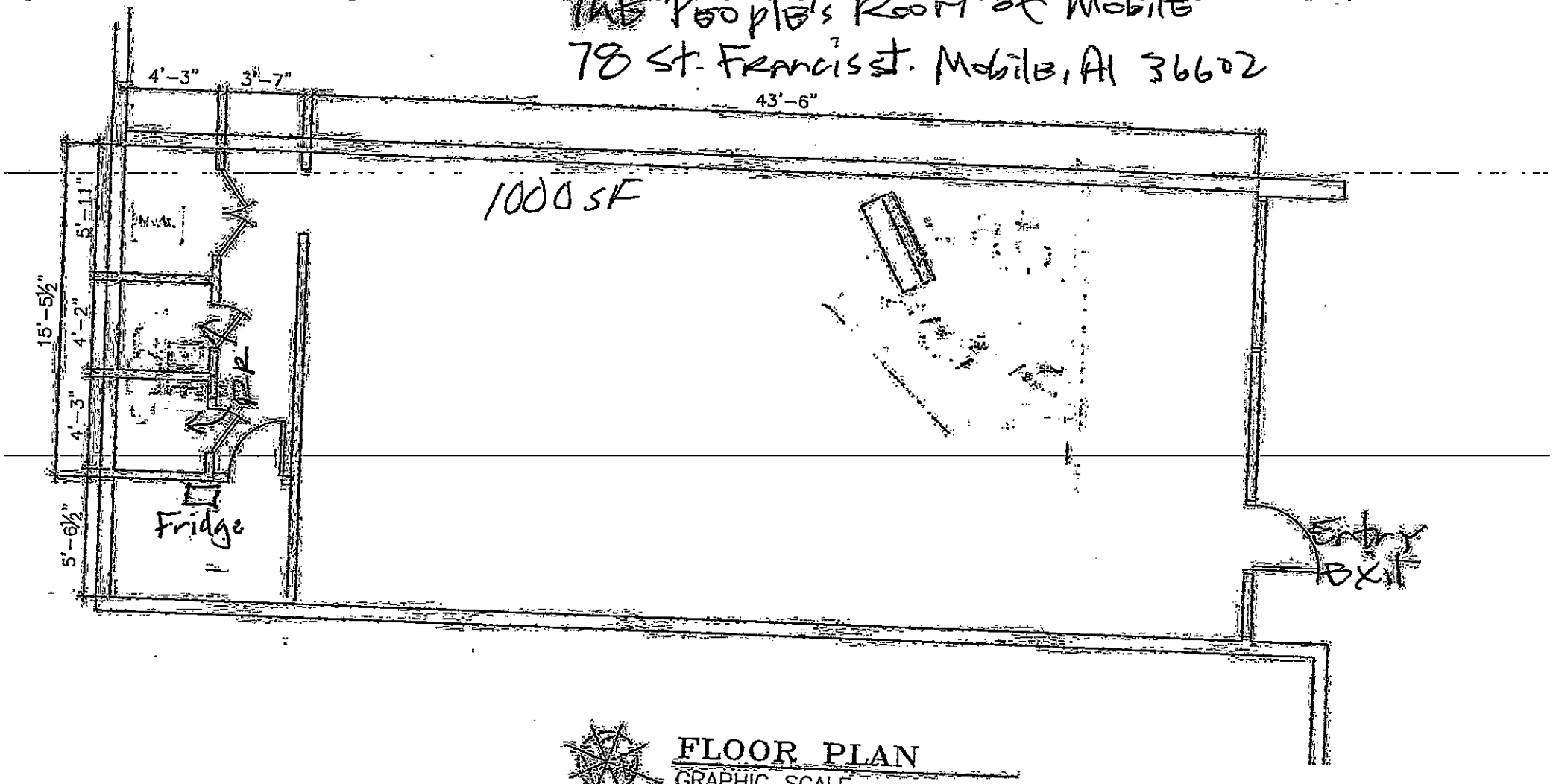

FLOOR PLAN
GRAPHIC SCALE
0 1 2 3 4 5 10 15 20

Robert Nooks
Jay Nooks

05.19 2026

CITY OF MOBILE

REVENUE DEPARTMENT

June 30, 2026

THE PEOPLES ROOM OF MOBILE

78 ST FRANCIS STREET

MOBILE, AL 36602 USA

ACCOUNT NUMBER: 133977 TERRITORY 2

INVOICE

BILL #	MTH/YR	DESCRIPTION	AMOUNT BILLED	PENALTY DUE	INTEREST DUE	AMOUNT PAID
2344200	12/2026	ALCOHOL APPLICATION FEE (LIQUOR & CONSUMABLE HEMP) APPLICATION FEE	$50.00	$0.0	$0.00	$0.00

TOTAL AMOUNT DUE WITHIN 10 DAYS OF INVOICE DATE:

$50.00*

***Additional penalties may apply when payment is rendered**

To avoid further collection efforts, or the assessment of additional interest and penalties, complete your payment online at:

https://cityofmobileal.tylerportico.com/css/citizen-selfservice-bl/business-license/home

or mail your payment to:

CITY OF MOBILE REVENUE DEPARTMENT

PO BOX 3065

MOBILE, AL 36652-3065

[redacted]

R E S O L U T I O N

Sponsored by: Councilmember Josh Woods, District 6

BE IT RESOLVED BY THE CITY COUNCIL OF MOBILE, ALABAMA, that the following application to the Alabama Alcoholic Beverage Control Board of the State of Alabama, is hereby recommended for grant of such license by said Board.

Type of application:	Special Events Retail Liquor License
Submitted by:	Royal Daqs, LLC
Location:	Inflatable Night Grown Up Addition 1711 Hillcrest Road Mobile, AL 36695

Adopted:

_____

City Clerk

OFFICE OF THE CITY COUNCIL

COUNCIL MEMBERS
C.J. SMALL
PRESIDENT - DISTRICT 3
GINA GREGORY
VICE PRESIDENT - DISTRICT 7
CORY PENN
DISTRICT 1
SAMANTHA INGRAM
DISTRICT 2
BEN REYNOLDS
DISTRICT 4
BEAU FLEMING
DISTRICT 5
JOSH WOODS
DISTRICT 6

CITY CLERK
LISA C. LAMBERT

Application Date	Application Type	Application Number	License Account #	Council District	Council Agenda Date
06/26/2026	NEW APPLICATION	2026 - 5803	134697	4	July 7, 2026

NOTE: If this letter is altered, or changed in any way, it will not be accepted by the Alabama Alcoholic Beverage Control Board

Alabama Alcoholic Beverage Control Board
PO Box 1151 Montgomery AL 36101

Gentleman,

The City Council of the City of Mobile does hereby consent to the applicant referenced below, which is located within the City's corporate limits, to the issuance of:

License Type(s)
140 - SPECIAL EVENTS RETAIL

Legal Business Name
ROYAL DAQS LLC

Trade Name (DBA)
INFLATALBE NIGHT GROWN UP ADDITION

Location Address
1711 HILLCREST RD

City, State, Zip Code
MOBILE AL 36695

Comments

Yours Very Truly,

Mobile City Council President

Applicant/POA Signature

Date

OFFICE OF THE CITY COUNCIL

COUNCIL MEMBERS
C.J. SMALL
PRESIDENT - DISTRICT 3
GINA GREGORY
VICE PRESIDENT - DISTRICT 7
CORY PENN
DISTRICT 1
SAMANTHA INGRAM
DISTRICT 2
BEN REYNOLDS
DISTRICT 4
BEAU FLEMING
DISTRICT 5
JOSH WOODS
DISTRICT 6

CITY CLERK
LISA C. LAMBERT

Application Date	Application Type	Application Number	License Account #	Council District	Council Agenda Date
06/26/2026	NEW APPLICATION	2026 - 5803	134697	4	July 7, 2026

NOTE: If this letter is altered, or changed in any way, it will not be accepted by the Alabama Alcoholic Beverage Control Board

Alabama Alcoholic Beverage Control Board
PO Box 1151 Montgomery AL 36101

Gentleman,

The City Council of the City of Mobile does hereby consent to the applicant referenced below, which is located within the City's corporate limits, to the issuance of:

License Type(s)
140 - SPECIAL EVENTS RETAIL

Legal Business Name
ROYAL DAQS LLC

Trade Name (DBA)
INFLATALBE NIGHT GROWN UP ADDITION

Location Address
1711 HILLCREST RD

City, State, Zip Code
MOBILE AL 36695

Comments

Yours Very Truly,

Mobile City Council President

Applicant/POA Signature

Date

City of Mobile ABC Licensing & Compliance Application

Application Date	Application Type	Application Number	License Account #	Council District	Council Agenda Date
06/26/2026	NEW APPLICATION	2026 - 5803	134697	4	July 7, 2026

License Type Applied for with Alabama ABC Board	2nd License Type Applied for with Alabama ABC Board
140 - SPECIAL EVENTS RETAIL	

Business Information

Legal Business Name	Trade Name (DBA)
ROYAL DAQS LLC	INFLATALBE NIGHT GROWN UP ADDITION

Business Structure Type	Incorporation Date	SOS Entity ID	State	County
LLC - LIMITED LIABILITY COMPANY	05/01/2026	001-251-0947	AL	MOBILE

Federal Tax ID (FEIN)	Alabama State Sales Tax ID	Business Phone Number	If Hemp, Product Type
42-2294412	R012919772	[redacted]	

Physical Address (Street Address, Suite #)	City	State	Zip Code
1711 HILLCREST RD	MOBILE	AL	36695

Mailing Address (Street Address, Suite #, PO Box)	City	State	Zip Code
[redacted]			

Primary Business Activity at the Location Explain (other)	If Location Transfer, Previous Street Address and Zip Code
LOUNGE/BAR	N/A

Contact Person Information

Name	Title	POA	Phone	Email
KATABRA DIXON	OWNER			

If Transfer of ABC License, Previous Licensee Information

Legal Business Name	Trade Name (DBA)
N/A	

ABC License Type	License Number	Any ABC Pending Actions

Land/Building Information

Do you (the applicant) own or lease the property?

Property Owner Name and/or Contact Person Name	Property Owner Phone Number	Property Owner Email
KATABRA DIXON		

Property Ow	City	State	Zip Code

Bldg Square Footage	Bldg Seating Capacity	Restroom Facilities	Patio Area	Structure Type	License Covers
99,999	150	YES	NO	SINGLE STRUCTURE	ENTIRE STRUCTURE

Do the premises have a fully equipped/operational kitchen?	NO
Is the business used to habitually and principally provide food to the public?	NO
Is the business equipped with services and facilities for on premises consumption?	YES
Will the business be operated primarily as a package store?	NO

Applicant/POA Initials KD

City of Mobile ABC Licensing & Compliance Application

Owner(s), Partner(s) or Officer(s) Information — **Copy of Driver's License Must Be Provided for each Person**

Full Name (Last, First, Middle)	Title	Driver's License (State, Number)	
KATABRA DIXON	OWNER		
Home Address (Street Address, Apt/Unit #)	**City**	**State**	**Zip Code**
Date of Birth	**Place of Birth (City, State, Nation)**	**Social Security Number**	**Mobile/Phone Number**

Have you been charged (whether convicted or not) with any law violation(s) in the last ten (10) years?

	If Yes, Law Violation	Arresting Agency	Arrest Date	Disposition
NO				

Do you have any existing State of Alabama ABC license(s) with any entity in your name?

	If Yes, Legal Business Name	Business DBA	Physical Location Address (Street, City, Zip Code)
NO			

Full Name (Last, First, Middle)	Title	Driver's License (State, Number)	
Home Address (Street Address, Apt/Unit #)	**City**	**State**	**Zip Code**
Date of Birth	**Place of Birth (City, State, Nation)**	**Social Security Number**	**Mobile/Phone Number**

Have you been charged (whether convicted or not) with any law violation(s) in the last ten (10) years?

	If Yes, Law Violation	Arresting Agency	Arrest Date	Disposition

	If Yes, Legal Business Name	Business DBA	Physical Location Address (Street, City, Zip Code)

Power of Attorney (POA) Information — **Copy of Driver's License Must Be Provided for each Person**

Full Name (Last, First, Middle)	Title	Date of Birth	Driver's License (State, Number)	
N/A				
Home Address (Street Address, Apt/Unit #)	**City**	**State**	**Zip Code**	**Phone Number**

Has anyone, including manager or applicant, had a City of Mobile, Federal/State license suspended, revoked or declined? NO

Has a liquor, wine, malt or brewed beverage license for these premises ever been denied, suspended, surrendered or revoked? NO

Are the applicants named in this application, the only person(s), in any manner, interested in the business sought to be licensed? YES

Applicant/POA Initials KD

City of Mobile ABC Licensing & Compliance Application

CERTIFICATION and SIGNATURE

KD The undersigned agree, if a license is used as herein applied for, to comply at all times with and to fully observe all the provisions of the Alabama Alcoholic Beverage Control Act, as appears in the Code of Alabama, Title 28, and all laws of the State of Alabama and the Codes/Ordinances of the City of Mobile relative to the handling of alcoholic beverages.

KD The undersigned agree, if a license is used as herein requested, further agrees to obey all rules and regulations promulgated by the Board and the Code/Ordinances of the City of Mobile relative to all alcoholic beverages received in this State. The undersigned, if issued a license as herein requested, also agrees to allow and hereby invites duly authorized agents of the Alabama Alcoholic Beverage Control Board and any duly commissioned law enforcement officers of the State, County or Municipality in which the licensed premises are located to enter and search with a warrant the licensed premises or any building owned or occupied by him/her in connection with, adjoining, or adjacent thereto, whether connected or not, and whether used by him/her as his/her private dwelling.

KD The undersigned understands that should he or she violate any of the provisions of the Code of Alabama, Title 28, or any of the rules and regulations of the Alcoholic Beverage Control Board, his/her license shall be subject to revocation.

KD The undersigned understands that the City of Mobile reserves the right to file for suspension, revocation or an objection with the Alabama Alcoholic Beverage Control Board to a license renewal for failure to follow the Alcoholic Beverage Control Laws of the State of Alabama and the Codes/Ordinances of the City of Mobile or the creation of a nuisance. The undersigned further understands and agrees that no changes in the manner of operation, nature of owner and no deletion or discontinuance of any services or facilities as described in this application will be allowed with prior written approval of the City of Mobile and the Alabama Alcoholic Beverage Control Board.

KD Applicant for the Alcoholic Beverage license, requested by the forgoing applicant hereby swears or affirms that he/she has read said application and all the statements and facts set forth therein or in supporting documents are true and correct, and that, except as otherwise indicated therein, the applicant is the only person interested in the business for which license is requested.

KD In reference to ACT No. 80-529, I understand that if my application is denied or discontinued, I will not be refunded the filing fee required by this application.

KD Applicant understands that approval from the State of Alabama Alcoholic Beverage Control Board and the City of Mobile is owner and location specific. If the owner(s) named in the application and/or approval change and/or business is relocated to another location from what was applied for, then they must contact the Alabama Alcoholic Beverage Control Board and the City of Mobile for a new approval.

Owner/Applicant/POA Printed Name	Date of Application Signature
Katabra Dixon	7/1/2026
Owner/Applicant/POA Signature	Title of Person Signing this Application
Kat Dix	owner

Sworn to and subscribed before me this 30th day of June 20 26

Notary Person Printed Name	Notary Person Signature	My Notary Commission Expires
Tara Lynn Harris		February 11, 2030

City of Mobile ABC Licensing & Compliance Application

TO: City of Mobile City Council

FROM: City of Mobile Revenue Department

RE: Alcoholic Beverage License Request

Application Date	Application Type	Application Number	License Account #	Council District	Council Agenda Date
06/26/2026	NEW APPLICATION	2026 - 5803	134697	4	July 7, 2026

The applicant referenced below has filed an application and provided the required documentation with the City of Mobile Revenue Department for an alcoholic beverage and/or consumable hemp product(s) license and is applying to the City of Mobile requesting City Council approval for a state ABC license for sales of alcoholic beverages within the city limits at the physical location address below.

License Type(s)

140 - SPECIAL EVENTS RETAIL

Legal Business Name

ROYAL DAQS LLC

Trade Name (DBA)

INFLATALBE NIGHT GROWN UP ADDITION

Location Address

1711 HILLCREST RD

City, State, Zip Code

MOBILE AL 36695

Contact Person Information				
Name	Title	POA	Phone	Email
KATABRA DIXON	OWNER			

Has any outstanding license and tax issues been addressed and corrected with this business? YES

What is/was the start date of this business? 07/30/2026

The alcohol license will not be issued until two (2) letters of approval, signed by City Council, and a copy of the resolution passed by the City Council are received by the City of Mobile Revenue Department.

Tara Lynn Harris

Revenue Department Representative

City of Mobile Alcoholic Beverage License Application
Notice of Public Hearing

Section 30-79 is hereby added to of the Mobile City Code, 1991, as follows:

Section 30-79 - Notice of Public Hearing for Alcoholic Beverage License

a) In every case where application is made for any type of alcohol beverage license, in addition to other adverting requirements that may be required by law, notice of said application shall be published on a website approved for such notice by the City's Department of Revenue. Such notice shall read substantially as follows:

ROYAL DAQS LLC

dba INFLATALBE NIGHT GROWN UP ADDITION

has made application to the City Council of the City of Mobile for a

140 - SPECIAL EVENTS RETAIL and

for the premises located at

1711 HILLCREST RD , Mobile, Alabama.

A public hearing will be held by the City Council in the Council's chambers at the Government Plaza Auditorium located at 205 Government Street at 1030am on July 7, 2026 for application number 2026 - 5803

b) In addition to the published notice required, the applicant shall post on the premises where the business or sale is to be conducted, continuously for a period of not less than SEVEN (7) days prior to the consideration of the application by the City Council, a posted notice of the pending application and public hearing concerning the granting thereof in the manner and form to be supplied by the City of Mobile Revenue Department, at the time applicant is first made to the City for such license. Such notice shall be conspicuously displayed on the front of the building so as to be clearly visible from the street or sidewalk adjacent thereto. The published notice shall be published for THREE (3) consecutive days.

c) Applicant shall take such steps as may be necessary to meet all requirements of ordinances, regulations, and statutes applicable thereto. When the application for a license is made and all requirements have been met, a day for the hearing shall be set, the day shall be supplied to the applicant to be inserted in the newspaper ad and in the posted notice.

Applicant/POA Signature

Tara Lynn Harris

Revenue Department Representative

PUBLIC NOTICE!

An application has been submitted to the Mobile City Council for an ABC Compliance License. This license would authorize the sale of alcoholic beverages and/or consumable hemp products at the location listed below.

License Type(s)

140 - SPECIAL EVENTS RETAIL

Legal Business Name

ROYAL DAQS LLC

Trade Name (DBA)

INFLATALBE NIGHT GROWN UP ADDITION

Location Address

1711 HILLCREST RD

Zip Code

36695

Application Number

2026 - 5803

Notice Post Date @ Location

06/26/2026

That public hearing on said application has been set before the City Council in the Government Plaza Auditorium (1st floor) located at 205 Government Street @ 1030am on Tuesday

July 7, 2026

Date

Anyone desiring to be heard either for or against said application may appear in person at said time or may indicate his or her wishes in writing by communication to the City of Mobile City Clerk Office

Applicant/POA Signature

Tara Lynn Harris

Revenue Department Representative

In accordance to the City of Mobile codes/ordinances, the applicant shall post on the premises where the business is to be conducted, continuously for a period of not less than seven (7) days prior to the consideration of the application by the governing body. Said notice shall be conspicuously displayed on the front of the building so as to be clearly visible from the street or sidewalk adjacent thereto.

STATE OF ALABAMA
ALCOHOLIC BEVERAGE CONTROL BOARD
ALCOHOL LICENSE APPLICATION
Confirmation Number: 20260624140130850

Type License: 140 - SPECIAL EVENTS RETAIL **State:** $150.00 **County:** $150.00

Trade Name: INFLATALBE NIGHT GROWN UP ADDITION **Filing Fee:** $50.00

Applicant: ROYAL DAQS LLC **Transfer Fee:**

Location Address: 1711 HILLCREST RD MOBILE , AL 36695

Mailing Address: 7272 THEODORE DAWES RD STE C1046 THEODORE, AL 36582

County: MOBILE **Tobacco sales:** NO **Tobacco Vending Machines:**

Product Type: **Type Ownership:** LLC

Book, Page, or Document info: 001-251-0947

Do you sell Draft Beer?: N/A

Date Incorporated: 05/01/2026 **State incorporated:** AL **County Incorporated:** MOBILE

Date of Authority: 05/01/1926

Federal Tax ID: 42-2294412 **Alabama State Sales Tax ID:** R012919772

Name:	Title:	Date and Place of Birth:	Residence Address:
KATABRA DENISE DIXON	MEMBER		2661 REAVES ST

Has applicant complied with financial responsibility ABC RR 20-X-5-.14? YES

Does ABC have any actions pending against the current licensee? NO

Has anyone, including manager or applicant, had a Federal/State permit or license suspended or revoked? NO

Has a liquor, wine, malt or brewed license for these premises ever been denied, suspended, or revoked? NO

Are the applicant(s) named above, the only person(s), in any manner interested in the business sought to be licensed? YES

STATE OF ALABAMA
ALCOHOLIC BEVERAGE CONTROL BOARD
ALCOHOL LICENSE APPLICATION
Confirmation Number: 20260624140130850

Are any of the applicants, whether individual, member of a partnership or association, or officers and directors of a corporation itself, in any manner monetarily interested, either directly or indirectly, in the profits of any other class of business regulated under authority of this act? NO

Does applicant own or control, directly or indirectly, hold lien against any real or personal property which is rented, leased or used in the conduct of business by the holder of any vinous, malt or brewed beverage, or distilled liquors permit or license issued under authority of this act? NO

Is applicant receiving, either directly or indirectly, any loan, credit, money, or the equivalent thereof from or through a subsidiary or affiliate or other licensee, or from any firm, association or corporation operating under or regulated by the authority of this act? NO

Contact Person: KATABRA DIXON
Business Phone: 251-725-7102
Fax:

Home
Cell P'
E-mai

PREVIOUS LICENSE INFORMATION:
Trade Name:
Applicant:

Previous Vendor Number:

STATE OF ALABAMA
ALCOHOLIC BEVERAGE CONTROL BOARD
ALCOHOL LICENSE APPLICATION
Confirmation Number: 20260624140130850

If applicant is leasing the property, is a copy of the lease agreement attached? YES

Name of Property owner/lessor and phone number: CITY OF MOBILE 251-208-1552

What is lessors primary business? CITY GOVERNMENT

Is lessor involved in any way with the alcoholic beverage business? NO

Is there any further interest, or connection with, the licensee's business by the lessor? NO

Does the premise have a fully equipped kitchen? NO

Is the business used to habitually and principally provide food to the public? NO

Does the establishment have restroom facilities? YES

Is the premise equipped with services and facilities for on premises consumption of alcoholic beverages? YES

Will the business be operated primarily as a package store? NO

Building Dimensions Square Footage: 99999

Display Square Footage:

Building seating capacity: 150

Does Licensed premises include a patio area? NO

License Structure: SINGLE STRUCTURE

License covers: ENTIRE STRUCTURE

Number of licenses in the vicinity:

Nearest:

Nearest school:

Nearest church:

Nearest residence:

Location is within: CITY/TOWN LIMITS

Police protection: CITY

STATE OF ALABAMA
ALCOHOLIC BEVERAGE CONTROL BOARD
ALCOHOL LICENSE APPLICATION
Confirmation Number: 20260624140130850

Has any person(s) with any interest, including manager, whether as sole applicant, officer, member, or partner been charged (whether convicted or not) of any law violation(s)?

Name:	Violation & Date:	Arresting Agency:	Disposition:

STATE OF ALABAMA
ALCOHOLIC BEVERAGE CONTROL BOARD
ALCOHOL LICENSE APPLICATION
Confirmation Number: 20260624140130850

Initial each — **Signature page**

Initial each	
KD	In reference to law violations, I attest to the truthfulness of the responses given within the application.
KD	In reference to the Lease/property ownership, I attest to the truthfulness of the responses given within the application.
KD	In reference to ACT No. 80-529, I understand that if my application is denied or discontinued, I will not be refunded the filing fee required by this application.
KD	In reference to Special Retail or Special Events retail license, Wine Festival and Wine Festival Participant Licenses, and Food or Beverage Truck Licenses, I agree to comply with all applicable laws and regulations concerning this class of license, and to observe the special terms and conditions as indicated within the application.
X	In reference to the Club Application information, I attest to the truthfulness of the responses given within the application.
X	In reference to the transfer of license/location, I attest to the truthfulness of the information listed on the attached transfer agreement.
KD	In accordance with Alabama Rules & Regulations 20-X-5-.01(4), any social security number disclosed under this regulation shall be used for the purpose of investigation or verification by the ABC Board and shall not be a matter of public record.
KD	The undersigned agree, if a license is issued as herein applied for, to comply at all times with and to fully observe all the provisions of the Alabama Alcoholic Beverage Control Act, as appears in Code of Alabama, Title 28, and all laws of the State of Alabama relative to the handling of alcoholic beverages. The undersigned, if issued a license as herein requested, further agrees to obey all rules and regulations promulgated by the board relative to all alcoholic beverages received in this State. The undersigned, if issued a license as herein requested, also agrees to allow and hereby invites duly authorized agents of the Alabama Alcoholic Beverage Control Board and any duly commissioned law enforcement officer of the State, County or Municipality in which the license premises are located to enter and search without a warrant the licensed premises or any building owned or occupied by him or her in connection with said licensed premises. The undersigned hereby understands that he or she violate any provisions of the aforementioned laws his or her license shall be subject to revocation and no license can be again issued to said licensee for a period of one year. The undersigned further understands and agrees that no changes in the manner of operation and no deletion or discontinuance of any services or facilities as described in this application will be allowed without written approval of the proper governing body and the Alabama Alcoholic Beverage Control Board.
KD	I hereby swear and affirm that I have read the application and all statements therein and facts set forth are true and correct, and that the applicant is the only person interested in the business for which the license is required.

Applicant Name (print): Katabra Dixon

Signature of Applicant: Katabra Dixon

Notary Name (print): Sandy Durham

Notary Signature: Sandy Durham

Commission expires: 9/26/2029

Application Taken: **App. Inv. Completed:** **Forwarded to District Office:**
Submitted to Local Government: **Received from Local Government:**
Received in District Office: **Reviewed by Supervisor:** **Forwarded to Central Office:**

STATE OF ALABAMA
ALCOHOLIC BEVERAGE CONTROL BOARD
ALCOHOL LICENSE APPLICATION

Confirmation Number: 20260624140130850

Private Clubs / Special Retail / or Special Events licenses ONLY

Private Club

Does the club charge and collect dues from elected members? N/A
Number of paid up members:
Are meetings regularly held? N/A
How often?
Is business conducted through officers regularly elected? N/A
Are members admitted by written application, investigation, and ballot? N/A
Has Agent verified membership applications for each member listed? N/A
Has at least 10% of members listed been confirmed and highlighted? N/A Agent's Initials:
For what purpose is the club organized?
Does the property used, as well as the advantages, belong to all the members? N/A
Do the operations of the club benefit any individual member(s), officer(s), director(s), agent(s), or employee(s) of the club rather than to benefit of the entire membership? N/A

Special Retail

Is it for 30 days or less? N/A
More than 30 days? N/A

Franchisee or Concessionaire of above? N/A
Other valid responsible organization: N/A
Explanation:

Special Events / Special Retail (7 days or less)

Starting Date: 08/01/2026 Ending Date: 08/01/2026
Special terms and conditions for special event/special retail:
EVENT WILL TAKE PLACE AT MEDAL OF HONOR PARK ON AUGUST 1. ENTRANCE/EXITS WILL BE CONTROLLED. NO ALCOHOL IS TO LEAVE THE LICENSE PREMISE. THIS IS A NON-RENEWABLE LICENSE.

Other Explanations

Are there any special restrictions, instructions, and/or conditions for this license?: EVENT WILL TAKE PLACE AT MEDAL OF HONOR PARK ON AUGUST 1. ENTRANCE/EXITS WILL BE CONTROLLED. NO ALCOHOL IS TO LEAVE THE LICENSE PREMISE. THIS IS A NON-RENEWABLE LICENSE.

Form **W-9**
(Rev. March 2024)
Department of the Treasury
Internal Revenue Service

Request for Taxpayer Identification Number and Certification

Go to *www.irs.gov/FormW9* for instructions and the latest information.

Give form to the requester. Do not send to the IRS.

Before you begin. For guidance related to the purpose of Form W-9, see *Purpose of Form*, below.

Print or type. See *Specific Instructions* on page 3.

1 Name of entity/individual. An entry is required. (For a sole proprietor or disregarded entity, enter the owner's name on line 1, and enter the business/disregarded entity's name on line 2.)
Royal Daqs LLC

2 Business name/disregarded entity name, if different from above.
Inflatable Night Grown Up Addition

3a Check the appropriate box for federal tax classification of the entity/individual whose name is entered on line 1. Check only one of the following seven boxes.

☐ Individual/sole proprietor ☐ C corporation ☐ S corporation ☐ Partnership ☐ Trust/estate

☒ LLC. Enter the tax classification (C = C corporation, S = S corporation, P = Partnership) . . . . .

Note: Check the "LLC" box above and, in the entry space, enter the appropriate code (C, S, or P) for the tax classification of the LLC, unless it is a disregarded entity. A disregarded entity should instead check the appropriate box for the tax classification of its owner.

☐ Other (see instructions)

4 Exemptions (codes apply only to certain entities, not individuals; see instructions on page 3):

Exempt payee code (if any)

Exemption from Foreign Account Tax Compliance Act (FATCA) reporting code (if any)

(Applies to accounts maintained outside the United States.)

3b If on line 3a you checked "Partnership" or "Trust/estate," or checked "LLC" and entered "P" as its tax classification, and you are providing this form to a partnership, trust, or estate in which you have an ownership interest, check this box if you have any foreign partners, owners, or beneficiaries. See instructions . . . . . ☐

5 Address (number, street, and apt. or suite no.). See instructions.
1711 Hillcrest Rd

Requester's name and address (optional)

6 City, state, and ZIP code
Mobile Al 36695

7 List account number(s) here (optional)

Part I Taxpayer Identification Number (TIN)

Enter your TIN in the appropriate box. The TIN provided must match the name given on line 1 to avoid backup withholding. For individuals, this is generally your social security number (SSN). However, for a resident alien, sole proprietor, or disregarded entity, see the instructions for Part I, later. For other entities, it is your employer identification number (EIN). If you do not have a number, see *How to get a TIN*, later.

Note: If the account is in more than one name, see the instructions for line 1. See also *What Name and Number To Give the Requester* for guidelines on whose number to enter.

Social security number

			-			-				

or

Employer identification number

4	2	-	2	2	9	4	4	1	2

2

Part II Certification

Under penalties of perjury, I certify that:

1. The number shown on this form is my correct taxpayer identification number (or I am waiting for a number to be issued to me); and
2. I am not subject to backup withholding because (a) I am exempt from backup withholding, or (b) I have not been notified by the Internal Revenue Service (IRS) that I am subject to backup withholding as a result of a failure to report all interest or dividends, or (c) the IRS has notified me that I am no longer subject to backup withholding; and
3. I am a U.S. citizen or other U.S. person (defined below); and
4. The FATCA code(s) entered on this form (if any) indicating that I am exempt from FATCA reporting is correct.

Certification instructions. You must cross out item 2 above if you have been notified by the IRS that you are currently subject to backup withholding because you have failed to report all interest and dividends on your tax return. For real estate transactions, item 2 does not apply. For mortgage interest paid, acquisition or abandonment of secured property, cancellation of debt, contributions to an individual retirement arrangement (IRA), and, generally, payments other than interest and dividends, you are not required to sign the certification, but you must provide your correct TIN. See the instructions for Part II, later.

Sign Here | **Signature of U.S. person** | **Date**

General Instructions

Section references are to the Internal Revenue Code unless otherwise noted.

Future developments. For the latest information about developments related to Form W-9 and its instructions, such as legislation enacted after they were published, go to *www.irs.gov/FormW9*.

What's New

Line 3a has been modified to clarify how a disregarded entity completes this line. An LLC that is a disregarded entity should check the appropriate box for the tax classification of its owner. Otherwise, it should check the "LLC" box and enter its appropriate tax classification.

New line 3b has been added to this form. A flow-through entity is required to complete this line to indicate that it has direct or indirect foreign partners, owners, or beneficiaries when it provides the Form W-9 to another flow-through entity in which it has an ownership interest. This change is intended to provide a flow-through entity with information regarding the status of its indirect foreign partners, owners, or beneficiaries, so that it can satisfy any applicable reporting requirements. For example, a partnership that has any indirect foreign partners may be required to complete Schedules K-2 and K-3. See the Partnership Instructions for Schedules K-2 and K-3 (Form 1065).

Purpose of Form

An individual or entity (Form W-9 requester) who is required to file an information return with the IRS is giving you this form because they

STATE OF ALABAMA

DOMESTIC LIMITED LIABILITY COMPANY (LLC)
CERTIFICATE OF FORMATION

PURPOSE: In order to form a Limited Liability Company (LLC) under Section 10A-5A-2.01 of the *Code of Alabama 1975*, this Certificate of Formation and the appropriate filing fees must be filed with the Office of the Secretary of State. **The information required in this form is required by Title 10A.**

1. The name of the limited liability company (must contain the words "Limited Liability Company" or the abbreviation "L.L.C." or "LLC," and comply with *Code of Alabama*, Section 10A-1-5.06. You may use Professional or Series before Limited Liability Company or LLC (or PLLC or SLLC) if they apply:

   Royal Daqs LLC

2. **A copy of the Name Reservation Certificate from the Office of the Secretary of State must be attached.**

3. The name of the registered agent (only one agent): Katabra Dixon

   Street (**no PO Boxes**) address of registered office (must be located in Alabama):

   3891 Symphony Way E Semmes, AL 36575

   *COUNTY of above address: MOBILE

   Mailing address in Alabama of registered office (if different from street address):

4. The undersigned certify that there is at least one member of the limited liability company.

(For SOS Office Use Only)

Alabama
Sec. Of State

001-251-097 DLL

Date	05/01/2026
Time	01:55:00
File	$100.00
County	$100.00
Total	$200.00

DOMESTIC LIMITED LIABILITY COMPANY (LLC) CERTIFICATE OF FORMATION

5. Check **only** if the type applies to the Limited Liability Company being formed:

☐ Series LLC complying with Title 10A, Chapter 5A, Article 11

☐ Professional LLC complying with Title 10A, Chapter 5A, Article 8

☐ Non-Profit LLC complying with Section 10A-5A-1.04(c)

6. The filing of the limited liability company is effective immediately on the date received by the office of the Secretary of State, Business Services Division or at the delayed filing date (cannot be prior to the filing date) specified in this filing complying with Section 10A-1-4.12
The undersigned specify 5 / 1 / 2026 as the effective date (must be on or after the date filed in the office of the Secretary of State, but no later than the 90th day after the date this instrument was signed) and the time of filing to be 01 : 55 ☑ AM or ☐ PM. (cannot be noon or midnight – 12:00)

☐ Attached are any other matters the members determine to include herein (if this item is checked there must be attachments with the filing).

5 / 1 / 2026
Date (MM/DD/YYYY)

Katabra Dixon
Signature as required by 10A-5A-2.04

owner
Typed title (organizer or attorney-in-fact)

*County of Registered Agent is requested in order to determine distribution of County filing fees.

Wes Allen
Secretary of State

P.O. Box 5616
Montgomery, AL 36103-5616

STATE OF ALABAMA

I, Wes Allen, Secretary of State of Alabama, having custody of the Great and Principal Seal of said State, do hereby certify that

pursuant to the provisions of Title 10A, Chapter 1, Article 5, Code of Alabama 1975, and upon an examination of the entity records on file in this office, the following entity name is reserved as available:

Royal Daqs LLC

This name reservation is for the exclusive use of Katabra Dixon, 7272 Theodore Dawes Rd. Ste. C-1046, Theodore, AL 36582 for a period of one year beginning May 01, 2026 and expiring May 01, 2027

In Testimony Whereof, I have hereunto set my hand and affixed the Great Seal of the State, at the Capitol, in the city of Montgomery, on this day.

May 01, 2026

Date

RES288513

Wes Allen **Secretary of State**

2026

SALES TAX LICENSE

State of Alabama

Alabama Department of Revenue

ISSUED TO:

ROYAL DAQS LLC
7272 THEODORE DAWES RD STE C-1046
THEODORE, AL 36582-4135

ACCOUNT TYPE	ACCOUNT NUMBER	EFFECTIVE DATE	EXPIRATION DATE
SLS	R012964952	08/1/2026	12/31/2026

TO ENGAGE IN BUSINESS FOR WHICH TAX IS IMPOSED BY SECTIONS 40-23-1/40 CODE OF ALABAMA 1975, AS AMENDED. SALES TAX LAW

NON-TRANSFERABLE

THIS ACCOUNT ISSUED TO PERSON OR BUSINESS WHOSE NAME APPEARS ABOVE IS NOT TRANSFERABLE. THE LICENSEE MAY PURCHASE ITEMS TAX EXEMPT FOR THE PURPOSE OF RESALE AT RETAIL IN THE REGULAR COURSE OF BUSINESS.

STATE OF ALABAMA
DEPARTMENT OF REVENUE

Jennifer Byrd
Deputy Commissioner

NAICS CODE: 445298

ALABAMA DEPARTMENT OF REVENUE
SALES AND USE TAX
P.O. BOX 327710
MONTGOMERY, AL 36132-7710

RETURN SERVICE REQUESTED

L0839783952

EVENTS

City of Mobile Events Department
48 North Sage Avenue
Mobile, AL 36607

Wednesday, June 24, 2026

ABC Board
Attention: Sandy Durham
5832 Highway 90 West
Theodore, AL 36582

To Whom It May Concern:

The City of Mobile Events Department understands that the Royal Daqs, LLC has applied for a Special Events License with the ABC Board for the Inflatable Night: Grown-Up Edition, occurring on August 1, 2026, from 9:00 am until 10:00 pm at Medal of Honor Park, located at 1711 Hillcrest Rd, Mobile, AL 36695. Please allow this to serve as confirmation from the City of Mobile that this event has been permitted to take place as listed.

Sincerely,

JeNyia Rocker

JeNyia Rocker
Events Manager

[redacted]

CITY OF MOBILE

REVENUE DEPARTMENT

June 30, 2026

SPEC EVNT - ROYAL DAQS LLC

7272 THEODORE DAWES ROAD

UNIT C

THEODORE, AL 36582 USA

ACCOUNT NUMBER: 134697 TERRITORY 4

INVOICE

BILL #	MTH/YR	DESCRIPTION	AMOUNT BILLED	PENALTY DUE	INTEREST DUE	AMOUNT PAID
2344258	12/2026	ALCOHOL APPLICATION FEE (LIQUOR & CONSUMABLE HEMP) APPLICATION FEE	$50.00	$0.0	$0.00	$0.00

TOTAL AMOUNT DUE WITHIN 10 DAYS OF INVOICE DATE:

$50.00*

***Additional penalties may apply when payment is rendered**

To avoid further collection efforts, or the assessment of additional interest and penalties, complete your payment online at:

https://cityofmobileal.tylerportico.com/css/citizen-selfservice-bl/business-license/home

or mail your payment to:

CITY OF MOBILE REVENUE DEPARTMENT

PO BOX 3065

MOBILE, AL 36652-3065

[redacted]

A RESOLUTION FIXING THE COSTS FOR THE DEMOLITION OF THE STRUCTURE AT **1966 HALLS MILL ROAD**

Sponsored by: Councilmember Samantha Ingram, District 2

WHEREAS, notice has been duly given pursuant to Ordinance No. 11-085, adopted November 26, 2002, affording to all persons an opportunity to be heard concerning the ***demolition*** of the structure at **1966 HALLS MILL ROAD** and the City Council of the City of Mobile having held such public hearing in connection therewith;

WHEREAS, an itemized report in writing has been made to the City Council of the City of Mobile showing the costs involved in the ***demolition*** of the structure **1966 HALLS MILL ROAD** to be **$3,400.00** and the City Council, having received the report and heard all objections which have been raised by any of the interested parties liable to be assessed for the cost of the work, finds and determines that such costs are reasonable and in all respects should be confirmed;

NOW, THEREFORE, BE IT RESOLVED BY THE CITY COUNCIL OF THE CITY OF MOBILE, ALABAMA, as follows: **$3,400.00** shall constitute a special assessment against the property at structure **1966 HALLS MILL ROAD** and being that property more particularly described as follows:

PT LOT 114 BLK 2 FULTON HOME DBK 156/427 DESC AS BEG SW COR SABBATH & RUTH STS RUN S ALG RUTH ST 29.8 FT TO HALLS MILL RD TH SW ALG RD 105.6 FT TH N ALG PPTY OF AMERICAN BAKERIES CO 100 FT TO SABBATH ST TH E ALG SAID ST 78 FT TO BEG #SEC 28 T4S R1W #MP29 10 28 3 002

Parcel No.: **29 10 28 3 002 092.XXX**

Owner: **NOBLES ERRICK**
PO BOX 50606
MOBILE AL 36605-0606

and the assessment hereby made and confirmed shall constitute a lien on and against said parcel of land for the amount of the assessment so made, and the report made to this body of the costs for the ***demolition*** of the structure upon said property is hereby in all respects confirmed.

Section 2. It is directed that a certified copy of this resolution shall be filed in the Office of the Judge of Probate of Mobile County, Alabama.

Adopted:

_____
City Clerk

LEGAL NOTICE

As set forth by the Nuisance Abatement Ordinance, notice is hereby given that on **July 7, 2026**, at 10:30 a.m., a hearing will be held by the City Council of the City of Mobile, Alabama, in the Auditorium of Mobile Government Plaza, 205 Government Street, in order to hear any objections which may be made by any persons, firm, or corporation regarding the fixing of costs, of the amount thereof, on the **demolition** of the structure at **1966 Halls Mill Road**, for the proposed amount of **$3,400.00.**

If you have any questions regarding this matter, please contact the City of Mobile ***Municipal Enforcement Department at (251) 208-1538***.

Lisa C. Lambert
City Clerk

CITY CLERK DEPARTMENT
2026 MAY 28 AM 11:05

May 15, 2026

Ms. Lisa Carroll-Lambert
City Clerk
City of Mobile
Mobile, Alabama

Re: NUISANCE ABATEMENT – DEMOLITION OF STRUCTURE

PROJECT NUMBER:
ME-014-25

LOCATION:
1966 Halls Mill Road

Dear Ms. Lambert:

The nuisance abatement structure, located at the above-referenced address, has been demolished and the property owners should be assessed as indicated:

Legal Description: PT LOT 14 BLK 2 FULTON HOME DBK 156/427 DESC AS BEG SW COR SABBATH & RUTH STS RUN S ALG RUTH ST 29.8 FT TO HALLS MILL RD TH SW ALG RD 105.6 FT TH N ALG PPTY OF AMERICAN BAKERIES CO 100 FT TO SABBATH ST TH E ALG SAID ST 78 FT TO BEG #SEC 28 T4S R1W #MP29 10 28 3 002

Parcel Number: 29 10 28 3 002 092.XXX
Amount: ~~**$ 3,200.00**~~ $3,400.00
Assessed: NOBLES ERRICK
PO BOX 50606
MOBILE AL 36605-0606

The legal description and assessment information was furnished by Municipal Enforcement Department.

Sincerely yours,

Gary L. Jackson, Deputy Director
Municipal Enforcement Department

CC: James Roberts, David Daughenbaugh, Council Member Samantha Ingram, Felicia Glover, Miranda Davis, Marcus Dixon

A RESOLUTION FIXING THE COSTS FOR THE DEMOLITION/DEBRIS REMOVAL OF THE STRUCTURE AT **1401 VEGA DRIVE**

Sponsored by: Councilmember Ben Reynolds, District 4

WHEREAS, notice has been duly given pursuant to Ordinance No. 11-085, adopted November 26, 2002, affording to all persons an opportunity to be heard concerning the ***demolition/debris removal*** of the structure at **1401 VEGA DRIVE** and the City Council of the City of Mobile having held such public hearing in connection therewith;

WHEREAS, an itemized report in writing has been made to the City Council of the City of Mobile showing the costs involved in the ***demolition/debris removal*** of the structure **1401 VEGA DRIVE** to be **$4,300.00** and the City Council, having received the report and heard all objections which have been raised by any of the interested parties liable to be assessed for the cost of the work, finds and determines that such costs are reasonable and in all respects should be confirmed;

NOW, THEREFORE, BE IT RESOLVED BY THE CITY COUNCIL OF THE CITY OF MOBILE, ALABAMA, as follows: **$4,300.00** shall constitute a special assessment against the property at structure **1401 VEGA DRIVE** and being that property more particularly described as follows:

LOT 15 BLK E SKYLAND PARK U NIT 2 MBK 6/95 #SEC 11 T5S R2W #MP33 01 11 2 000

Parcel No.: **33 01 11 2 000 205.XXX**

Owner: **BYRD BRET LEE & BARBARA RUTH VANDERHOOF**
1319 CREEKWAY DR
MOBILE AL 36605-3770

and the assessment hereby made and confirmed shall constitute a lien on and against said parcel of land for the amount of the assessment so made, and the report made to this body of the costs for the ***demolition/debris removal*** of the structure upon said property is hereby in all respects confirmed.

Section 2. It is directed that a certified copy of this resolution shall be filed in the Office of the Judge of Probate of Mobile County, Alabama.

Adopted:

_____
City Clerk

LEGAL NOTICE

As set forth by the Nuisance Abatement Ordinance, notice is hereby given that on **July 7, 2026**, at 10:30 a.m., a hearing will be held by the City Council of the City of Mobile, Alabama, in the Auditorium of Mobile Government Plaza, 205 Government Street, in order to hear any objections which may be made by any persons, firm, or corporation regarding the fixing of costs, of the amount thereof, on the **demolition/debris removal** of the structure at **1401 Vega Drive**, for the proposed amount of **$4,300.00.**

If you have any questions regarding this matter, please contact the City of Mobile ***Municipal Enforcement Department at (251) 208-1538***.

Lisa C. Lambert
City Clerk

June 16, 2026

Ms. Lisa Carroll-Lambert
City Clerk
City of Mobile
Mobile, Alabama

Re: NUISANCE ABATEMENT – DEMOLITION

PROJECT NUMBER:	LOCATION:
ME-002-25	**1401 VEGA DRIVE**

Dear Ms. Lambert:

The nuisance abatement structure, located at the above-referenced address, foundation has been demolished/debris has been removed and the property owners should be assessed as indicated:

Legal Description: LOT 15 BLK E SKYLAND PARK U NIT 2 MBK 6/95 #SEC 11 T5S R2W #MP33 01 11 2 000

Parcel Number: **33 01 11 2 000 205.XXX**
Amount: ~~$4,100.00~~ $4,300.00
Assessed: BYRD BRET LEE & BARBARA RUTH VANDERHOOF
1319 CREEKWAY DRIVE
MOBILE AL 36605-3770

The legal description and assessment information was furnished by Municipal Enforcement Department.

Sincerely yours,

Gary U. Jackson, Deputy Director
Municipal Enforcement Department
(251) 208-1540

CC: City Council Member, Ben Reynolds, David Daughenbaugh, James Roberts, file copy

RESOLUTION TO DETERMINE CERTAIN EXPENDITURES
SERVE A PUBLIC PURPOSE AND APPROVE PAYMENT

Sponsored by: Councilmember Cory Penn

WHEREAS, *Councilmember Penn wishes to appropriate* ***$1,000.00*** *to* ***Next Level Moxie****,* from the *District 1 Discretionary Fund (10041020 42080)*; and

WHEREAS, *to* ***Next Level Moxie****,* is an Alabama non-profit corporation which provides a service to the community; and

WHEREAS, the Attorney General of the State of Alabama has opined that the granting of public funds to private groups or corporations is proper if the City Council determines that the same serves a public purpose; and

WHEREAS, the Mobile City Council determines that this appropriation to ***Next Level Moxie****,* will be used to *assist with operational expenses.*

NOW, THEREFORE, BE IT RESOLVED that the Mobile City Council hereby finds and determines that an appropriation *of* ***$1,000.00*** *to* ***Next Level Moxie,*** for the purposes described hereinabove and pursuant to language in the request serves a public purpose and the Council further approves and directs the payment of same.

Adopted:

_____
City Clerk

RESOLUTION TO DETERMINE CERTAIN EXPENDITURES
SERVE A PUBLIC PURPOSE AND APPROVE PAYMENT

Sponsored by: Councilmember Cory Penn

WHEREAS, *Councilmember Penn wishes to appropriate* ***$1,500.00*** *to* ***Opportunity for Entertainers****,* from the *District 1 Discretionary Fund (10041020 42080)*; and

WHEREAS, *to* ***Opportunity for Entertainers****,* is an Alabama non-profit corporation which provides a service to the community; and

WHEREAS, the Attorney General of the State of Alabama has opined that the granting of public funds to private groups or corporations is proper if the City Council determines that the same serves a public purpose; and

WHEREAS, the Mobile City Council determines that this appropriation to ***Opportunity for Entertainers****,* will be used to *assist with the upcoming Mob Music Festival.*

NOW, THEREFORE, BE IT RESOLVED that the Mobile City Council hereby finds and determines that an appropriation *of* ***$1,500.00*** *to* ***Opportunity for Entertainers,*** for the purposes described hereinabove and pursuant to language in the request serves a public purpose and the Council further approves and directs the payment of same.

Adopted:

_____
City Clerk

RESOLUTION TO DETERMINE CERTAIN EXPENDITURES
SERVE A PUBLIC PURPOSE AND APPROVE PAYMENT

Sponsored by: *Councilmember Beau Fleming*

WHEREAS, *Councilmember Fleming wishes to appropriate* ***$2,500.00*** *to* ***Mobile Christian School,*** *from District* ***5*** *Discretionary Funds (10041020 42080)*; and

WHEREAS, ***Mobile Christian School****,* is a public school in Mobile, Alabama, which the Council may support pursuant to Code of Alabama § 16-13-36; and

WHEREAS, the Attorney General of the State of Alabama has opined that the granting of public funds is proper if the City Council determines that the same serves a public purpose; and

WHEREAS, the Mobile City Council determines that this appropriation to ***Mobile Christian School****, will be used to assist with* ***Back-to-School Events*** which will serve a public purpose benefiting the City of Mobile and its citizens.

NOW, THEREFORE, BE IT RESOLVED that the Mobile City Council hereby finds and determines that an *appropriation of* ***$2,500.00*** *to* ***Mobile Christian School*** *for the purposes described hereinabove and pursuant to the language on request* serves a public purpose and the Council further approves and directs the payment of same.

Adopted:

_____
City Clerk

RESOLUTION TO DETERMINE CERTAIN EXPENDITURES
SERVE A PUBLIC PURPOSE AND APPROVE PAYMENT

Sponsored by: Councilmember *Beau Fleming*

WHEREAS, *Councilmember Fleming wishes to appropriate* ***$500.00*** *to* ***Sickle Cell Disease Association of America, Inc.,*** from the *District 5 Discretionary Fund (10041020 42080)*; and

WHEREAS, ***Sickle Cell Disease Association of America, Inc.,*** is an Alabama non-profit corporation which provides a service to the community; and

WHEREAS, the Attorney General of the State of Alabama has opined that the granting of public funds to private groups or corporations is proper if the City Council determines that the same serves a public purpose; and

WHEREAS, the Mobile City Council determines that this appropriation to ***Sickle Cell Disease Association of America, Inc.,*** will be used to *assist with the upcoming 50th year celebration on September 18, 2026.*

NOW, THEREFORE, BE IT RESOLVED that the Mobile City Council hereby finds and determines that an appropriation *of* ***$500.00 Sickle Cell Disease Association of America, Inc.,*** for the purposes described hereinabove and pursuant to language in the request serves a public purpose and the Council further approves and directs the payment of same.

Adopted:

_____
City Clerk

RESOLUTION TO DETERMINE CERTAIN EXPENDITURES
SERVE A PUBLIC PURPOSE AND APPROVE PAYMENT

Sponsored by: *Councilmember Gina Gregory*

WHEREAS, *Councilmember Gregory wishes to appropriate* ***$1,000.00*** *to* ***Forest Hill Elementary School****, from District* ***7*** *Discretionary Funds (10041020 42080)*; and

WHEREAS, ***Forest Hill Elementary School****,* is public school in Mobile, Alabama, which the Council may support pursuant to Code of Alabama § 16-13-36; and

WHEREAS, the Attorney General of the State of Alabama has opined that the granting of public funds is proper if the City Council determines that the same serves a public purpose; and

WHEREAS, the Mobile City Council determines that this appropriation to ***Forest Hill Elementary School****, will be used* ***to assist with Back-to-School****,* which will serve a public purpose benefiting the City of Mobile and its citizens.

NOW, THEREFORE, BE IT RESOLVED that the Mobile City Council hereby finds and determines that an *appropriation of* ***$1,000.00*** *to* ***Forest Hill Elementary School*** *for the purposes described hereinabove and pursuant to the language on request* serves a public purpose and the Council further approves and directs the payment of same.

Adopted:

_____
City Clerk

RESOLUTION TO DETERMINE CERTAIN EXPENDITURES
SERVE A PUBLIC PURPOSE AND APPROVE PAYMENT

Sponsored by: *Councilmember Gina Gregory*

WHEREAS, *Councilmember Gregory wishes to appropriate **$1,000.00** to **John Will Elementary School**, from District **7** Discretionary Funds (10041020 42080)*; and

WHEREAS, ***John Will Elementary School**,* is public school in Mobile, Alabama, which the Council may support pursuant to Code of Alabama § 16-13-36; and

WHEREAS, the Attorney General of the State of Alabama has opined that the granting of public funds is proper if the City Council determines that the same serves a public purpose; and

WHEREAS, the Mobile City Council determines that this appropriation to ***John Will Elementary School**, will be used **to assist with Back-to-School**,* which will serve a public purpose benefiting the City of Mobile and its citizens.

NOW, THEREFORE, BE IT RESOLVED that the Mobile City Council hereby finds and determines that an *appropriation of **$1,000.00** to **John Will Elementary School** for the purposes described hereinabove and pursuant to the language on request* serves a public purpose and the Council further approves and directs the payment of same.

Adopted:

_____
City Clerk

RESOLUTION TO DETERMINE CERTAIN EXPENDITURES
SERVE A PUBLIC PURPOSE AND APPROVE PAYMENT

Sponsored by: *Councilmember Gina Gregory*

WHEREAS, *Councilmember Gregory wishes to appropriate **$1,000.00** to **Orchard Elementary School**, from District **7** Discretionary Funds (10041020 42080)*; and

WHEREAS, ***Orchard Elementary School**,* is public school in Mobile, Alabama, which the Council may support pursuant to Code of Alabama § 16-13-36; and

WHEREAS, the Attorney General of the State of Alabama has opined that the granting of public funds is proper if the City Council determines that the same serves a public purpose; and

WHEREAS, the Mobile City Council determines that this appropriation to ***Orchard Elementary School**, will be used **to assist with Back-to-School**,* which will serve a public purpose benefiting the City of Mobile and its citizens.

NOW, THEREFORE, BE IT RESOLVED that the Mobile City Council hereby finds and determines that an *appropriation of **$1,000.00** to **Orchard Elementary School** for the purposes described hereinabove and pursuant to the language on request* serves a public purpose and the Council further approves and directs the payment of same.

Adopted:

_____
City Clerk

RESOLUTION TO DETERMINE CERTAIN EXPENDITURES SERVE A PUBLIC PURPOSE AND APPROVE PAYMENT

Sponsored by: Mayor Spiro N. Cheriogotis

WHEREAS, Mayor Cheriogotis wishes to appropriate **$10,000.00** to Mobile Arts Council, Inc. from District 8 Discretionary Fund (10040580 42080); and

WHEREAS, Mobile Arts Council, Inc. is an Alabama non-profit corporation which provides a service to the community; and

WHEREAS, the Attorney General of the State of Alabama has opined that the granting of public funds to private groups or corporations is proper if the City Council determines that the same serves a public purpose; and

WHEREAS, the Mobile City Council determines that this appropriation to Mobile Arts Council, Inc. will be used to assist with the Mobile Mural Festival on September 12-13, 2026, which will serve a public purpose benefitting the City of Mobile and its citizens.

NOW, THEREFORE, BE IT RESOLVED that the Mobile City Council hereby finds and determines that an appropriation of **$10,000.00** to Mobile Arts Council, Inc. for the purposes described hereinabove serves a public purpose and the Council further approves and directs the payment of same and further authorizes execution of a standard form City of Mobile council discretionary fund performance contract with said entity, group or individual for the amount set forth herein.

Adopted:

_____
City Clerk

STATE OF ALABAMA)

COUNTY OF MOBILE)

PERFORMANCE CONTRACT
DISCRETIONARY FUND – MAYOR SPIRO N. CHERIOGOTIS

THIS PERFORMANCE CONTRACT (sometimes hereinafter "Agreement") made and entered into on the date last signed below by and between the City of Mobile, a Municipal Corporation of the State of Alabama (sometimes hereinafter "City"), and MOBILE ARTS COUNCIL, INC., an Alabama not-for-profit, (sometimes hereinafter "Contractor"), who agree as follows:

WHEREAS, the Contractor's purpose is to enrich the quality of life in the greater Mobile area by increasing accessibility to the arts and promoting a vibrant cultural community; and,

WHEREAS, said services benefit the public at large and the community and it serves a public purpose for the City desires to assist Contractor financially in providing said services;

NOW, THEREFORE

WITNESSETH:

That the City, for and in consideration of the mutual covenants and agreements hereinafter set forth to be kept and performed by Contractor the other, and other good and valuable consideration, the receipt sufficiency of all of which is hereby acknowledged, does hereby covenant and agree as follows:

1.City hereby agrees to pay the Contractor the sum of **TEN THOUSAND DOLLARS and NO/100 ($10,000.00)**, payable for the period from the execution of this Agreement to September 30, 2026. Said funds will be disbursed in a single payment which shall result from written request to be delivered to the City's Accounting Department.

2. Contractor agrees that it shall be totally responsible for, and shall have exclusive control over the management and disbursement of all such monies received from the City, and that all monies received under this Agreement shall be used only for the following purposes:

To assist with the inaugural Mobile Mural Festival scheduled for September 12-13, 2026, in Mobile, Alabama.

3. The Contractor shall provide to City's Accounting Department an activity report and financial report upon the completion of its services performed under this Agreement. Additionally, Contractor agrees to permit at all reasonable times and places an audit of its books and records by City's duly authorized representatives.

4. Notwithstanding any of the provisions of this Agreement, it is agreed that the City has no financial interest in the business of the Contractor, and shall not be liable for any debts or obligations incurred by Contractor, nor shall City be deemed or construed to be a partner, joint venturer or otherwise interested in the assets of the Contractor, or sums earned or derived by the Contractor, nor shall Contractor at any time or times use the name or credit of the City in purchasing or attempting to purchase any car, equipment, supplies or other thing or things whatsoever.

5. Contractor, in the performance of its operations and obligations hereunder, shall not be deemed to be the agent of the City but shall be deemed to be an independent contractor in every respect and shall take all steps at its own expense, as the City may from time to time request, to indicate that it is an independent contractor. City does not and will not assume any responsibility for the means by which or manner in which services by the Contractor, provided for herein, are performed, but on the contrary, the Contractor shall be wholly responsible therefor.

6. Contractor acknowledges that its identity and peculiar capacity to provide the services described hereinabove constitute a material consideration for City's having entered into this Agreement. Therefore, Contractor shall not transfer or assign this contract or the license or any of the rights or privileges granted herein without the prior written consent of the City; which such consent shall be granted or denied solely at City's discretion.

7. The Contractor hereby agrees to comply strictly with all ordinances of the City of Mobile, Alabama, and the laws of the State of Alabama and of the United States while performing its obligations under the terms of this Agreement.

8. The Contractor agrees that upon violation of any of the covenants and agreements herein contained, on account of any act or omission or commission of the Contractor, the City may, at its option, terminate and cancel this Agreement.

9. The Contractor agrees that it will comply with Title 6 of the Civil Rights Act of 1964 assuring that no person will be excluded from participation in, be denied benefits of, or otherwise be subjected to discrimination on the grounds of race, sex, color, national origin or disability, in connection with federally funded programs.

10. In the event of any breach or apparent breach by Contractor of any of its obligations under the terms of this Agreement, and in the further event that City shall engage the services of an attorney to protect or to enforce its rights with respect to said breach or apparent breach, then and in those events, Contractor agrees to pay and to reimburse any and all reasonable attorneys' fees and expenses which City may incur with respect to City's enforcement of this Agreement;

regardless of whether said attorneys' fees and costs shall be incurred in connection with any litigation or in connection merely with advice and representation provided without litigation.

11. The Contractor agrees and understands that the funding of this Agreement is solely provided from the DISCRETIONARY FUND OF DISTRICT EIGHT. If, at any time during the City's fiscal year, City's actual revenues decrease below that amount which has been projected by the City to sustain the operating budget of the City, this Agreement may be declared null and void and no liability shall accrue to any party hereto. Notwithstanding any of the other provisions contained in this Agreement, City shall maintain the right to terminate this Agreement upon proper notice, which shall be in writing and shall be provided to the Contractor at least thirty (30) days prior to the intended date of cancellation.

12. For the term of this Agreement, the Contractor shall acquire and maintain in full force and effect the following liability and comprehensive insurance issued by a company licensed and qualified to do business in the State of Alabama, ***which such insurance shall name the City of Mobile as an additional insured,*** and shall attach to this contract, as proof thereof, a certificate of insurance issued by an agent licensed and qualified to do business in the State of Alabama:

a. General Liability Insurance - public liability including premises, products and complete operations.

(1) Bodily injury liability:
$250,000 each person
$500,000 each occurrence

(2) Property damage liability - $100,000 each occurrence

Or, (in lieu of (1) and (2) above)

(3) Bodily injury and property damage combined - $500,000 per occurrence

b. Comprehensive - Automobile Liability Insurance including owned, non-owned, and hired vehicles.

(1) Bodily injury liability:
$250,000 each person
$500,000 each occurrence

(2) Property damage liability $100,000 each occurrence

Or, (in lieu of (1) and (2) above)

(3) Bodily injury and property damage combined - $500,000 per occurrence

c. If the certificate of insurance referenced in this Agreement does not evidence insurance of owned vehicles, said certificate and this sentence shall evidence the Contractor's covenant that it does not own any vehicles and that it will not purchase or obtain any vehicles during the term of this Agreement.

Said certificate shall require that said insurance coverage will not be altered or terminated unless City shall be given written notice of such alteration or termination delivered to City not less than thirty (30) days before the effective date of such alteration or termination.

13. Contractor agrees to indemnify, defend and hold harmless, the City, its elected officials, officers, agents, and employees from all costs, liabilities and claims, direct and indirect, for damages of any kind (including interest and attorneys' fees) arising in any way out of the performance of this Agreement and/or the activities of Contractor, its principals, directors, agents, servants and employees in the performance of this Agreement, for which the City is alleged to be liable. In the event that the City, through no fault of its own, is made a party to any lawsuit or legal proceeding arising in any way from this Agreement or any activities conducted pursuant thereto, Contractor hereby agrees to pay all of City's costs of defense, including but not limited to all attorneys fees, court costs, expert witness fees and other expenses, through trial and, if necessary, appeal. This section is not as to third parties or to anyone a waiver of any defense of immunity or statutory damages cap otherwise available to Contractor or City, and these defenses and matters may be raised in the City's behalf in any action or proceeding arising from this Agreement.

14. All notices of cancellation, requests, demands or other communications shall be in writing and duly delivered to the following address for City:

City Clerk
City of Mobile
Post Office Box 1827
Mobile, AL 36633-1827

Copy to: City Attorney
City of Mobile Legal Department
Post Office Box 1827
Mobile, AL 36633-1827

And to Contractor: Mobile Arts Council, Inc.
70 North Joachim Street Ste A
Mobile, AL 36602
ATTN: Sydney Cramer

15. This Agreement is the final expression of the agreement between the parties, and the complete and exclusive statement of the terms agreed upon, and shall supersede all prior negotiations, understandings or agreements. There are no representations, warranties, or stipulations, either oral or written, not contained herein.

16. Any alterations, variations, modifications, or waivers of the provisions of this Agreement shall only be valid when they have been reduced to writing and signed by authorized representatives of the party against whom enforcement is sought.

17. The provisions of this Agreement shall be deemed severable. If any part of this Agreement is rendered void, invalid or unenforceable, such rendering shall not affect the enforceability of the remainder of this Agreement unless the part or parts which are void, invalid or otherwise unenforceable shall substantially impair the value of the entire agreement with respect to any party.

18. This Agreement shall be governed by the laws of the State of Alabama, and the appropriate venue for any actions arising out of this Agreement would be Mobile, Alabama.

19. Contractor shall obtain, at its own expense, all necessary licenses, permits, insurance, authorizations and assurances necessary in order to abide by the terms of this Agreement.

20. Contractor agrees it is not currently engaged in and will not engage in the boycott of a person or an entity based in or doing business with a jurisdiction with which the State of Alabama can enjoy open trade within the meaning of Alabama Code 41-16-5.

21. By signing this contract, the contracting parties affirm, for the duration of the Agreement, that they will not violate federal immigration law or knowingly employ, hire for employment, or continue to employ an unauthorized alien within the state of Alabama. Furthermore, a contracting party found to be in violation of this provision shall be deemed in breach of the Agreement and shall be responsible for all damages resulting therefrom.

22. Contractor shall comply with all Federal, State and local laws concerning nondiscrimination, including but not limited to City of Mobile Ordinance No. 14-034 which requires, inter alia, that all contractors performing work for the City of Mobile not discriminate on the basis of race, creed, color, national origin or disability, require that all subcontractors they engage do the same, and make every reasonable effort to assure that fifteen percent of the work performed under contract be awarded to socially and economically disadvantaged individuals and business entities.

IN WITNESS WHEREOF, we have hereunto set our hands and seals on the day and year written below.

MOBILE ARTS COUNCIL, INC.

BY Angela Montgomery
Its Authorized Agent

Print name Angela Montgomery

I declare under penalty of perjury that all facts, figures, reports, budgets, request and supporting documentation submitted to procure public funds are true and correct. I further declare that I do so with a continued obligation to supplement said information.

STATE OF ALABAMA)

COUNTY OF MOBILE)

I, the undersigned Notary Public, in and for said County in said State, hereby certify that Angela Montgomery whose name as AUTHORIZED AGENT of MOBILE ARTS COUNCIL, INC., an Alabama not-for-profit organization, is signed to the foregoing Performance Contract, and who is known to me, acknowledged before me on this day that, being informed of the contents of the above and foregoing Performance Contract, (s)he, as such officer and with full authority executed the same voluntarily for and as the act of said corporation on the day the same bears date.

Given under my hand this the 30th day of JUNE, 2026

(SEAL)

STATE OF ALABAMA NOTARY PUBLIC
STACEY B. DRISKELL
My Commission Expires
May 7, 2028

Stacey B. Driskell
Notary Public
State of Alabama At-Large
My Commission Expires: 5/7/2028

CITY OF MOBILE, A Municipal Corporation

BY _____
Spiro N. Cheriogotis, Mayor

ATTEST:

BY _____
Its City Clerk

CAPITAL CONTRACT SUMMARY SHEET

AGENDA ITEM SUMMARY SHEET

Agenda of: July 7, 2026

Submitted by:
John Paine, Purchasing Agent

Sponsored by:
Spiro Cheriogotis, Mayor

Purpose and Scope of Project:
To approve issuance of purchase order to Cowin Equipment Co Inc for one Takeuchi TL12V2 CRHR compact track loader for Stormwater Dept.

Amount of Contract:
$95,660.80

Funding Source
General fund.

ATTACHMENTS:
1. 20260629 Cowin Agenda Package POs

REVIEWERS:
Donald Rose
James Barber

AGENDA ITEM SUMMARY SHEET

Print Page | Reset

Agenda of: 7 July 2026 (Date) Item No. _____

Submitted by: Procurement (Department) John Paine, Purchasing Agent (Department Head)

Sponsored by: Spiro N. Cheriogotis (Name) Mayor (Title)

Reviewed by: _____ (Executive Director)

Routing Authorized: James Barber (Mayor's Office) _____ (Date)

A brief synopsis and explanation of the following:

PROJECT NAME: Approval of Purchase Order to Cowin Equipment Co Inc

PURPOSE & SCOPE OF PROJECT:
To approve issuance of purchase order to Cowin Equipment Co Inc for one Takeuchi TL12V2 CRHR compact track loader for Stormwater Dept.
General fund.

RESOLUTION ☒ ORDINANCE ☐ OTHER ☐

AMOUNT OF CONTRACT: $95,660.80

FUNDING SOURCE:

Budget Item: See Requisition Discretionary Funds: _____

Budget amendment: REDUCE ☐ INCREASED ☐

Grant funds: _____ Matching funds: _____

Associated Costs:

Current year (itemize)
Type: _____ Amount: _____

Future years
Year: _____ Amount: _____

**If Cost will continue, write "indefinite" and list project annual cost.*

Effective date of contract: On issuance to vendor.

Renewal date of contract (if applicable): _____

If not bid, state reason: Al state contract

How many bidders received bid packages (if applicable): 6

How many bidders submitted bids (if applicable): 6 quotes

If this is not the lowest bid, explain why not:

R E S O L U T I O N

Sponsored by: Mayor Spiro N. Cheriogotis

BE IT RESOLVED BY THE CITY COUNCIL OF MOBILE, ALABAMA, that the Purchasing Agent is authorized to execute, for and on behalf of the City of Mobile, a purchase order to the indicated vendor in the approximate amount stated, and to approve the supporting bid award if required, for the following requisition as indicated below and attached herein:

Requisition	Fiscal Year	Department	Description	Amount	Vendor
10448	2026	(2050) FLEET MANAGEMENT - GARAGE	ONE TAKEUCHI TL12V2 CRHR COMPACT TRACK LOADER FOR STORMWATER DEPT (AL STATE CONTRACT)	$95,660.80	(37501) COWIN EQUIPMENT CO INC

Adopted:

_____

City Clerk

Bill To	Requisition 00010448-00 FY 2026
MUNICIPAL GARAGE ATTN: SEAN	
770 GAYLE STREET	Acct No:
	1000.40.20.2070.2070.2070.0000.0000.45040.
MOBILE, AL	Review:
36604	Buyer: 9105paij
SEAN.CLARK@CITYOFMOBILE.ORG	Status: Released Page 1

Vendor	Ship To
COWIN EQUIPMENT CO INC	MOTOR POOL - ATTN: ADAM LYNN
P O DRAWER 29	770 GAYLE STREET
	MOBILE, AL 36604
MOBILE, AL 36601	AGEET@CITYOFMOBILE.GOV
Tel#251-680-7622	Delivery Reference
Fax 251-633-9157	TRAVESIA AGEE
	Deliver To
	MUNICIPAL GARAGE ATTN: SEAN
	770 GAYLE STREET
	MOBILE, AL 36604

Date Ordered	Vendor Number	Date Required	Ship Via	Terms	Department
06/09/26	037501				FLEET MANAGEMENT-GARAGE

LN	Description / Account	Qty	Unit Price	Net Price
001	COMPACT TRACK LOADER AS FOLLOWS: VENDOR TO PROVIDE A TAKEUCHI MODEL TL12V2CRHR TRACKED LOADER. PRICING AS PER STATE OF ALABAMA CONTRACT MA23000004123 AND YOUR EMAILED QUOTE DATED 6-12-2026 Additional Description Notes --- JOHN DEERE COMPACT TRACK LOADER AS FOLLOWS: 2026 JOHN DEERE 333 PTIER COMPACT TRACK LOADER WITH DOZER BLADE AS REQUESTED BY 2096-STORMWATER	1.00 EACH	95660.80000	95660.80
1	1000.40.20.2070.2070.2070.0000.0000.45040.			95660.80

Ship To
MOTOR POOL - ATTN: ADAM LYNN
770 GAYLE STREET
MOBILE, AL 36604
Delivery Reference
TRAVESIA AGEE

Deliver To
MUNICIPAL GARAGE ATTN: SEAN
770 GAYLE STREET
MOBILE, AL 36604

Requisition Link

Requisition Total 95660.80

Bill To	Requisition 00010448-00 FY 2026
MUNICIPAL GARAGE ATTN: SEAN	
770 GAYLE STREET	Acct No:
	1000.40.20.2070.2070.2070.0000.0000.45040.
MOBILE, AL	Review:
36604	Buyer: 9105paij
SEAN.CLARK@CITYOFMOBILE.ORG	Status: Released Page 2

Vendor	Ship To
COWIN EQUIPMENT CO INC	MOTOR POOL - ATTN: ADAM LYNN
P O DRAWER 29	770 GAYLE STREET
	MOBILE, AL 36604
MOBILE, AL 36601	AGEET@CITYOFMOBILE.GOV
Tel#251-680-7622	Delivery Reference
Fax 251-633-9157	TRAVESIA AGEE
	Deliver To
	MUNICIPAL GARAGE ATTN: SEAN
	770 GAYLE STREET
	MOBILE, AL 36604

Date Ordered	Vendor Number	Date Required	Ship Via	Terms	Department
06/09/26	037501				FLEET MANAGEMENT-GARAGE

LN	Description / Account	Qty	Unit Price	Net Price

***** General Ledger Summary Section *****

Account	Amount	Remaining Budget
1000.40.20.2070.2070.2070.0000.0000.45040.	95660.80	1428769.01

PUBLIC SERVICES ADMINISTRATION FLEET VEHICLES

***** Approval/Conversion Info *****

Activity	Date	Clerk	Comment
CCancelled	06/26/26	JOHN PAINE	GL Allocation changed
Approved	04/06/26	MATTHEW ANDERSON	Auto approved by: 910518244
Approved	04/06/26	SHONNDA SMITH	
Approved	04/06/26	CHERI BOUCHER	Auto approved by: 910518244
Forward	06/09/26	MATTHEW ANDERSON	Automatic Forward to 910510856
Forward	06/09/26	MATTHEW ANDERSON	Automatic Forward to 910510856
Approved	06/10/26	DWIGHT D AUSTIN	
Approved	06/10/26	SHONNDA SMITH	Auto approved by: 910510856
Approved	06/10/26	CHERI BOUCHER	Auto approved by: 910510856
Approved	06/10/26	DWIGHT D AUSTIN	
Approved	06/10/26	ASHLEY ADAMS	Auto approved by: 910510856
Approved	06/29/26	MATTHEW ANDERSON	Auto approved by: 910518244
Approved	06/29/26	SHONNDA SMITH	
Approved	06/29/26	CHERI BOUCHER	Auto approved by: 910518244
Approved	06/29/26	MATTHEW ANDERSON	
Approved	06/29/26	ASHLEY ADAMS	Auto approved by: 910516584
Approved	04/06/26	MATTHEW ANDERSON	Auto approved by: 910518244
Approved	04/06/26	SHONNDA SMITH	
Approved	04/06/26	CHERI BOUCHER	Auto approved by: 910518244
Forward	06/10/26	MATTHEW ANDERSON	Automatic Forward to 910510856
Approved	06/10/26	DWIGHT D AUSTIN	
Approved	06/10/26	SHONNDA SMITH	

Bill To	Requisition 00010448-00 FY 2026
MUNICIPAL GARAGE ATTN: SEAN	
770 GAYLE STREET	Acct No:
	1000.40.20.2070.2070.2070.0000.0000.45040.
MOBILE, AL	Review:
36604	Buyer: 9105paij
SEAN.CLARK@CITYOFMOBILE.ORG	Status: Released Page 3

Vendor	Ship To
COWIN EQUIPMENT CO INC	MOTOR POOL - ATTN: ADAM LYNN
P O DRAWER 29	770 GAYLE STREET
	MOBILE, AL 36604
MOBILE, AL 36601	AGEET@CITYOFMOBILE.GOV
Tel#251-680-7622	Delivery Reference
Fax 251-633-9157	TRAVESIA AGEE
	Deliver To
	MUNICIPAL GARAGE ATTN: SEAN
	770 GAYLE STREET
	MOBILE, AL 36604

Date Ordered	Vendor Number	Date Required	Ship Via	Terms	Department
06/09/26	037501				FLEET MANAGEMENT-GARAGE

LN	Description / Account		Qty	Unit Price	Net Price
	Approved	06/10/26 CHERI BOUCHER		Auto approved by: 910518244	
	Approved	06/29/26 MATTHEW ANDERSON			
	Approved	06/29/26 SHONNDA SMITH		Auto approved by: 910516584	
	Approved	06/29/26 CHERI BOUCHER		Auto approved by: 910516584	
	Rejected	05/21/26 JOHN PAINE		when they get the new specs up	
	Queued	06/29/26 DONALD ROSE		when they get the new specs up	
	Queued	06/29/26 SANDRA LEWIS		when they get the new specs up	
	Queued	06/29/26 STEVEN KRONINGER		when they get the new specs up	
	Queued	06/29/26 MARYLYN BUSCHELL		when they get the new specs up	
	Queued	06/29/26 JAMES NEESE		when they get the new specs up	
	Queued	06/29/26 PATRICIA KENNEDY-JONES		when they get the new specs up	
	Queued	06/29/26 REBECCA CRUMPLER		when they get the new specs up	
	Queued	06/29/26 ANNE FOLEY		when they get the new specs up	
	Queued	06/29/26 JOHN PAINE		when they get the new specs up	

Authorized By: _____ Date: _____
Signature

Contract Header

Contract
Skid Steer/Compact Excavator (Takeuchi/Cowin)

Type
Master Agreement

Supplier
Cowin Equipment Co. Inc.

Contract Code
MA230000004123

Linked Solicitation
Skid Steer Loader/Compact Excavator

Sourcing Number
SRC0000015709

Public Comments
Provides skid steer loaders, compact track loaders, compact wheel loaders, and compact excavators in multiple size categories, along with compatible attachments and related parts.

Contact Information

Contract Responsible

First name	Last name	Email	Phone
Wayne	Gautney	wayne.gautney@procurement.alabama.gov	334-242-7173

1 Record(s)

Supplier Contact

First name	Last name	Email	Phone
john	edwards	jedwards@cowin.com	850-685-7055

1 Record(s)

Contract Scope

Organizations
State of Alabama, G41 Procurement

Contract Validity

Start Date
7/20/2023

End Date
7/19/2027

Documents

Items

- Master_Agreement_V1.pdf
- Skid_Steer_Compact_Excavator_updated__3_(7).pdf
- Skid_Steer_loaders_terms_and_conditions (8).pdf
- Master_Agreement_V1.pdf
- Executive Summary Skid Steer Compact Excavator.pdf

Item Name	Product Code	UOM
Track or Wheel Loader 60 - 74 HP.	3	USD
Attachments Track or Wheel Loader	4	USD
Track or Wheel Loader 75 - 90 HP.	5	USD
Attachments Track or Wheel Loader	6	USD
Track or Wheel Loader 91 - < HP	7	USD
Compact Excavator Attachments	8	USD
Compact Excavators > 2 Ton	9	USD
Compact Excavator Attachments	10	USD
Compact Excavators 2 - 5 Ton	11	USD
Compact Excavator Attachments	12	USD
Compact Excavators 5.1 - 8 Ton	13	USD
Compact Excavator Attachments	14	USD
Compact Excavators 8.1 - 10 Ton	15	USD
Compact Excavator Attachments	16	USD

CAPITAL CONTRACT SUMMARY SHEET

AGENDA ITEM SUMMARY SHEET

Agenda of: July 7, 2026

Submitted by:
John Paine, Purchasing Agent

Sponsored by:
Spiro Cheriogotis, INACTIVE

Purpose and Scope of Project:
To approve issuance of purchase order to Graybar Electric Co Inc for five Global Lighting GP137 deocrative aluminum light poles with cross arms and light fixtures for Traffic Engineering.

Amount of Contract:
$20,336.30

Funding Source
Capital - Traffic Signal & Street Light Maint.

ATTACHMENTS:
1. 20260629 Graybar Agenda Package POs

REVIEWERS:
Donald Rose
James Barber

AGENDA ITEM SUMMARY SHEET

Print Page | Reset

Agenda of: 7 July 2026 (Date) Item No. _____

Submitted by: Procurement (Department) John Paine, Purchasing Agent (Department Head)

Sponsored by: Spiro N. Cheriogotis (Name) Mayor (Title)

Reviewed by: _____ (Executive Director)

Routing Authorized: James Barber (Mayor's Office) _____ (Date)

A brief synopsis and explanation of the following:

PROJECT NAME: Approval of Purchase Order to Graybar Electric Co Inc

PURPOSE & SCOPE OF PROJECT:

To approve issuance of purchase order to Graybar Electric Co Inc for five Global Lighting GP137 deocrative aluminum light poles with cross arms and light fixtures for Traffic Engineering.
Capital - Traffic Signal & Street Light Maint.

RESOLUTION ☒ ORDINANCE ☐ OTHER ☐

AMOUNT OF CONTRACT: $20,336.30

FUNDING SOURCE:

Budget Item: See Requisition Discretionary Funds: _____

Budget amendment: REDUCE ☐ INCREASED ☐

Grant funds: _____ Matching funds: _____

Associated Costs:

Current year (itemize)
Type: _____ Amount: _____

Future years
Year: _____ Amount: _____

**If Cost will continue, write "indefinite" and list project annual cost.*

Effective date of contract: On issuance to vendor.

Renewal date of contract (if applicable): _____

If not bid, state reason: Omnia cooperative purchasing agreement, not on state contract.

How many bidders received bid packages (if applicable): na

How many bidders submitted bids (if applicable): na

If this is not the lowest bid, explain why not:

R E S O L U T I O N

Sponsored by: Mayor Spiro N. Cheriogotis

BE IT RESOLVED BY THE CITY COUNCIL OF MOBILE, ALABAMA, that the Purchasing Agent is authorized to execute, for and on behalf of the City of Mobile, a purchase order to the indicated vendor in the approximate amount stated, and to approve the supporting bid award if required, for the following requisition as indicated below and attached herein:

Requisition	Fiscal Year	Department	Description	Amount	Vendor
14101	2026	(2060) TRAFFIC ENGINEERING	FIVE GLOBAL LIGHTING GP137 DECORATIVE ALUMINUM LIGHT POLES WITH CROSS-ARMS AND LIGHT FIXTURES FOR TRAFFIC ENGINEERING (PRICE BELOW BID REQUIREMENT; OMNIA COOPERATIVE PURCHASING AGREEMENT, NOT ON STATE CONTRACT)	$20,336.30	(75199) GRAYBAR ELECTRIC CO INC

Adopted:

_____
City Clerk

Bill To	Requisition 00014101-00 FY 2026
ACCOUNTS PAYABLE	
P O BOX 389	Acct No:
	2000.80.00.0000.0000.0000.0000.0000.44020.
MOBILE, AL	Review:
36601	Buyer: 910518227
vendorinvoices@cityofmobile.org	Status: Approved Page 1

Vendor	Ship To
GRAYBAR ELECTRIC CO INC	ELECTRICAL
4359 HALLS MILL RD	854 GAYLE STREET
	MOBILE, AL 36604
MOBILE, AL 36691	DLOVE@CITYOFMOBILE.ORG
Tel#251-706-5605	Delivery Reference
Fax 251-666-6293	DIANNA LOVE
	Deliver To
	TRAFFIC ENGINEERING
	852 GAYLE STREET
	MOBILE, AL 36604

Date Ordered	Vendor Number	Date Required	Ship Via	Terms	Department
06/17/26	075199				TRAFFIC ENGINEERING

LN	Description / Account	Qty	Unit Price	Net Price
	General Notes			
	AS PER YOUR QUOTE 2002503177			
	AND THE OMNIA PARTNERS AGREEMENT EV2370			
001	GP137-12-TNA34/GFCI-TOP-0/BT 12'	5.00	4067.26000	20336.30
	decorative pole with Shephard arm	EACH		
	and LED fixture			
	Vendor Item			
1	2000.80.00.0000.0000.0000.0000.0000.44020.			
	E C1012 .OPERSUPPLS. .			20336.30

Ship To
ELECTRICAL
854 GAYLE STREET
MOBILE, AL 36604
Delivery Reference
DIANNA LOVE

Deliver To
TRAFFIC ENGINEERING
852 GAYLE STREET
MOBILE, AL 36604

Requisition Link

Requisition Total 20336.30

***** Project Ledger Summary Section *****

Bill To	Requisition 00014101-00 FY 2026
ACCOUNTS PAYABLE	
P O BOX 389	Acct No:
	2000.80.00.0000.0000.0000.0000.0000.44020.
MOBILE, AL	Review:
36601	Buyer: 910518227
vendorinvoices@cityofmobile.org	Status: Approved Page 2

Vendor	Ship To
GRAYBAR ELECTRIC CO INC	ELECTRICAL
4359 HALLS MILL RD	854 GAYLE STREET
	MOBILE, AL 36604
MOBILE, AL 36691	DLOVE@CITYOFMOBILE.ORG
Tel#251-706-5605	Delivery Reference
Fax 251-666-6293	DIANNA LOVE
	Deliver To
	TRAFFIC ENGINEERING
	852 GAYLE STREET
	MOBILE, AL 36604

Date Ordered	Vendor Number	Date Required	Ship Via	Terms	Department
06/17/26	075199				TRAFFIC ENGINEERING

LN	Description / Account	Qty	Unit Price / Amount	Net Price / Remaining Budget
	Account			
	E C1012 .OPERSUPPLS. .		20336.30	46749.57

***** General Ledger Summary Section *****

Account	Amount	Remaining Budget
2000.80.00.0000.0000.0000.0000.0000.44020.	20336.30	1267694.88

CAPITAL IMPROVEMENTS FUND EXP OPERATING SUPPLIES

***** Approval/Conversion Info *****

Activity	Date	Clerk	Comment
Approved	06/17/26	ADAM SPENCE	Auto approved by: 91054000
Approved	06/17/26	JENNIFER WHITE	
Approved	06/18/26	BRENDA RHODES	
Approved	06/18/26	TIFFANY HOLLINS	Auto approved by: 910511034
Approved	06/29/26	DONALD ROSE	Auto approved by: 910518227
Approved	06/29/26	SANDRA LEWIS	
Approved	06/29/26	STEVEN KRONINGER	Auto approved by: 910518227
Approved	06/29/26	MARYLYN BUSCHELL	Auto approved by: 910518227
Approved	06/29/26	JAMES NEESE	Auto approved by: 910518227
Approved	06/29/26	PATRICIA KENNEDY-JONES	Auto approved by: 910518227
Approved	06/29/26	REBECCA CRUMPLER	Auto approved by: 910518227
Approved	06/29/26	ANNE FOLEY	Auto approved by: 910518227
Approved	06/29/26	JOHN PAINE	Auto approved by: 910518227

Authorized By: _____ Date: _____
Signature

OMNIA PARTNERS

Industries | Solutions | About Us | Resources & Events | Get Started | OPUS Log In

GraybaR works to your advantage

Graybar

Electrical, Lighting, Data Communications and Security

OMNIA Partners works to connect members to collective buying power. Graybar's contracts provides agencies with cost-saving solutions for any data/communication, networking, wireless, security, electrical and lighting needs. When organizations choose the Graybar cooperative contract through OMNIA Partners, they will receive savings and value that go beyond costs. This contract allows your organization to maximize savings on the products you need while reducing procurement time.

Click Your Industry

- Education | Government
- Nonprofit
- Corporate | Enterprise
- Private Equity



The Bronze Partnership Excellence Award is a testament to the commendable dedication of our valued suppliers. This esteemed medallion is presented to those who have demonstrated a steadfast commitment to our partnership.

Public Sector

- K-12 Education
- Higher Education
- State & Local Government

OMNIA Partners works to connect the public sector to collective buying power. Our Graybar cooperative contract provides public sector agencies with cost-saving solutions for any data/communication, networking, wireless, security, electrical and lighting needs. When organizations choose the Graybar cooperative contract through OMNIA Partners, they will receive savings and value that go beyond costs. This cooperative contract allows your organization to maximize savings on the products you need while reducing procurement time.


Graybar | OMNIA

Serving State & Local Government, Education, Special Districts, and Non-Profits

- **Electrical, Lighting, Data Communications and Security Products and Related Products, Services and Solutions**
  City of Kansas City, MO | EV2370

VIEW CONTRACT DOCUMENTATION

CONTACT US

BUY NOW ON OMNIA Partners OPUS

Graybar Contract Documentation

U.S. Communities, National IPA, & NCPA are wholly-owned subsidiaries of OMNIA Partners, dba OMNIA Partners, Public Sector. All public sector participants already registered with National IPA, U.S. Communities, or NCPA continue to have access to all contracts, with certain exceptions, in the portfolio and do not need to re-register to use a legacy National IPA, legacy U.S. Communities, legacy NCPA, or new OMNIA Partners contract. U.S. Communities, National IPA, and NCPA remain separate legal entities and lead agency contracts completed under each brand are effective and available for use through the contract's approved term. In the event we believe re-registration is necessary for any reason, OMNIA Partners will let you know.

Electrical, Lighting, Data Communications and Security Products and Related Products, Services and Solutions

City of Kansas City, MO
Contract Number: EV2370

Initial Term: February 1, 2018 through January 31, 2023
Renewal Options: Option to renew for three (3) additional two-year periods through January 31, 2029
RENEWED THROUGH January 31, 2029

DOWNLOAD CONTRACT FILES

Executive Summary

- Executive Summary
- Pricing
- Uniform Guidance
- Due Diligence

Master Agreement Documents

- EV2370 Master Agreement Graybar
- New Jersey Disclosure
- Notice of Intent to Renew
- Contract Renewal
- Contract Amendment 1
- Contract Amendment 2

Solicitation Process

- EV2370 RFP
- EV2370 RFP Postings

INDUSTRIES
K-12 Education
Higher Education
Government
Nonprofit
Enterprise
Corporate
Private Equity
Real Estate

SOLUTIONS
Contract Offerings
OPUS
Data & Spend Analytics
Industry Experts

ABOUT US

RESOURCES

OMNIA® PARTNERS

5001 Aspen Grove Drive

info@omniapartners.com

ELECTRICAL, LIGHTING, DATA COMMUNICATIONS AND SECURITY PRODUCTS
AND RELATED PRODUCTS, SERVICES AND SOLUTIONS
Executive Summary

Lead Agency: City of Kansas City, Missouri

Solicitation: RFP365

RFP Issued: September 6, 2017

Pre-Proposal Date: September 20, 2017

Response Due Date: October 6, 2017

Proposals Received: #3

Awarded to: Graybar Electric Company, Inc. contract #EV2370

The City of Kansas City, Missouri Procurement Services Division issued RFP #EV2370 on September 6, 2017, to establish a national cooperative contract for Electrical, Lighting, Data Communications and Security Products and Related Products, Services and Solutions.

The solicitation included cooperative purchasing in Section 1. Master Agreement:

The City of Kansas City, MO (herein "Lead Public Agency") on behalf of itself and all states, local governments, school districts, and higher education institutions in the United States of America, and other government agencies and nonprofit organizations (herein "Participating Public Agencies") is soliciting proposals from qualified suppliers to enter into a Master Agreement for a complete line of Electrical, Lighting, Data Communications, and Security Products and Related Products, Services and Solutions (herein "Products and Services").

And Section 3. U.S. Communities:

U.S. Communities Government Purchasing Alliance (herein "U.S. Communities") assists Participating Public Agencies to reduce the cost of purchased goods through strategic sourcing that combines the volumes and the purchasing power of public agencies nationwide. This is accomplished through an award of competitively solicited contracts for high quality products and services by large and well recognized public agencies (herein "Lead Public Agencies"). The contracts provide for use by not only the respective Lead Public Agency, but also by other Participating Public Agencies.

Notice of the solicitation was sent to potential offerors, as well as advertised in the following:

- Seattle.gov – The Buy Line Blog
- Daily Journal of Commerce, OR
- The Advocate, LA
- The Honolulu Star, HI
- DEMANDSTAR, ONVIA
- City of Kansas City, Missouri
- Merx.com
- The New York State Contract Reporter
- Washington Electronic Business Solution
- U.S. Communities - Website

On October 6, 2017 proposals were received from the following offerors:

- Graybar Electric Company, Inc.
- HB (Delivering Systems LLC/DBA High Biometrics)
- supplyFORCE

Upon evaluation, the committee elected to award to the most responsive proposal Graybar Electric Company, Inc. for electrical, lighting, data communications and security products and related products, services and solutions.

Contract includes:

Graybar offers a robust selection of products in electrical and lighting, data communication and security, hardware, and services. Solution benefits include:

- Comprehensive Products, Services, & Solutions
- Next day service is free of charge for materials stocked in the branch and within the standard service area
- Volume Incentive

Term:

Contract period from February 1, 2018 through January 31, 2023 with the option to renew to for up to three (3) additional two (2) year terms through January 31, 2029.

Pricing/Discount: Discounts are based on Graybar List Price or Cost in effect at the time of order. Visit Graybar landing page *Graybar Online Store* for more details.

OMNIA Partners, Public Sector Landing Pages: https://www.omniapartners.com/publicsector/contracts/supplier-contracts/graybar

Location:
401 Adams Avenue, Suite 280
Montgomery, AL 36104-4338

Mailing Address:
P.O. Box 302251
Montgomery, AL 36130-2251
Telephone (334) 242-9200
Fax (334) 242-1775
www.examiners.alabama.gov

Rachel Laurie Riddle
Chief Examiner

December 23, 2025

Alabama County Commissions
Alabama Municipalities
City and County Boards of Education

To Whom It May Concern,

In accordance with Sections 16-13B-2(a)(13) and 41-16-51(a)(16), *Ala. Code* 1975, as amended by Act No. 2023-135, the Department has reviewed the competitive bidding process used by Omnia Partners Public Sector ("Omnia"), a national purchasing cooperative, for the contracts awarded as of the date of this letter. With the exception of the contracts referenced below, the Department did not identify any matters that were contrary to proper purchasing procedures or routine governmental procurement practices. Each contract was awarded by various governmental entities pursuant to the competitive bid laws in the state of the awarding authority.

Based on the Department's review, the competitive bid process used by Omnia is approved for use through **December 31, 2026**. This approval authorizes the purchase, lease, or lease/purchase of certain goods or services, other than voice or data wireless communication services, when certain statutory conditions are fulfilled. See Sections 16-13B-2(a)(13) and 41-16-51(a)(16), *Ala. Code* 1975, as amended by Act No. 2023-135. **Please note, "dynamic pricing" contracts, including but not limited to, awarded Contracts MA3457 and R-TC-17006, are specifically excluded from this approval.**

Prior to utilizing Omnia, each governmental entity must verify that the goods or services to be purchased, leased, or lease/purchased are either not at the time available on the state purchasing program or are available at a price equal to or less than that on the state purchase program. *Id.* Any such purchases, leases, or lease/purchases must be made through a participating Alabama vendor holding an Alabama business license if such a vendor exists. *Id.* Any such vendor shall also comply with Section 41-16-51(a)(16)d, *Ala. Code* 1975 when applicable. Further, all purchases must comply with the requirements of *Uniform Guidance*.

Should the Department receive notice that Omnia, its awarding authorities, or its awarded vendors are allowing Alabama governmental entities to make unauthorized purchases or other unlawful business transactions, Omnia's competitive bid process approval will subject to immediate revocation by the Department.

Attention Counties and Municipalities:

Please be advised, this letter authorizes the purchase of materials or equipment that are otherwise part of a contract for "public works," as defined in Section 39-2-1(6), *Ala. Code* 1975, as long as the remaining portion of the public works project is subject to the requirements of Title 39, even if the remaining portion of the project would involve an amount less than $100,000 as a result of the exclusion of the purchase of the materials or equipment. See Section 39-2-2(m)(1) and (2), *Ala. Code* 1975, as amended by Act 2023-497.

If the Department can be of further assistance, please let us know.

Sincerely,

Rachel Laurie Riddle
CHIEF EXAMINER

RLR/lbm

CAPITAL CONTRACT SUMMARY SHEET

AGENDA ITEM SUMMARY SHEET

Agenda of: July 7, 2026

Submitted by:
John Paine, Purchasing Agent

Sponsored by:
Spiro Cheriogotis, INACTIVE

Purpose and Scope of Project:
To approve issuance of purchase order to Muse Software Inc for one-year subscription and implementation for Muse Point of Sale software for Maritime Museum.

Amount of Contract:
$20,000.00

Funding Source
General fund

ATTACHMENTS:
1. 20260629 Muse Agenda Package POs

REVIEWERS:
Donald Rose
James Barber

AGENDA ITEM SUMMARY SHEET

Print Page | Reset

Agenda of: 7 July 2026 (Date) Item No. _____

Submitted by: Procurement (Department) John Paine, Purchasing Agent (Department Head)

Sponsored by: Spiro N. Cheriogotis (Name) Mayor (Title)

Reviewed by: _____ (Executive Director)

Routing Authorized: James Barber (Mayor's Office) _____ (Date)

A brief synopsis and explanation of the following:

PROJECT NAME: Approval of Purchase Order to Muse Software Inc

PURPOSE & SCOPE OF PROJECT:
To approve issuance of purchase order to Muse Software Inc for one-year subscription and implementation for Muse Point of Sale software for Maritime Museum.
General fund.

RESOLUTION ☒ ORDINANCE ☐ OTHER ☐

AMOUNT OF CONTRACT: $20,000.00

FUNDING SOURCE:

Budget Item: See Requisition Discretionary Funds: _____

Budget amendment: REDUCE ☐ INCREASED ☐

Grant funds: _____ Matching funds: _____

Associated Costs:

Current year (itemize)
Type: _____ Amount: _____

Future years
Year: _____ Amount: _____

**If Cost will continue, write "indefinite" and list project annual cost.*

Effective date of contract: On issuance to vendor.

Renewal date of contract (if applicable): _____

If not bid, state reason: Price below bid requirement; bid exempt as software.

How many bidders received bid packages (if applicable): na

How many bidders submitted bids (if applicable): na

If this is not the lowest bid, explain why not:

R E S O L U T I O N

Sponsored by: Mayor Spiro N. Cheriogotis

BE IT RESOLVED BY THE CITY COUNCIL OF MOBILE, ALABAMA, that the Purchasing Agent is authorized to execute, for and on behalf of the City of Mobile, a purchase order to the indicated vendor in the approximate amount stated, and to approve the supporting bid award if required, for the following requisition as indicated below and attached herein:

Requisition	Fiscal Year	Department	Description	Amount	Vendor
14191	2026	(4020) GULFQUEST MARITIME MUSEUM	ONE-YEAR SUBSCRIPTION AND IMPLEMENTATION FEE FOR MUSE POINT-OF-SALE SOFTWARE FOR MARITIME MUSEUM (PRICE BELOW BID REQUIREMENT; BID EXEMPT AS SOFTWARE)	$20,000.00	(300393) MUSE SOFTWARE INC

Adopted:

_____

City Clerk

Bill To	Requisition 00014191-00 FY 2026
ACCOUNTS PAYABLE	
P O BOX 389	Acct No:
	1000.50.23.4020.4020.4000.0000.0000.44020.
MOBILE, AL	Review:
36601	Buyer: 9105fola
vendorinvoices@cityofmobile.org	Status: Approved Page 1

Vendor	Ship To
MUSE SOFTWARE INC.	National Maritime Museum GOM
2125 BISCAYNE BLVD STE 204 #23	155 South Water Street
	MOBILE, AL 36602-3710
MIAMI, FL 33137	STEWART.HOOD@CITYOFMOBILE.ORG
Tel#7864083211	Delivery Reference
	STEWART HOOD
	Deliver To
	National Maritime Museum GOM
	155 South Water Street
	MOBILE, AL 36602-3710

Date Ordered	Vendor Number	Date Required	Ship Via	Terms	Department
06/18/26	300393				GULFQUEST MARITIME MUSEUM

LN	Description / Account	Qty	Unit Price	Net Price
	General Notes			
	PER STATE OF ALABAMA CODE 41-16-51(a)(8) SOFTWARE EXEMPTION.			
001	SOFTWARE COMPUTER RENTA/LEASE -MUSE SUBSCRIPTION ORDER -TERM: ONE YEAR -FEES: $13,500 PER ONE YEAR Vendor Item	1.00 EACH	13500.00000	13500.00
	1 1000.50.23.4020.4020.4000.0000.0000.44020.			13500.00
	Ship To National Maritime Museum GOM 155 South Water Street MOBILE, AL 36602-3710 Delivery Reference STEWART HOOD			
	Deliver To National Maritime Museum GOM 155 South Water Street MOBILE, AL 36602-3710			
002	SOFTWARE COMPUTER RENTA/LEASE -MUSE IMPLEMENTATION FEES -RATE: $6,500 Vendor Item	1.00 EACH	6500.00000	6500.00

Bill To	Requisition 00014191-00 FY 2026
ACCOUNTS PAYABLE	
P O BOX 389	Acct No:
	1000.50.23.4020.4020.4000.0000.0000.44020.
MOBILE, AL	Review:
36601	Buyer: 9105fola
vendorinvoices@cityofmobile.org	Status: Approved Page 2

Vendor	Ship To
MUSE SOFTWARE INC.	National Maritime Museum GOM
2125 BISCAYNE BLVD STE 204 #23	155 South Water Street
	MOBILE, AL 36602-3710
MIAMI, FL 33137	STEWART.HOOD@CITYOFMOBILE.ORG
Tel#7864083211	Delivery Reference
	STEWART HOOD
	Deliver To
	National Maritime Museum GOM
	155 South Water Street
	MOBILE, AL 36602-3710

Date Ordered	Vendor Number	Date Required	Ship Via	Terms	Department
06/18/26	300393				GULFQUEST MARITIME MUSEUM

LN	Description / Account	Qty	Unit Price	Net Price
1	1000.50.23.4020.4020.4000.0000.0000.44020.			6500.00

Ship To
National Maritime Museum GOM
155 South Water Street
MOBILE, AL 36602-3710
Delivery Reference
STEWART HOOD

Deliver To
National Maritime Museum GOM
155 South Water Street
MOBILE, AL 36602-3710

Requisition Link

Requisition Total 20000.00

***** General Ledger Summary Section *****

Account	Amount	Remaining Budget
1000.50.23.4020.4020.4000.0000.0000.44020.		
	20000.00	143380.50
GULFQUEST EXP	OPERATING SUPPLIES	

***** Approval/Conversion Info *****

Activity	Date	Clerk	Comment
Forward	06/23/26	CORY ADAIR	Automatic Forward to 910522144
Approved	06/23/26	BAYNE DUNAWAY	Auto approved by: 910522144
Approved	06/23/26	KAREN POTH	Auto approved by: 910522144
Approved	06/23/26	VICKI ROOKS	
Forward	06/23/26	CORY ADAIR	Automatic Forward to 910522144
Approved	06/23/26	VICKI ROOKS	

Bill To	Requisition 00014191-00 FY 2026
ACCOUNTS PAYABLE	
P O BOX 389	Acct No:
	1000.50.23.4020.4020.4000.0000.0000.44020.
MOBILE, AL	Review:
36601	Buyer: 9105fola
vendorinvoices@cityofmobile.org	Status: Approved Page 3

Vendor	Ship To
MUSE SOFTWARE INC.	National Maritime Museum GOM
2125 BISCAYNE BLVD STE 204 #23	155 South Water Street
	MOBILE, AL 36602-3710
MIAMI, FL 33137	STEWART.HOOD@CITYOFMOBILE.ORG
Tel#7864083211	Delivery Reference
	STEWART HOOD
	Deliver To
	National Maritime Museum GOM
	155 South Water Street
	MOBILE, AL 36602-3710

Date Ordered	Vendor Number	Date Required	Ship Via	Terms	Department
06/18/26	300393				GULFQUEST MARITIME MUSEUM

LN	Description / Account			Qty	Unit Price	Net Price
	Approved	06/29/26	DONALD ROSE		Auto approved by: 9105fola	
	Approved	06/29/26	SANDRA LEWIS		Auto approved by: 9105fola	
	Approved	06/29/26	STEVEN KRONINGER		Auto approved by: 9105fola	
	Approved	06/29/26	MARYLYN BUSCHELL		Auto approved by: 9105fola	
	Approved	06/29/26	JAMES NEESE		Auto approved by: 9105fola	
	Approved	06/29/26	PATRICIA KENNEDY-JONES		Auto approved by: 9105fola	
	Approved	06/29/26	REBECCA CRUMPLER		Auto approved by: 9105fola	
	Approved	06/29/26	ANNE FOLEY			
	Approved	06/29/26	JOHN PAINE		Auto approved by: 9105fola	

Authorized By: _____ Date: _____
Signature

CAPITAL CONTRACT SUMMARY SHEET

AGENDA ITEM SUMMARY SHEET

Agenda of: July 7, 2026

Submitted by:
John Paine, Purchasing Agent

Sponsored by:
Spiro Cheriogotis, INACTIVE

Purpose and Scope of Project:
To approve issuance of purchase order to Peach State Truck Centers LLC for one 2027 Freightliner M2-211 crew cab truck with 26-foot Morgan dry van body for MFRD USAR.

Amount of Contract:
$276,674.00

Funding Source
General fund.

ATTACHMENTS:
1. 20260629 Peach Agenda Package POs

REVIEWERS:
Donald Rose
James Barber

AGENDA ITEM SUMMARY SHEET

Print Page | Reset

Agenda of: 7 July 2026 (Date) Item No. _____

Submitted by: Procurement (Department) John Paine, Purchasing Agent (Department Head)

Sponsored by: Spiro N. Cheriogotis (Name) Mayor (Title)

Reviewed by: _____ (Executive Director)

Routing Authorized: James Barber (Mayor's Office) _____ (Date)

A brief synopsis and explanation of the following:

PROJECT NAME: Approval of Purchase Order to Peach State Truck Centers LLC

PURPOSE & SCOPE OF PROJECT:
To approve issuance of purchase order to Peach State Truck Centers LLC for one 2027 Freightliner M2-211 crew cab truck with 26-foot Morgan dry van body for MFRD USAR.
General fund.

RESOLUTION ☒ ORDINANCE ☐ OTHER ☐

AMOUNT OF CONTRACT: $276,674.00

FUNDING SOURCE:

Budget Item: See Requisition Discretionary Funds: _____

Budget amendment: REDUCE ☐ INCREASED ☐

Grant funds: _____ Matching funds: _____

Associated Costs:

Current year (itemize)
Type: _____ Amount: _____

Future years
Year: _____ Amount: _____

**If Cost will continue, write "indefinite" and list project annual cost.*

Effective date of contract: On issuance to vendor.

Renewal date of contract (if applicable): _____

If not bid, state reason: Sourcewell cooperative purchasing agreement, not on state contract.

How many bidders received bid packages (if applicable): na

How many bidders submitted bids (if applicable): na

If this is not the lowest bid, explain why not:

R E S O L U T I O N

Sponsored by: Mayor Spiro N. Cheriogotis

BE IT RESOLVED BY THE CITY COUNCIL OF MOBILE, ALABAMA, that the Purchasing Agent is authorized to execute, for and on behalf of the City of Mobile, a purchase order to the indicated vendor in the approximate amount stated, and to approve the supporting bid award if required, for the following requisition as indicated below and attached herein:

Requisition	Fiscal Year	Department	Description	Amount	Vendor
13619	2026	(1510) FIRE ADMINISTRATION	ONE 2027 FREIGHTLINER M2-211 CREW-CAB TRUCK WITH 26-FOOT MORGAN DRY VAN BODY FOR MFRD USAR (SOURCEWELL COOPERATIVE PURCHASING AGREEMENT, NOT ON STATE CONTRACT)	$276,674.00	(300425) PEACH STATE TRUCK CENTERS LLC

Adopted:

_____
City Clerk

Bill To	Requisition 00013619-00 FY 2026
ACCOUNTS PAYABLE	
P O BOX 389	Acct No:
	1000.30.15.1510.1510.1510.0000.0000.45040.
MOBILE, AL	Review:
36601	Buyer: 9105paij
vendorinvoices@cityofmobile.org	Status: Approved Page 1

Vendor	Ship To
PEACH STATE TRUCK CENTERS, LLC.	MOTOR POOL - ATTN: ADAM LYNN
6535 CRESCENT DRIVE	770 GAYLE STREET
	MOBILE, AL 36604
NORCROSS, GA 70031	RICHARDSONV@CITYOFMOBILE.GOV
Tel#770-449-5300	Delivery Reference
	VICTORIA RICHARDSON
	Deliver To
	MOTOR POOL - ATTN: ADAM LYNN
	770 GAYLE STREET
	MOBILE, AL 36604
	Delivery Reference
	CHIEF JASON BROWNE MFRD

Date Ordered	Vendor Number	Date Required	Ship Via	Terms	Department
06/08/26	300425				FIRE ADMINISTRATION

LN	Description / Account	Qty	Unit Price	Net Price
001	2027 Model Year Freightliner M2 112, PER Sourcewell contract 032824-DAI 2027 Model Year Freightliner M2 112 Plus Crew Cab USAR Support Unit with 26 ft Enclosed Morgan Body INCLUDED: 2027 Model year Freightliner M2 112 Plus Crew Cab Chassis Cummins L9 450 HP Engine 26ft Morgan Dry Van Body Maxium 6,500lbs Column Lift Gate 12kw Stand alone Diesel Generator with 4 Hubble 50amp Outlets Whelen Engineering Warning and Scene Light Package 12v Awning Mounted on PS of the Unit Lettering and striping to match current fleet Delivery and Training to the MFRD	1.00 EACH	276474.00000	276474.00

Additional Description Notes

NO FIREFIGHTER, DRIVER, CAPTAIN, DISTRICT CHIEF, CHIEF OF DEPARTMENT, FIRE MECHANIC OR GARAGE SUPERVISOR, HAS THE AUTHORITY OR PERMISSION TO CHANGE THE TERMS OF THIS PURCHASE NOR TO INCURE ANY ADDITIONAL COSTS TO THE CITY OF MOBILE.

ANY ADDITIONAL WORK, EQUIPMENT OR CHANGES THAT INCUR ADDITIONAL COST OR EXPENSE TO THE CITY OF MOBILE AND DONE WITHOUT THE PRIOR WRITTEN PERMISSION OF THE PURCHASING AGENT IS DONE SO AT THE EXPENSE OF THE VENDOR. .....

1	1000.30.15.1510.1510.1510.0000.0000.45040.	276474.00

Bill To	Requisition 00013619-00 FY 2026
ACCOUNTS PAYABLE P O BOX 389 MOBILE, AL 36601 vendorinvoices@cityofmobile.org	Acct No: 1000.30.15.1510.1510.1510.0000.0000.45040. Review: Buyer: 9105paij Status: Approved Page 2

Vendor	Ship To
PEACH STATE TRUCK CENTERS, LLC. 6535 CRESCENT DRIVE NORCROSS, GA 70031 Tel#770-449-5300	MOTOR POOL - ATTN: ADAM LYNN 770 GAYLE STREET MOBILE, AL 36604 RICHARDSONV@CITYOFMOBILE.GOV Delivery Reference VICTORIA RICHARDSON Deliver To MOTOR POOL - ATTN: ADAM LYNN 770 GAYLE STREET MOBILE, AL 36604 Delivery Reference CHIEF JASON BROWNE MFRD

Date Ordered	Vendor Number	Date Required	Ship Via	Terms	Department
06/08/26	300425				FIRE ADMINISTRATION

LN	Description / Account	Qty	Unit Price	Net Price
	Ship To MOTOR POOL - ATTN: ADAM LYNN 770 GAYLE STREET MOBILE, AL 36604 Delivery Reference VICTORIA RICHARDSON Deliver To FIRE CENTRAL SUPPLY 2851 OLD SHELL ROAD MOBILE, AL 36607			
002	DELIVERY FEE Sourcewell contract 032824-DAI	1.00 EACH	200.00000	200.00
1	1000.30.15.1510.1510.1510.0000.0000.45040.			200.00
	Ship To FIRE CENTRAL SUPPLY 2851 OLD SHELL ROAD MOBILE, AL 36607 Delivery Reference VICTORIA RICHARDSON Deliver To FIRE CENTRAL SUPPLY 2851 OLD SHELL ROAD MOBILE, AL 36607			

Bill To	Requisition 00013619-00 FY 2026
ACCOUNTS PAYABLE P O BOX 389 MOBILE, AL 36601 vendorinvoices@cityofmobile.org	Acct No: 1000.30.15.1510.1510.1510.0000.0000.45040. Review: Buyer: 9105paij Status: Approved Page 3

Vendor	Ship To
PEACH STATE TRUCK CENTERS, LLC. 6535 CRESCENT DRIVE NORCROSS, GA 70031 Tel#770-449-5300	MOTOR POOL - ATTN: ADAM LYNN 770 GAYLE STREET MOBILE, AL 36604 RICHARDSONV@CITYOFMOBILE.GOV Delivery Reference VICTORIA RICHARDSON Deliver To MOTOR POOL - ATTN: ADAM LYNN 770 GAYLE STREET MOBILE, AL 36604 Delivery Reference CHIEF JASON BROWNE MFRD

Date Ordered	Vendor Number	Date Required	Ship Via	Terms	Department
06/08/26	300425				FIRE ADMINISTRATION

LN	Description / Account	Qty	Unit Price	Net Price
Requisition Link				
	Requisition Total			276674.00

***** General Ledger Summary Section *****

Account	Amount	Remaining Budget
1000.30.15.1510.1510.1510.0000.0000.45040.	276674.00	199932.32
FIRE ADMINISTRATION EXP FLEET VEHICLES		

***** Approval/Conversion Info *****

Activity	Date	Clerk	Comment
Forward	06/08/26	MATTHEW ANDERSON	Automatic Forward to 910510856
Approved	06/08/26	DWIGHT D AUSTIN	
Approved	06/08/26	SHONNDA SMITH	Auto approved by: 910510856
Approved	06/08/26	CHERI BOUCHER	Auto approved by: 910510856
Approved	06/29/26	DONALD ROSE	Auto approved by: 9105paij
Approved	06/29/26	SANDRA LEWIS	Auto approved by: 9105paij
Approved	06/29/26	STEVEN KRONINGER	Auto approved by: 9105paij
Approved	06/29/26	SAMANTHA COOLEY	Auto approved by: 9105paij
Approved	06/29/26	MARYLYN BUSCHELL	Auto approved by: 9105paij
Approved	06/29/26	JAMES NEESE	Auto approved by: 9105paij
Approved	06/29/26	PATRICIA KENNEDY-JONES	Auto approved by: 9105paij
Approved	06/29/26	REBECCA CRUMPLER	Auto approved by: 9105paij
Approved	06/29/26	ANNE FOLEY	Auto approved by: 9105paij
Approved	06/29/26	JOHN PAINE	

Authorized By: _____ Date: _____
Signature

Daimler Truck North America

Freightliner & Western Star Class 6-8 Trucks

Sourcewell Awarded Contract

#032824-DAI

Maturity Date: 7/9/2028

Website: northamerica.daimlertruck.com/company/sourcewell

Products & Services | Buy Sourcewell | Documents | Contact Information

Products & Services

Sourcewell contract 032824-DAI gives access to the following types of goods and services:

- Vocational - medium, and heavy-duty trucks
- Class 6-8 trucks (26,000-92,000lbs. GVW)
- Multitude of configurations
- Class 6-8 electric trucks
- Natural gas trucks
- Dump trucks
- Refuse / roll-off trucks
- Bulk haul trucks
- Oil and gas trucks
- Utility trucks
- Government and municipality trucks
- Financing and leasing options

Contact us

Have questions about a contract or cooperative purchasing?

Contact our dedicated team online or call 877-585-9706.

Buy Sourcewell

Login to unlock more contract features.

Username

Username

Password

Password

Log In

Forgot username or password?

Setup Buy Sourcewell access

Register for an account

Simply complete the online application, contact our dedicated team, or call 877-585-9706.

Search Suppliers & Contracts

General Contracts

IDIQ Contracts

Sourcewell's website may contain links to nongovernment websites being provided as a convenience and for informational purposes only. Sourcewell neither endorses nor guarantees, in any way, the external organization's services, advice, or products included in these website links. Sourcewell bears no responsibility for the accuracy, legality, or timeliness of any content on the external site or for that of subsequent links. All questions related to content on external sites should be addressed directly to the host of that particular website.

Sourcewell is a local unit of government under Minnesota state statute, and competitively solicits and awards contracts. Purchasing agencies are responsible for performing due diligence and ensuring compliance with applicable federal, state, and local laws, as well as specific funding requirements, in consultation with legal counsel.

©2026 Sourcewell. All rights reserved.

Daimler Truck #032824-DAI

Pricing for contract #032824-DAI offers Sourcewell participating agencies the following discounts:

- 22% - 41% off standard pricing

10 Locations Found

FIND A FREIGHTLINER DEALER

1 PEACH STATE TRUCK CENTERS

(770)449-5300

6535 CRESCENT DRIVE
NORCROSS, GA 30071

2 Miles Away

View Details | Get Directions

Open Now

2 PEACH STATE TRUCK CENTERS

(770)449-5300

6814 BEST FRIEND ROAD
ATLANTA, GA 30340

4 Miles Away

View Details | Get Directions

By Location | By Route

norcross georgia

Search

Browse by Country Browse by State

Filter by Services

Sales	Parts	Service
Elite Support	eCertified	ExpressPoint
Body Shop		

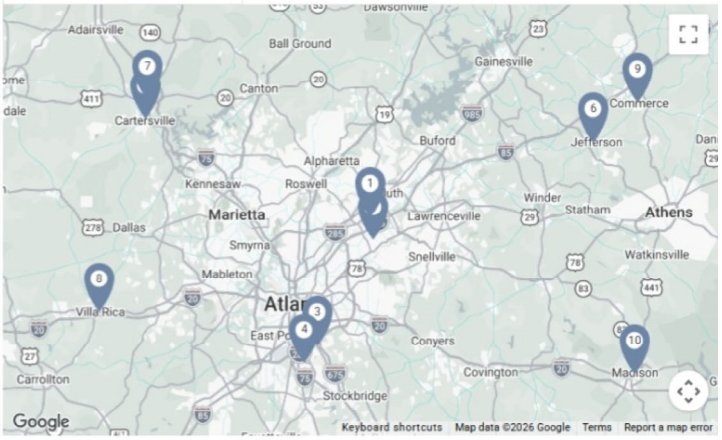

Learn More About Our Dealers

Welcome to Freightliner's Dealer Locator – your ultimate resource for finding trusted service locations conveniently located along your route or in proximity to your current location.

At Freightliner, we recognize that your success hinges on keeping your fleet moving efficiently. That's why we're dedicated to making your job easier and more profitable. With our expansive dealer network, maintaining your Freightliner truck has never been more convenient. Whether it's routine maintenance or unexpected repairs, trust in Freightliner to keep you on the road and ahead of the curve.

When you choose Freightliner, you're getting access to more than 700 service locations and the reliability of our dedicated support staff, from our factory-certified technicians to our toll-free hotline operators. Our job is to make your job easier and more profitable, and with our vast network of service locations, it's never been easier to keep your Freightliner on the road.

Copyright © Daimler Truck North America LLC. Privacy Statement, Legal Notices and Terms.
All rights reserved. Freightliner Trucks is a division of Daimler Truck North America LLC, a Daimler company.
Privacy Settings

Location:
401 Adams Avenue, Suite 280
Montgomery, AL 36104-4338

Mailing Address:
P.O. Box 302251
Montgomery, AL 36130-2251
Telephone (334) 242-9200
Fax (334) 242-1775
www.examiners.alabama.gov

Rachel Laurie Riddle
Chief Examiner

December 23, 2025

Alabama County Commissions
Alabama Municipalities
City and County Boards of Education

To Whom It May Concern,

In accordance with Sections 16-13B-2(a)(13) and 41-16-51(a)(16), *Ala. Code* 1975 as amended by Act No. 2022-135, the Department has reviewed the competitive bidding process used by Sourcewell, a national, governmental purchasing cooperative, for the contracts awarded as of the date of this letter. The Department did not identify any matters that were contrary to proper purchasing procedures or routine governmental procurement practices. Each contract was awarded by Sourcewell pursuant to the competitive bid laws of the State of Minnesota.

Based on the Department's review, the competitive bid process used by Sourcewell is approved for use through **December 31, 2026**. This approval authorizes the purchase, lease, or lease/purchase of certain goods or services, other than voice or data wireless communication services, when certain statutory conditions are fulfilled. See Sections 16-13B-2(a)(13) and 41-16-51(a)(16), *Ala. Code* 1975 as amended by Act No. 2023-135.

Prior to utilizing Sourcewell, each governmental entity must verify that the goods or services to be purchased, leased, or lease/purchased are either not at the time available on the state purchasing program or are available at a price equal to or less than that on the state purchase program. *Id.* Any such purchases, leases, or lease/purchases must be made through a participating Alabama vendor holding an Alabama business license if such a vendor exists. *Id.* Any such vendor shall also comply with Section 41-16-51(a)(16)d, *Ala. Code* 1975 when applicable. Further, all such purchases must comply with the requirements of *Uniform Guidance*.

Should the Department receive notice that Sourcewell or its awarded vendors are allowing Alabama governmental entities to make unauthorized purchases or other unlawful business transactions, Sourcewell's competitive bid process approval will subject to immediate revocation by the Department.

Attention Counties and Municipalities:

Please be advised, this letter authorizes the purchase of materials or equipment that are otherwise part of a contract for "public works," as defined in Section 39-2-1(6), *Ala. Code*

1975, as long as the remaining portion of the public works project is subject to the requirements of Title 39, even if the remaining portion of the project would involve an amount less than $100,000 as a result of the exclusion of the purchase of the materials or equipment. See Section 39-2-2(m)(1) and (2), *Ala. Code* 1975, as amended by Act 2023-497.

If the Department can be of further assistance, please let us know.

Sincerely,

Rachel Laurie Riddle
CHIEF EXAMINER

RLR/lbm

CAPITAL CONTRACT SUMMARY SHEET

AGENDA ITEM SUMMARY SHEET

Agenda of: July 7, 2026

Submitted by:
John Paine, Purchasing Agent

Sponsored by:
Spiro Cheriogotis, INACTIVE

Purpose and Scope of Project:
To approve issuance of purchase order to Research Electronics International LLC for Mobility Enhanced Spectrum Analyzer for detection of hidden electronic devices for Gulf Coast Technology Center.

Amount of Contract:
$15,500.00

Funding Source
General fund

ATTACHMENTS:
1. 20260629 Research Agenda Package POs

REVIEWERS:
Donald Rose
James Barber

AGENDA ITEM SUMMARY SHEET

Print Page | Reset

Agenda of: 7 July 2026 (Date) Item No. _____

Submitted by: Procurement (Department) John Paine, Purchasing Agent (Department Head)

Sponsored by: Spiro N. Cheriogotis (Name) Mayor (Title)

Reviewed by: _____ (Executive Director)

Routing Authorized: James Barber (Mayor's Office) _____ (Date)

A brief synopsis and explanation of the following:

PROJECT NAME: Approval of Purchase Order to Research Electronics International LLC

PURPOSE & SCOPE OF PROJECT:
To approve issuance of purchase order to Research Electronics International LLC for Mobility Enhanced Spectrum Analyzer for detection of hidden electronic devices for Gulf Coast Tech Center. General fund.

RESOLUTION ☒ ORDINANCE ☐ OTHER ☐

AMOUNT OF CONTRACT: $15,500.00

FUNDING SOURCE:

Budget Item: See Requisition Discretionary Funds: _____

Budget amendment: REDUCE ☐ INCREASED ☐

Grant funds: _____ Matching funds: _____

Associated Costs:

Current year (itemize)
Type: _____ Amount: _____

Future years
Year: _____ Amount: _____

**If Cost will continue, write "indefinite" and list project annual cost.*

Effective date of contract: On issuance to vendor.

Renewal date of contract (if applicable): _____

If not bid, state reason: Price below bid requirement.

How many bidders received bid packages (if applicable): na

How many bidders submitted bids (if applicable): na

If this is not the lowest bid, explain why not:

R E S O L U T I O N

Sponsored by: Mayor Spiro N. Cheriogotis

BE IT RESOLVED BY THE CITY COUNCIL OF MOBILE, ALABAMA, that the Purchasing Agent is authorized to execute, for and on behalf of the City of Mobile, a purchase order to the indicated vendor in the approximate amount stated, and to approve the supporting bid award if required, for the following requisition as indicated below and attached herein:

Requisition	Fiscal Year	Department	Description	Amount	Vendor
14506	2026	(1502) GULF COAST TECHNOLGY CENTER	MOBILITY ENHANCED SPECTRUM ANALYZER FOR DETECTION OF HIDDEN ELECTRONIC DEVICES FOR GULF COAST TECHNOLOGY CENTER (PRICE BELOW BID REQUIREMENT)	$15,500.00	(300410) RESEARCH ELECTRONICS INTERNATIONAL LLC

Adopted:

_____

City Clerk

Bill To	Requisition 00014506-00 FY 2026
ACCOUNTS PAYABLE	
P O BOX 389	Acct No:
	1000.30.15.1502.1502.1502.0000.0000.42140.
MOBILE, AL	Review:
36601	Buyer: 9105fola
vendorinvoices@cityofmobile.org	Status: Approved Page 1

Vendor	Ship To
RESEARCH ELECTRONICS INTERNATIONAL, LLC	GULF COAST TECHNOLOGY CENTER
455 SECURITY PL	455 ST LOUIS ST. SUITE 2300
	MOBILE, AL 36602
COOKEVILLE, TN 38506	REBECCA.TURK@CITYOFMOBILE.ORG
Tel#931-537-6032	
Fax 931-537-6089	
	Deliver To
	GULF COAST TECHNOLOGY CENTER
	455 ST LOUIS ST. SUITE 2300
	MOBILE, AL 36602

Date Ordered	Vendor Number	Date Required	Ship Via	Terms	Department
06/26/26	300410	07/06/26			GULF COAST TECHNOLOGY CENTE

LN	Description / Account	Qty	Unit Price	Net Price
	General Notes			
	STATE OF ALABAMA CODE 41-16-51(a)(8) SOFTWARE EXEMPTION.			
	PRICE PER QUOTE #32982			
001	LICENSE FOR SOFTWARE AS SPECIFIED:	1.00 EACH	15450.00000	15450.00
	Additional Description Notes			
	Part ID: 8-00146 MESA 2.0 BASIC License Type: NLR(33)/DDTC:CJ 0697-14 Vendor Item Inventory Item/Loc 1723			
1	1000.30.15.1502.1502.1502.0000.0000.42140.			15450.00
	Ship To GULF COAST TECHNOLOGY CENTER 455 ST LOUIS ST. SUITE 2300 MOBILE, AL 36602			
	Deliver To GULF COAST TECHNOLOGY CENTER 455 ST LOUIS ST. SUITE 2300 MOBILE, AL 36602			

Bill To	Requisition 00014506-00 FY 2026
ACCOUNTS PAYABLE P O BOX 389 MOBILE, AL 36601 vendorinvoices@cityofmobile.org	Acct No: 1000.30.15.1502.1502.1502.0000.0000.42140. Review: Buyer: 9105fola Status: Approved Page 2

Vendor	Ship To
RESEARCH ELECTRONICS INTERNATIONAL, LLC 455 SECURITY PL COOKEVILLE, TN 38506 Tel#931-537-6032 Fax 931-537-6089	GULF COAST TECHNOLOGY CENTER 455 ST LOUIS ST. SUITE 2300 MOBILE, AL 36602 REBECCA.TURK@CITYOFMOBILE.ORG Deliver To GULF COAST TECHNOLOGY CENTER 455 ST LOUIS ST. SUITE 2300 MOBILE, AL 36602

Date Ordered	Vendor Number	Date Required	Ship Via	Terms	Department
06/26/26	300410	07/06/26			GULF COAST TECHNOLOGY CENTE

LN	Description / Account	Qty	Unit Price	Net Price
002	FREIGHT	1.00 EACH	50.00000	50.00
	Vendor Item Inventory Item/Loc 14009			
1	1000.30.15.1502.1502.1502.0000.0000.42140.			50.00

Ship To
GULF COAST TECHNOLOGY CENTER
455 ST LOUIS ST. SUITE 2300
MOBILE, AL 36602

Deliver To
GULF COAST TECHNOLOGY CENTER
455 ST LOUIS ST. SUITE 2300
MOBILE, AL 36602

Requisition Link

Requisition Total 15500.00

***** General Ledger Summary Section *****

Account	Amount	Remaining Budget
1000.30.15.1502.1502.1502.0000.0000.42140. GULF COAST TECHNOLOGY CENTER MISCELLANEOUS SERVICES	15500.00	545603.12

***** Approval/Conversion Info *****

Activity	Date	Clerk	Comment
Approved	06/26/26	JASON SMITH	Reviewed and Approved
Approved	06/26/26	CURTIS GRAVES	Auto approved by: 910520680

Bill To	Requisition 00014506-00 FY 2026
ACCOUNTS PAYABLE	
P O BOX 389	Acct No:
	1000.30.15.1502.1502.1502.0000.0000.42140.
MOBILE, AL	Review:
36601	Buyer: 9105fola
vendorinvoices@cityofmobile.org	Status: Approved Page 3

Vendor	Ship To
RESEARCH ELECTRONICS INTERNATIONAL, LLC	GULF COAST TECHNOLOGY CENTER
455 SECURITY PL	455 ST LOUIS ST. SUITE 2300
	MOBILE, AL 36602
COOKEVILLE, TN 38506	REBECCA.TURK@CITYOFMOBILE.ORG
Tel#931-537-6032	
Fax 931-537-6089	
	Deliver To
	GULF COAST TECHNOLOGY CENTER
	455 ST LOUIS ST. SUITE 2300
	MOBILE, AL 36602

Date Ordered	Vendor Number	Date Required	Ship Via	Terms	Department
06/26/26	300410	07/06/26			GULF COAST TECHNOLOGY CENTE

LN	Description / Account			Qty	Unit Price	Net Price
	Approved	06/29/26	DONALD ROSE		Auto approved by: 9105fola	
	Approved	06/29/26	SANDRA LEWIS		Auto approved by: 9105fola	
	Approved	06/29/26	STEVEN KRONINGER		Auto approved by: 9105fola	
	Approved	06/29/26	MARYLYN BUSCHELL		Auto approved by: 9105fola	
	Approved	06/29/26	JAMES NEESE		Auto approved by: 9105fola	
	Approved	06/29/26	PATRICIA KENNEDY-JONES		Auto approved by: 9105fola	
	Approved	06/29/26	REBECCA CRUMPLER		Auto approved by: 9105fola	
	Approved	06/29/26	ANNE FOLEY			
	Approved	06/29/26	JOHN PAINE		Auto approved by: 9105fola	
	Approved	06/29/26	ANNE FOLEY		Auto approved by: 9105fola	

Authorized By: _____ Date: _____
Signature

CAPITAL CONTRACT SUMMARY SHEET

AGENDA ITEM SUMMARY SHEET

Agenda of: July 7, 2026

Submitted by:
John Paine, Purchasing Agent

Sponsored by:
Spiro Cheriogotis, INACTIVE

Purpose and Scope of Project:
To approve issuance of purchase order to Sansom Equipment Co Inc for one 2027 Kenworth L770 garbage truck with New Way 31 cu yd automated side-load body for Trash Dept .

Amount of Contract:
$398,360.00

Funding Source
General fund

ATTACHMENTS:
1. 20260629 Sansom Agenda Package POs

REVIEWERS:
Donald Rose
James Barber

AGENDA ITEM SUMMARY SHEET

Print Page | Reset

Agenda of: 7 July 2026 (Date) Item No. _____

Submitted by: Procurement (Department) John Paine, Purchasing Agent (Department Head)

Sponsored by: Spiro N. Cheriogotis (Name) Mayor (Title)

Reviewed by: _____ (Executive Director)

Routing Authorized: James Barber (Mayor's Office) _____ (Date)

A brief synopsis and explanation of the following:

PROJECT NAME: Approval of Purchase Order to Sansom Equipment Co Inc

PURPOSE & SCOPE OF PROJECT:
To approve issuance of purchase order to Sansom Equipment Co Inc for one 2027 Kenworth L770 garbage truck with New Way 31 cu yd automated side-load body for Trash Dept . General fund.

RESOLUTION ☒ ORDINANCE ☐ OTHER ☐

AMOUNT OF CONTRACT: $398,360.00

FUNDING SOURCE:

Budget Item: See Requisition Discretionary Funds: _____

Budget amendment: REDUCE ☐ INCREASED ☐

Grant funds: _____ Matching funds: _____

Associated Costs:

Current year (itemize)
Type: _____ Amount: _____

Future years
Year: _____ Amount: _____

**If Cost will continue, write "indefinite" and list project annual cost.*

Effective date of contract: On issuance to vendor.

Renewal date of contract (if applicable): _____

If not bid, state reason: Sourcewell cooperative purchasing agreement, not on state contract.

How many bidders received bid packages (if applicable): na

How many bidders submitted bids (if applicable): na

If this is not the lowest bid, explain why not:

R E S O L U T I O N

Sponsored by: Mayor Spiro N. Cheriogotis

BE IT RESOLVED BY THE CITY COUNCIL OF MOBILE, ALABAMA, that the Purchasing Agent is authorized to execute, for and on behalf of the City of Mobile, a purchase order to the indicated vendor in the approximate amount stated, and to approve the supporting bid award if required, for the following requisition as indicated below and attached herein:

Requisition	Fiscal Year	Department	Description	Amount	Vendor
13774	2026	(2050) FLEET MANAGEMENT - GARAGE	ONE 2027 KENWORTH L770 GARBAGE TRUCK WITH NEW WAY 31 CU YARD AUTOMATED SIDE-LOAD BODY FOR TRASH DEPT (SOURCEWELL COOPERATIVE PURCHASING AGREEMENT, NOT ON STATE CONTRACT)	$398,360.00	(190715) SANSOM EQUIPMENT CO INC

Adopted:

_____
City Clerk

Bill To	Requisition 00013774-00 FY 2026
MUNICIPAL GARAGE ATTN: SEAN	
770 GAYLE STREET	Acct No:
	1000.40.20.2070.2070.2070.0000.0000.45040.
MOBILE, AL	Review:
36604	Buyer: 9105paij
SEAN.CLARK@CITYOFMOBILE.ORG	Status: Released Page 1

Vendor	Ship To
SANSOM EQUIPMENT CO INC	MOTOR POOL - ATTN: ADAM LYNN
2025 W I-65 SERVICE ROAD NORTH	770 GAYLE STREET
	MOBILE, AL 36604
MOBILE, AL 36618	AGEET@CITYOFMOBILE.GOV
Tel#205-401-4040	Delivery Reference
Fax 251-631-3768	TRAVESIA AGEE
	Deliver To
	MOTOR POOL - ATTN: ADAM LYNN
	770 GAYLE STREET
	MOBILE, AL 36604

Date Ordered	Vendor Number	Date Required	Ship Via	Terms	Department
06/10/26	190715				FLEET MANAGEMENT-GARAGE

LN	Description / Account	Qty	Unit Price	Net Price
001	KENWORTH ASL GARBAGE TRUCK AS FOLLOWS: 31 CUBIC YARD CAPACITY SEVERE DUTY REFUSE PACKAGE HINGED FRONT SPLASH GUARDS TROUGH CLEAN OUT TOOL HOPPER SUMP CLEAN OUT CHUTE EXTENSIONS-LH/RH RAKE TEETH BREAKER BAR HYDRAULIC HOPPER COVER HOPPER LADDER W/HANDLES BROOM/SHOVEL HOLDER BRACKET BODY PAINT-WHITE CAUTION SAFETY DECAL-LOWER TAILGATE LED WORK LIGHTS-ARM & HOPPER AREA LED BEACON STROBE LIGHT-TAILGATE CENTER MOUNT LED INTEGRATED STROB LIGHTS-FRONT BULKHEAD CORNERS, UPPER & LOWER TAILGATE CORNERS 7" MONITOR W/FOUR CAMERA SYSTEM-ARM, BLINDSPOT (LH), HOPPER & REARVIEW FRONT MOUNT TANDEM VANE HYDRAULIC PUMP OR HOT SHIFT PTO REMOTE GREASE ZERKS-TAILGATE HINGE & CYLINDER PINS FIRE EXTINGHUISHER-20LB. BODY MOUNT NEW KENWORTH L770 CAB OVER CHASSIS FREIGHT PRICING AS PER SOURCEWELL CONTRACT 110223-NWY AND SANSOM QUOTE SECQ9567 DATED 6-9-2026 Additional Description Notes ---	1.00 EACH	398360.00000	398360.00

Bill To	Requisition 00013774-00 FY 2026
MUNICIPAL GARAGE ATTN: SEAN	
770 GAYLE STREET	Acct No: 1000.40.20.2070.2070.2070.0000.0000.45040.
MOBILE, AL	Review:
36604	Buyer: 9105paij
SEAN.CLARK@CITYOFMOBILE.ORG	Status: Released Page 2

Vendor	Ship To
SANSOM EQUIPMENT CO INC	MOTOR POOL - ATTN: ADAM LYNN
2025 W I-65 SERVICE ROAD NORTH	770 GAYLE STREET
	MOBILE, AL 36604
MOBILE, AL 36618	AGEET@CITYOFMOBILE.GOV
Tel#205-401-4040	Delivery Reference
Fax 251-631-3768	TRAVESIA AGEE
	Deliver To
	MOTOR POOL - ATTN: ADAM LYNN
	770 GAYLE STREET
	MOBILE, AL 36604

Date Ordered	Vendor Number	Date Required	Ship Via	Terms	Department
06/10/26	190715				FLEET MANAGEMENT-GARAGE

LN	Description / Account	Qty	Unit Price	Net Price
	KENWORTH ASL GARBAGE TRUCK AS FOLLOWS:			
	31 CUBIC YARD CAPACITY			
	SEVERE DUTY REFUSE PACKAGE			
	HINGED FRONT SPLASH GUARDS			
	TROUGH CLEAN OUT TOOL			
	HOPPER SUMP CLEAN OUT CHUTE EXTENSIONS-LH/RH			
	RAKE TEETH BREAKER BAR			
	HYDRAULIC HOPPER COVER			
	HOPPER LADDER W/HANDLES			
	BROOM/SHOVEL HOLDER BRACKET			
	BODY PAINT-WHITE			
	CAUTION SAFETY DECAL-LOWER TAILGATE			
	LED WORK LIGHTS-ARM & HOPPER AREA			
	LED BEACON STROBE LIGHT-TAILGATE CENTER MOUNT			
	LED INTEGRATED STROB LIGHTS-FRONT			
	BULKHEAD CORNERS, UPPER & LOWER TAILGATE CORNERS			

Bill To	Requisition 00013774-00 FY 2026
MUNICIPAL GARAGE ATTN: SEAN	
770 GAYLE STREET	Acct No:
	1000.40.20.2070.2070.2070.0000.0000.45040.
MOBILE, AL	Review:
36604	Buyer: 9105paij
SEAN.CLARK@CITYOFMOBILE.ORG	Status: Released Page 3

Vendor	Ship To
SANSOM EQUIPMENT CO INC	MOTOR POOL - ATTN: ADAM LYNN
2025 W I-65 SERVICE ROAD NORTH	770 GAYLE STREET
	MOBILE, AL 36604
MOBILE, AL 36618	AGEET@CITYOFMOBILE.GOV
Tel#205-401-4040	Delivery Reference
Fax 251-631-3768	TRAVESIA AGEE
	Deliver To
	MOTOR POOL - ATTN: ADAM LYNN
	770 GAYLE STREET
	MOBILE, AL 36604

Date Ordered	Vendor Number	Date Required	Ship Via	Terms	Department
06/10/26	190715				FLEET MANAGEMENT-GARAGE

LN	Description / Account	Qty	Unit Price	Net Price
	7" MONITOR W/FOUR CAMERA SYSTEM-ARM, BLINDSPOT (LH), HOPPER & REARVIEW			
	FRONT MOUNT TANDEM VANE HYDRAULIC PUMP OR HOT SHIFT PTO			
	REMOTE GREASE ZERKS-TAILGATE HINGE & CYLINDER PINS			
	FIRE EXTINGHUISHER-20LB. BODY MOUNT			
	NEW KENWORTH L770 CAB OVER CHASSIS			
	FREIGHT			
	AS REQUESTED BY 2096-TRASH			
1	1000.40.20.2070.2070.2070.0000.0000.45040.			398360.00

Ship To
MOTOR POOL - ATTN: ADAM LYNN
770 GAYLE STREET
MOBILE, AL 36604
Delivery Reference
TRAVESIA AGEE

Deliver To
MOTOR POOL - ATTN: ADAM LYNN
770 GAYLE STREET
MOBILE, AL 36604

Requisition Link

Requisition Total 398360.00

Bill To	Requisition 00013774-00 FY 2026
MUNICIPAL GARAGE ATTN: SEAN	
770 GAYLE STREET	Acct No:
	1000.40.20.2070.2070.2070.0000.0000.45040.
MOBILE, AL	Review:
36604	Buyer: 9105paij
SEAN.CLARK@CITYOFMOBILE.ORG	Status: Released Page 4

Vendor	Ship To
SANSOM EQUIPMENT CO INC	MOTOR POOL - ATTN: ADAM LYNN
2025 W I-65 SERVICE ROAD NORTH	770 GAYLE STREET
	MOBILE, AL 36604
MOBILE, AL 36618	AGEET@CITYOFMOBILE.GOV
Tel#205-401-4040	Delivery Reference
Fax 251-631-3768	TRAVESIA AGEE
	Deliver To
	MOTOR POOL - ATTN: ADAM LYNN
	770 GAYLE STREET
	MOBILE, AL 36604

Date Ordered	Vendor Number	Date Required	Ship Via	Terms	Department
06/10/26	190715				FLEET MANAGEMENT-GARAGE

LN	Description / Account	Qty	Unit Price	Net Price

***** General Ledger Summary Section *****

Account	Amount	Remaining Budget
1000.40.20.2070.2070.2070.0000.0000.45040.	398360.00	1428769.01

PUBLIC SERVICES ADMINISTRATION FLEET VEHICLES

***** Approval/Conversion Info *****

Activity	Date	Clerk	Comment
Forward	06/10/26	MATTHEW ANDERSON	Automatic Forward to 910510856
Forward	06/10/26	MATTHEW ANDERSON	Automatic Forward to 910510856
Approved	06/10/26	DWIGHT D AUSTIN	
Approved	06/10/26	SHONNDA SMITH	Auto approved by: 910510856
Approved	06/10/26	CHERI BOUCHER	Auto approved by: 910510856
Approved	06/11/26	DWIGHT D AUSTIN	Auto approved by: 910518638
Approved	06/11/26	ASHLEY ADAMS	
Forward	06/11/26	MATTHEW ANDERSON	Automatic Forward to 910510856
Approved	06/11/26	DWIGHT D AUSTIN	Auto approved by: 910518244
Approved	06/11/26	SHONNDA SMITH	
Approved	06/11/26	CHERI BOUCHER	Auto approved by: 910518244
Queued	06/11/26	DONALD ROSE	Auto approved by: 910518244
Queued	06/11/26	SANDRA LEWIS	Auto approved by: 910518244
Queued	06/11/26	STEVEN KRONINGER	Auto approved by: 910518244
Queued	06/11/26	MARYLYN BUSCHELL	Auto approved by: 910518244
Queued	06/11/26	JAMES NEESE	Auto approved by: 910518244
Queued	06/11/26	PATRICIA KENNEDY-JONES	Auto approved by: 910518244
Queued	06/11/26	REBECCA CRUMPLER	Auto approved by: 910518244
Queued	06/11/26	ANNE FOLEY	Auto approved by: 910518244
Queued	06/11/26	JOHN PAINE	Auto approved by: 910518244

Bill To	Requisition 00013774-00 FY 2026
MUNICIPAL GARAGE ATTN: SEAN	
770 GAYLE STREET	Acct No:
	1000.40.20.2070.2070.2070.0000.0000.45040.
MOBILE, AL	Review:
36604	Buyer: 9105paij
SEAN.CLARK@CITYOFMOBILE.ORG	Status: Released Page 5

Vendor	Ship To
SANSOM EQUIPMENT CO INC	MOTOR POOL - ATTN: ADAM LYNN
2025 W I-65 SERVICE ROAD NORTH	770 GAYLE STREET
	MOBILE, AL 36604
MOBILE, AL 36618	AGEET@CITYOFMOBILE.GOV
Tel#205-401-4040	Delivery Reference
Fax 251-631-3768	TRAVESIA AGEE
	Deliver To
	MOTOR POOL - ATTN: ADAM LYNN
	770 GAYLE STREET
	MOBILE, AL 36604

Date Ordered	Vendor Number	Date Required	Ship Via	Terms	Department
06/10/26	190715				FLEET MANAGEMENT-GARAGE

LN	Description / Account	Qty	Unit Price	Net Price

Authorized By: _____ Date: _____
Signature

New Way

Refuse trucks

#110223-NWY
Maturity Date: 12/28/2027
Website: newwaytrucks.com/#sourcewell

Sourcewell Awarded Contract

Products & Services | Buy Sourcewell | Documents | Contact Information

Products & Services

Sourcewell contract 110223-NWY gives access to the following types of goods and services:

- Sidewinder XTR automated side loader (ASL)
- ROTO PAC auger-driven ASL
- Wolverine under-CDL capable ASL
- King Cobra rear loader (RL)
- Cobra Magnum RL
- Cobra High Compaction RL
- Cobra RL
- Viper RL
- Diamondback under-CDL RL
- Mammoth standard or lightweight front loaders
- Mamba Satellite sider loader
- New Way Trucks OEM parts

Find Your Distributor – New Way® Trucks
(nongovernment site)

Contact us

Have questions about a contract or cooperative purchasing?

Contact our dedicated team online or call 877-585-9706.

Buy Sourcewell

Login to unlock more contract features.

Username
Username

Password
Password

Log In

Forgot username or password?
Setup Buy Sourcewell access

Register for an account

Simply complete the online application, contact our dedicated team, or call 877-585-9706.

Search Suppliers & Contracts

General Contracts

IDIQ Contracts

Sourcewell's website may contain links to nongovernment websites being provided as a convenience and for informational purposes only. Sourcewell neither endorses nor guarantees, in any way, the external organization's services, advice, or products included in these website links. Sourcewell bears no responsibility for the accuracy, legality, or timeliness of any content on the external site or for that of subsequent links. All questions related to content on external sites should be addressed directly to the host of that particular website.

© 2023 Sourcewell. All rights reserved.

Scranton Manufacturing #110223-NWY

Pricing for contract #110223-NWY offers Sourcewell participating agencies the following discounts:

- 4% discount off retail/list price on all mobile refuse collection vehicle models and parts
- In addition, the New Way Distributor Network will offer a 1% - 5% discount on all Sourcewell orders, resulting in a total discount of 5% - 9% off MSRP
- Volume discounts may be considered on a case-by-case basis



FIND YOUR DISTRIBUTOR

LET'S GET TO IT

Whether you're in the U.S., Latin America, Canada or other locations around the world, New Way's industry-leading distributor network gives you the technical support, expert guidance and quality parts you need when you need 'em. Because we understand the sooner your trucks are back on the route, the sooner you're back in business.

ZIP, State or Province

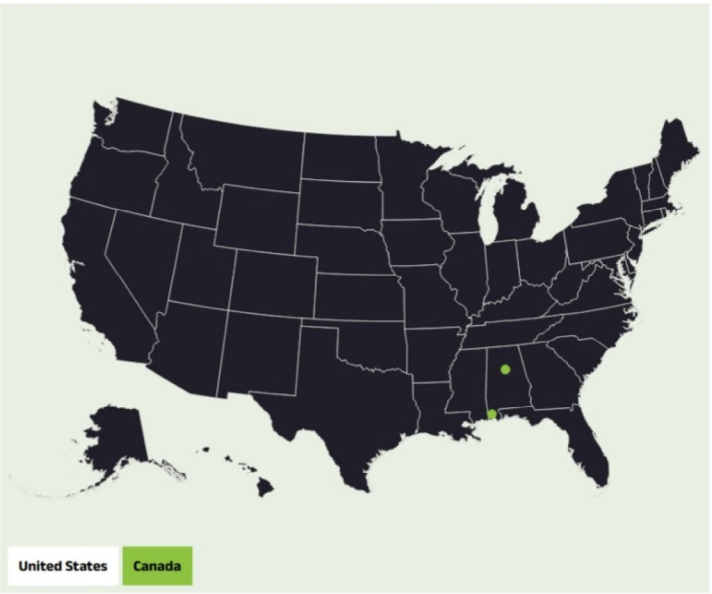

Results for: **Mississippi**

NEW WAY SALES MANAGER	DISTRIBUTOR	SERVICE AREA
Mike Cassotta	Sansom Equipment Co. 2025 West I-65 Service Road North, Mobile Alabama 36618 Website	Entire State / Province
Mike Cassotta	Sansom Equipment Co. 2800 Powell Avenue South, Birmingham Alabama 35233 Website	Entire State / Province

Location:
401 Adams Avenue, Suite 280
Montgomery, AL 36104-4338

Mailing Address:
P.O. Box 302251
Montgomery, AL 36130-2251
Telephone (334) 242-9200
Fax (334) 242-1775
www.examiners.alabama.gov

Rachel Laurie Riddle
Chief Examiner

December 23, 2025

Alabama County Commissions
Alabama Municipalities
City and County Boards of Education

To Whom It May Concern,

In accordance with Sections 16-13B-2(a)(13) and 41-16-51(a)(16), *Ala. Code* 1975 as amended by Act No. 2022-135, the Department has reviewed the competitive bidding process used by Sourcewell, a national, governmental purchasing cooperative, for the contracts awarded as of the date of this letter. The Department did not identify any matters that were contrary to proper purchasing procedures or routine governmental procurement practices. Each contract was awarded by Sourcewell pursuant to the competitive bid laws of the State of Minnesota.

Based on the Department's review, the competitive bid process used by Sourcewell is approved for use through **December 31, 2026**. This approval authorizes the purchase, lease, or lease/purchase of certain goods or services, other than voice or data wireless communication services, when certain statutory conditions are fulfilled. See Sections 16-13B-2(a)(13) and 41-16-51(a)(16), *Ala. Code* 1975 as amended by Act No. 2023-135.

Prior to utilizing Sourcewell, each governmental entity must verify that the goods or services to be purchased, leased, or lease/purchased are either not at the time available on the state purchasing program or are available at a price equal to or less than that on the state purchase program. *Id.* Any such purchases, leases, or lease/purchases must be made through a participating Alabama vendor holding an Alabama business license if such a vendor exists. *Id.* Any such vendor shall also comply with Section 41-16-51(a)(16)d, *Ala. Code* 1975 when applicable. Further, all such purchases must comply with the requirements of *Uniform Guidance*.

Should the Department receive notice that Sourcewell or its awarded vendors are allowing Alabama governmental entities to make unauthorized purchases or other unlawful business transactions, Sourcewell's competitive bid process approval will subject to immediate revocation by the Department.

Attention Counties and Municipalities:

Please be advised, this letter authorizes the purchase of materials or equipment that are otherwise part of a contract for "public works," as defined in Section 39-2-1(6), *Ala. Code*

1975, as long as the remaining portion of the public works project is subject to the requirements of Title 39, even if the remaining portion of the project would involve an amount less than $100,000 as a result of the exclusion of the purchase of the materials or equipment. See Section 39-2-2(m)(1) and (2), *Ala. Code* 1975, as amended by Act 2023-497.

If the Department can be of further assistance, please let us know.

Sincerely,

Rachel Laurie Riddle
CHIEF EXAMINER

RLR/lbm

CAPITAL CONTRACT SUMMARY SHEET

AGENDA ITEM SUMMARY SHEET

Agenda of: July 7, 2026

Submitted by:
John Paine, Purchasing Agent

Sponsored by:
Spiro Cheriogotis, INACTIVE

Purpose and Scope of Project:
To approve issuance of purchase order to Symtech Fire LLC for one fixed cargo container Flashover Simulator MFRD.

Amount of Contract:
$108,332.00

Funding Source
General fund

ATTACHMENTS:
1. 20260629 Symtech Agenda Package POs

REVIEWERS:
Donald Rose
James Barber

AGENDA ITEM SUMMARY SHEET

Print Page | Reset

Agenda of: 7 July 2026 (Date) Item No. _____

Submitted by: Procurement (Department) John Paine, Purchasing Agent (Department Head)

Sponsored by: Spiro N. Cheriogotis (Name) Mayor (Title)

Reviewed by: _____ (Executive Director)

Routing Authorized: James Barber (Mayor's Office) _____ (Date)

A brief synopsis and explanation of the following:

PROJECT NAME: Approval of Purchase Order to Symtech Fire LLC

PURPOSE & SCOPE OF PROJECT:
To approve issuance of purchase order to Symtech Fire LLC for one fixed cargo container Flashover Simulator MFRD.
General fund.

RESOLUTION ☒ ORDINANCE ☐ OTHER ☐

AMOUNT OF CONTRACT: $108,332.00

FUNDING SOURCE:

Budget Item: See Requisition Discretionary Funds: _____

Budget amendment: REDUCE ☐ INCREASED ☐

Grant funds: _____ Matching funds: _____

Associated Costs:

Current year (itemize)
Type: _____ Amount: _____

Future years
Year: _____ Amount: _____

**If Cost will continue, write "indefinite" and list project annual cost.*

Effective date of contract: On issuance to vendor.

Renewal date of contract (if applicable): _____

If not bid, state reason: Sourcewell cooperative purchasing agreement, not on state contract.

How many bidders received bid packages (if applicable): na

How many bidders submitted bids (if applicable): na

If this is not the lowest bid, explain why not:

R E S O L U T I O N

Sponsored by: Mayor Spiro N. Cheriogotis

BE IT RESOLVED BY THE CITY COUNCIL OF MOBILE, ALABAMA, that the Purchasing Agent is authorized to execute, for and on behalf of the City of Mobile, a purchase order to the indicated vendor in the approximate amount stated, and to approve the supporting bid award if required, for the following requisition as indicated below and attached herein:

Requisition	Fiscal Year	Department	Description	Amount	Vendor
13511	2026	(1510) FIRE ADMINISTRATION	ONE FIXED CARGO CONTAINER FLASHOVER SIMULATOR FOR MFRD (SOURCEWELL COOPERATIVE PURCHASING AGREEMENT, NOT ON STATE CONTRACT)	$108,332.00	(300404) SYMTECH FIRE LLC

Adopted:

_____

City Clerk

Bill To	Requisition 00013511-00 FY 2026
ACCOUNTS PAYABLE P O BOX 389 MOBILE, AL 36601 vendorinvoices@cityofmobile.org	Acct No: 1000.30.15.1510.1510.1510.0000.0000.49130. Review: Buyer: 910521901 Status: Approved Page 1

Vendor

Ship To
FIRE DRILL TOWER
860 OWENS STREET

MOBILE, AL 36606
RICHARDSONV@CITYOFMOBILE.GOV

Delivery Reference
VICTORIA RICHARDSON

Deliver To
FIRE DRILL TOWER
860 OWENS STREET

MOBILE, AL 36606
Delivery Reference
CHIEF WEAVER

Date Ordered	Vendor Number	Date Required	Ship Via	Terms	Department
06/05/26	00000				FIRE ADMINISTRATION

LN	Description / Account	Qty	Unit Price	Net Price
	General Notes ----------			
	AS PER YOUR QUOTE: ST705-SG DATED JUNE 4, 2026			
	SOURCEWELL CONTRACT #102325-SYM			
001	Flashover Simulator ST, SOURCEWELL CONTRACT #102325-SYM, AS DESCRIBED Upper Burn Module Burn Module Consisting of New (1-Way) 10’ Standard Height Cargo Container Marine/Industrial GradePaint (Red unless otherwise specified) Two rear cargo entry doors for loading solid fuel Insulation System: o High temperature 2,300° FCeramic insulation system o Tubular framing between insulation system and shipping container wall o Inner Wall Lining –reinforced with robust steel o Outer Wall Lining –3/16” thick steel plate system on walls and ceiling o Cargo Doors Lining –3/16” thick steel plate system o Flooring –3/16” Steel plate system covered with pavers Burn Material Support System o Tubular steelplus C-channel, supports 4’ x 8’ sheets o Tubular	1.00 EACH	91916.00000	91916.00

Bill To	Requisition 00013511-00 FY 2026
ACCOUNTS PAYABLE P O BOX 389 MOBILE, AL 36601 vendorinvoices@cityofmobile.org	Acct No: 1000.30.15.1510.1510.1510.0000.0000.49130. Review: Buyer: 910521901 Status: Approved Page 2

Vendor

Ship To
FIRE DRILL TOWER
860 OWENS STREET

MOBILE, AL 36606
RICHARDSONV@CITYOFMOBILE.GOV

Delivery Reference
VICTORIA RICHARDSON

Deliver To
FIRE DRILL TOWER
860 OWENS STREET

MOBILE, AL 36606
Delivery Reference
CHIEF WEAVER

Date Ordered	Vendor Number	Date Required	Ship Via	Terms	Department
06/05/26	00000				FIRE ADMINISTRATION

LN	Description / Account	Qty	Unit Price	Net Price
	steelplus C-channel, supports 4’ x 4’ sheets on cargo doors o Safety chains to secure and tighten down burn material o Tubular steel plus C-channel at top as well Burn Crib o Robust steel material loading crib Water Drainage System o Drainage of water to the exterior o Flooring designed to prevent pooling of water to ensure drainage of the unit after operation. Exterior Platform o Robust steel platform system o Removable OSHA compliant stairway railings and landing system Stair Treads –36” wide surface non-skid surface Stair Risers –7” high maximum and 11” minimum tread depth Railings –1-1/2” x 1-1/2” x 12-gauge square tubing o Removable 6’ x 8’loading platform Lower Observation Module Observation Module Consisting of New (1-Way) 20’ Standard Height Cargo Container Marine/Industrial GradePaint (Red unless otherwise specified) Doors –2 means of egress one per side o Robust steel, non-locking, spring loaded and insulated o Outward door opening trajectory Insulation System o			

Bill To	Requisition 00013511-00 FY 2026
ACCOUNTS PAYABLE P O BOX 389 MOBILE, AL 36601 vendorinvoices@cityofmobile.org	Acct No: 1000.30.15.1510.1510.1510.0000.0000.49130. Review: Buyer: 910521901 Status: Approved Page 3

Vendor

Ship To
FIRE DRILL TOWER
860 OWENS STREET

MOBILE, AL 36606
RICHARDSONV@CITYOFMOBILE.GOV

Delivery Reference
VICTORIA RICHARDSON

Deliver To
FIRE DRILL TOWER
860 OWENS STREET

MOBILE, AL 36606
Delivery Reference
CHIEF WEAVER

Date Ordered	Vendor Number	Date Required	Ship Via	Terms	Department
06/05/26	00000				FIRE ADMINISTRATION

LN	Description / Account	Qty	Unit Price	Net Price
	High temperature 2300° F Ceramicinsulation system o Tubular framing between insulation system and shipping container wall o Inner Wall Lining –reinforced with robust steel o Outer Wall Lining –3/16” thick steel plate system Sides -5’ feet down Ceiling -10’ feet o Flooring –1/8” Steel plate system Interior Baffle o Robust steelswing away baffle system Exterior Roof Vent o Robust steel mechanically operated roof vent capable of locking during chamber operation and transport Trench Vent (for cold smoke removal and faster build up of rollover simulations) Water Drainage System o Drainage of water to the exterior o Flooring designed to prevent pooling of water to ensure drainage of the unit after operation. Code/Safety Compliance NFPA 1402 Standard on Facilities for Fire Training and Associated Props –2019 edition U.S. Department of Transportation (DOT) Occupational Safety and Health Administration (OSHA) On-Site Assembly Modules fully welded together for longevity and			

Bill To	Requisition 00013511-00 FY 2026
ACCOUNTS PAYABLE P O BOX 389 MOBILE, AL 36601 vendorinvoices@cityofmobile.org	Acct No: 1000.30.15.1510.1510.1510.0000.0000.49130. Review: Buyer: 910521901 Status: Approved Page 4

Vendor

Ship To
FIRE DRILL TOWER
860 OWENS STREET

MOBILE, AL 36606
RICHARDSONV@CITYOFMOBILE.GOV

Delivery Reference
VICTORIA RICHARDSON

Deliver To
FIRE DRILL TOWER
860 OWENS STREET

MOBILE, AL 36606
Delivery Reference
CHIEF WEAVER

Date Ordered	Vendor Number	Date Required	Ship Via	Terms	Department
06/05/26	00000				FIRE ADMINISTRATION

LN	Description / Account	Qty	Unit Price	Net Price
	air/fuel control Training OneDay Training Program with NFPA-Certified Instructor Warranty & Support 1-Year Warranty. Excludes expected deformation from normal expansion and contraction Unlimited Technical Phone Support for the Life of the Product			
1	6120.70.15.0000.0000.1510.0000.0000.49130.			50000.00
2	1000.30.15.1510.1510.1510.0000.0000.49130.			41916.00
	Ship To FIRE CENTRAL SUPPLY 2851 OLD SHELL ROAD MOBILE, AL 36607 Delivery Reference VICTORIA RICHARDSON Deliver To FIRE CENTRAL SUPPLY 2851 OLD SHELL ROAD MOBILE, AL 36607			
002	Flashover Simulator ST, SOURCEWELL CONTRACT #102325-SYM, OPTION AS DESCRIBED: Option: Add ST-PRO Air Induction Vent (Fresh Air Intake) and Observation Room Pavers	1.00 EACH	3278.00000	3278.00

Bill To	Requisition 00013511-00 FY 2026
ACCOUNTS PAYABLE P O BOX 389 MOBILE, AL 36601 vendorinvoices@cityofmobile.org	Acct No: 1000.30.15.1510.1510.1510.0000.0000.49130. Review: Buyer: 910521901 Status: Approved Page 5

Vendor

Ship To
FIRE DRILL TOWER
860 OWENS STREET

MOBILE, AL 36606
RICHARDSONV@CITYOFMOBILE.GOV

Delivery Reference
VICTORIA RICHARDSON

Deliver To
FIRE DRILL TOWER
860 OWENS STREET

MOBILE, AL 36606
Delivery Reference
CHIEF WEAVER

Date Ordered	Vendor Number	Date Required	Ship Via	Terms	Department
06/05/26	00000				FIRE ADMINISTRATION

LN	Description / Account	Qty	Unit Price	Net Price
1	1000.30.15.1510.1510.1510.0000.0000.49130.			3278.00

Ship To
FIRE CENTRAL SUPPLY
2851 OLD SHELL ROAD
MOBILE, AL 36607
Delivery Reference
VICTORIA RICHARDSON

Deliver To
FIRE CENTRAL SUPPLY
2851 OLD SHELL ROAD
MOBILE, AL 36607

003	Flashover Simulator ST, SOURCEWELL CONTRACT #102325-SYM, OPTION AS DESCRIBED: Option: Upgrade to 8’x8’ Loading Platform	1.00 EACH	2971.00000	2971.00
1	1000.30.15.1510.1510.1510.0000.0000.49130.			2971.00

Ship To
FIRE CENTRAL SUPPLY
2851 OLD SHELL ROAD
MOBILE, AL 36607
Delivery Reference
VICTORIA RICHARDSON

Deliver To
FIRE CENTRAL SUPPLY

Bill To	Requisition 00013511-00 FY 2026
ACCOUNTS PAYABLE P O BOX 389 MOBILE, AL 36601 vendorinvoices@cityofmobile.org	Acct No: 1000.30.15.1510.1510.1510.0000.0000.49130. Review: Buyer: 910521901 Status: Approved Page 6

Vendor

Ship To
FIRE DRILL TOWER
860 OWENS STREET

MOBILE, AL 36606
RICHARDSONV@CITYOFMOBILE.GOV

Delivery Reference
VICTORIA RICHARDSON

Deliver To
FIRE DRILL TOWER
860 OWENS STREET

MOBILE, AL 36606
Delivery Reference
CHIEF WEAVER

Date Ordered	Vendor Number	Date Required	Ship Via	Terms	Department
06/05/26	00000				FIRE ADMINISTRATION

LN	Description / Account	Qty	Unit Price	Net Price
	860 OWENS STREET MOBILE, AL 36606			
004	Flashover Simulator ST, SOURCEWELL CONTRACT #102325-SYM, OPTION AS DESCRIBED: Option: Add 2ndStaircase to Loading Platform (1 Centered, 1 at Side)	1.00 EACH	849.00000	849.00
	1 1000.30.15.1510.1510.1510.0000.0000.49130.			849.00
	Ship To FIRE CENTRAL SUPPLY 2851 OLD SHELL ROAD MOBILE, AL 36607 Delivery Reference VICTORIA RICHARDSON Deliver To FIRE CENTRAL SUPPLY 2851 OLD SHELL ROAD MOBILE, AL 36607			
005	Flashover Simulator ST, SOURCEWELL CONTRACT #102325-SYM, OPTION AS DESCRIBED: Option: Upgrade Observation Chamber to 30-ft	1.00 EACH	5198.00000	5198.00
	1 1000.30.15.1510.1510.1510.0000.0000.49130.			5198.00

Bill To	Requisition 00013511-00 FY 2026
ACCOUNTS PAYABLE P O BOX 389 MOBILE, AL 36601 vendorinvoices@cityofmobile.org	Acct No: 1000.30.15.1510.1510.1510.0000.0000.49130. Review: Buyer: 910521901 Status: Approved Page 7

Vendor

Ship To
FIRE DRILL TOWER
860 OWENS STREET

MOBILE, AL 36606
RICHARDSONV@CITYOFMOBILE.GOV

Delivery Reference
VICTORIA RICHARDSON

Deliver To
FIRE DRILL TOWER
860 OWENS STREET

MOBILE, AL 36606
Delivery Reference
CHIEF WEAVER

Date Ordered	Vendor Number	Date Required	Ship Via	Terms	Department
06/05/26	00000				FIRE ADMINISTRATION

LN	Description / Account	Qty	Unit Price	Net Price
	Ship To FIRE CENTRAL SUPPLY 2851 OLD SHELL ROAD MOBILE, AL 36607 Delivery Reference VICTORIA RICHARDSON Deliver To FIRE CENTRAL SUPPLY 2851 OLD SHELL ROAD MOBILE, AL 36607			
006	FREIGHT	1.00 EACH	4120.00000	4120.00
	Vendor Item Inventory Item/Loc 14009			
1	1000.30.15.1510.1510.1510.0000.0000.49130.			4120.00
	Ship To FIRE CENTRAL SUPPLY 2851 OLD SHELL ROAD MOBILE, AL 36607 Delivery Reference VICTORIA RICHARDSON Deliver To FIRE CENTRAL SUPPLY 2851 OLD SHELL ROAD			

Bill To	Requisition 00013511-00 FY 2026
ACCOUNTS PAYABLE P O BOX 389 MOBILE, AL 36601 vendorinvoices@cityofmobile.org	Acct No: 1000.30.15.1510.1510.1510.0000.0000.49130. Review: Buyer: 910521901 Status: Approved Page 8

Vendor

Ship To
FIRE DRILL TOWER
860 OWENS STREET

MOBILE, AL 36606
RICHARDSONV@CITYOFMOBILE.GOV

Delivery Reference
VICTORIA RICHARDSON

Deliver To
FIRE DRILL TOWER
860 OWENS STREET

MOBILE, AL 36606
Delivery Reference
CHIEF WEAVER

Date Ordered	Vendor Number	Date Required	Ship Via	Terms	Department
06/05/26	00000				FIRE ADMINISTRATION

LN	Description / Account	Qty	Unit Price	Net Price
	MOBILE, AL 36606			

Requisition Link

Requisition Total 108332.00

***** General Ledger Summary Section *****

Account		Amount	Remaining Budget
1000.30.15.1510.1510.1510.0000.0000.49130.		58332.00	1267694.88
FIRE ADMINISTRATION EXP	UNCLASSIFIED EXPENDITURES		
6120.70.15.0000.0000.1510.0000.0000.49130.		50000.00	1267694.88
EMERGENCY MEDICAL SVCS EXP	UNCLASSIFIED EXPENDITURES		

***** Approval/Conversion Info *****

Activity	Date	Clerk	Comment
Approved	06/29/26	DONALD ROSE	Auto approved by: 910521901
Approved	06/29/26	SANDRA LEWIS	Auto approved by: 910521901
Approved	06/29/26	STEVEN KRONINGER	Auto approved by: 910521901
Approved	06/29/26	SAMANTHA COOLEY	Auto approved by: 910521901
Approved	06/29/26	MARYLYN BUSCHELL	Auto approved by: 910521901
Approved	06/29/26	JAMES NEESE	Auto approved by: 910521901
Approved	06/29/26	PATRICIA KENNEDY-JONES	
Approved	06/29/26	REBECCA CRUMPLER	Auto approved by: 910521901
Approved	06/29/26	ANNE FOLEY	Auto approved by: 910521901
Approved	06/29/26	JOHN PAINE	Auto approved by: 910521901

Authorized By: _____ Date: _____
Signature

Symtech Fire

Live fire training facilities and simulators

#102325-SYM
Maturity Date: 2/13/2030
Website: symtechfire.com/how-to-buy/

Sourcewell Awarded Contract

Products & Services | Buy Sourcewell | Documents | Contact Information

Products & Services

Sourcewell contract 102325-SYM gives access to the following types of goods and services:

- Fire training towers/burn buildings
- Drill towers
- Thermal lining systems
- Flashover/fire behavior simulators
- Interior/structural gas fired props
- Outdoor/industrial gas fired props
- Firefighter skills training units
- Mobile fire simulators
- NFPA 1402 inspections
- NFPA 1403 training programs
- Fire training facility design
- Fire training prop service/maintenance

Contact us

Have questions about a contract or cooperative purchasing?

Contact our dedicated team online or call 877-585-9706.

Buy Sourcewell

Login to unlock more contract features.

Username
Username

Password
Password

Log In

Forgot username or password?
Setup Buy Sourcewell access

Register for an account

Simply complete the online application, contact our dedicated team, or call 877-585-9706.

Search Suppliers & Contracts

General Contracts

IDIQ Contracts

Sourcewell's website may contain links to nongovernment websites being provided as a convenience and for informational purposes only. Sourcewell neither endorses nor guarantees, in any way, the external organization's services, advice, or products included in these website links. Sourcewell bears no responsibility for the accuracy, legality, or timeliness of any content on the external site or for that of subsequent links. All questions related to content on external sites should be addressed directly to the host of that particular website.

Sourcewell is a local unit of government under Minnesota state statute, and competitively solicits and awards contracts. Purchasing agencies are responsible for performing due diligence and ensuring compliance with applicable federal, state, and local laws, as well as specific funding requirements, in consultation with legal counsel.

©2026 Sourcewell. All rights reserved.

Symtech Fire #102325-SYM

Pricing for contract #102325-SYM offers Sourcewell participating agencies the following discount:

- 16.67% discount off list price

Location:
401 Adams Avenue, Suite 280
Montgomery, AL 36104-4338

Mailing Address:
P.O. Box 302251
Montgomery, AL 36130-2251
Telephone (334) 242-9200
Fax (334) 242-1775
www.examiners.alabama.gov

Rachel Laurie Riddle
Chief Examiner

December 23, 2025

Alabama County Commissions
Alabama Municipalities
City and County Boards of Education

To Whom It May Concern,

In accordance with Sections 16-13B-2(a)(13) and 41-16-51(a)(16), *Ala. Code* 1975 as amended by Act No. 2022-135, the Department has reviewed the competitive bidding process used by Sourcewell, a national, governmental purchasing cooperative, for the contracts awarded as of the date of this letter. The Department did not identify any matters that were contrary to proper purchasing procedures or routine governmental procurement practices. Each contract was awarded by Sourcewell pursuant to the competitive bid laws of the State of Minnesota.

Based on the Department's review, the competitive bid process used by Sourcewell is approved for use through **December 31, 2026**. This approval authorizes the purchase, lease, or lease/purchase of certain goods or services, other than voice or data wireless communication services, when certain statutory conditions are fulfilled. See Sections 16-13B-2(a)(13) and 41-16-51(a)(16), *Ala. Code* 1975 as amended by Act No. 2023-135.

Prior to utilizing Sourcewell, each governmental entity must verify that the goods or services to be purchased, leased, or lease/purchased are either not at the time available on the state purchasing program or are available at a price equal to or less than that on the state purchase program. *Id.* Any such purchases, leases, or lease/purchases must be made through a participating Alabama vendor holding an Alabama business license if such a vendor exists. *Id.* Any such vendor shall also comply with Section 41-16-51(a)(16)d, *Ala. Code* 1975 when applicable. Further, all such purchases must comply with the requirements of *Uniform Guidance*.

Should the Department receive notice that Sourcewell or its awarded vendors are allowing Alabama governmental entities to make unauthorized purchases or other unlawful business transactions, Sourcewell's competitive bid process approval will subject to immediate revocation by the Department.

Attention Counties and Municipalities:

Please be advised, this letter authorizes the purchase of materials or equipment that are otherwise part of a contract for "public works," as defined in Section 39-2-1(6), *Ala. Code*

1975, as long as the remaining portion of the public works project is subject to the requirements of Title 39, even if the remaining portion of the project would involve an amount less than $100,000 as a result of the exclusion of the purchase of the materials or equipment. See Section 39-2-2(m)(1) and (2), *Ala. Code* 1975, as amended by Act 2023-497.

If the Department can be of further assistance, please let us know.

Sincerely,

Rachel Laurie Riddle
CHIEF EXAMINER

RLR/lbm



CAPITAL CONTRACT SUMMARY SHEET

AGENDA ITEM SUMMARY SHEET

Agenda of: July 7, 2026

Submitted by:
John Paine, Purchasing Agent

Sponsored by:
Spiro Cheriogotis, INACTIVE

Purpose and Scope of Project:
To approve issuance of purchase order to Ward International Trucks LLC for two 2027 Freightliner M2-106 crew cab trucks with dump body for Stormwater Dept .

Amount of Contract:
$253,222.00

Funding Source
General fund

ATTACHMENTS:
1. 20260629 Ward Agenda Package POs

REVIEWERS:
Donald Rose
James Barber

AGENDA ITEM SUMMARY SHEET

Print Page | Reset

Agenda of: 7 July 2026 (Date) Item No. _____

Submitted by: Procurement (Department) John Paine, Purchasing Agent (Department Head)

Sponsored by: Spiro N. Cheriogotis (Name) Mayor (Title)

Reviewed by: _____ (Executive Director)

Routing Authorized: James Barber (Mayor's Office) _____ (Date)

A brief synopsis and explanation of the following:

PROJECT NAME: Approval of Purchase Order to Ward International Trucks LLC

PURPOSE & SCOPE OF PROJECT:
To approve issuance of purchase order to Ward International Trucks LLC for two 2027 Freightliner M2-106 crew cab trucks with dump body for Stormwater Dept .
General fund.

RESOLUTION ☒ ORDINANCE ☐ OTHER ☐

AMOUNT OF CONTRACT: $253,222.00

FUNDING SOURCE:

Budget Item: See Requisition Discretionary Funds: _____

Budget amendment: REDUCE ☐ INCREASED ☐

Grant funds: _____ Matching funds: _____

Associated Costs:

Current year (itemize)
Type: _____ Amount: _____

Future years
Year: _____ Amount: _____

**If Cost will continue, write "indefinite" and list project annual cost.*

Effective date of contract: On issuance to vendor.

Renewal date of contract (if applicable): _____

If not bid, state reason: Seald bid 6052

How many bidders received bid packages (if applicable): 25 + web

How many bidders submitted bids (if applicable): 3

If this is not the lowest bid, explain why not:

_____

_____

R E S O L U T I O N

Sponsored by: Mayor Spiro N. Cheriogotis

BE IT RESOLVED BY THE CITY COUNCIL OF MOBILE, ALABAMA, that the Purchasing Agent is authorized to execute, for and on behalf of the City of Mobile, a purchase order to the indicated vendor in the approximate amount stated, and to approve the supporting bid award if required, for the following requisition as indicated below and attached herein:

Requisition	Fiscal Year	Department	Description	Amount	Vendor
12205	2026	(2050) FLEET MANAGEMENT - GARAGE	TWO FREIGHTLINER M2-106 CREW CAB TRUCKS WITH DUMP BODIES FOR STORMWATER DEPT (SEALED BID 6052)	$253,222.00	(232872) WARD INTERNATIONAL TRUCKS LLC

Adopted:

_____

City Clerk

Bill To	Requisition 00012205-00 FY 2026
MUNICIPAL GARAGE ATTN: SEAN 770 GAYLE STREET MOBILE, AL 36604 SEAN.CLARK@CITYOFMOBILE.ORG	Acct No: 1000.40.20.2070.2070.2070.0000.0000.45040. Review: Buyer: 9105paij Status: Approved Page 1

Vendor	Ship To
WARD INTERNATIONAL TRUCKS LLC P O BOX 50375 MOBILE, AL 36605 Tel#251-433-5616 Fax 251-433-5617	MOTOR POOL - ATTN: ADAM LYNN 770 GAYLE STREET MOBILE, AL 36604 AGEET@CITYOFMOBILE.GOV Delivery Reference TRAVESIA AGEE Deliver To MUNICIPAL GARAGE ATTN: SEAN 770 GAYLE STREET MOBILE, AL 36604

Date Ordered	Vendor Number	Date Required	Ship Via	Terms	Department
05/07/26	232872				FLEET MANAGEMENT-GARAGE

LN	Description / Account	Qty	Unit Price	Net Price
001	TRUCK CREW CAB 33,000 GVW WITH HYDRAULIC CONTRACTOR DUMP BODY CONTRACTOR BED: 12'DRW 1/8" DIAMOND PLATE STEEL FLOOR 3" CHANNEL CROSS MEMBERS 6" CHANNEL LONGBEAMS SET AT 34" WIDE FULL LENGTH FOLD-DOWN SIDES & REAR GATE 3"x4" TUBE BULKHEAD W/STOP, TAIL, TURN & REVERSE LIGHTS BUILD BULKHEAD TO FIT MACK MD7 NO GN HITCH WITH THIS LENGTH BED SINGLE 7-WAY TRAILER PLUG LED LIGHTS UNDERCOATED POWDER COATED BLACK GLOSS BLACK STEEL UNDERBODY TRUCK TOOL BOX W/ALUMINUM DOOR 18"x18"x48" POWDER COATED DIAMOND TREAD ALUMINUM DOOR ADDS A HIGH LEVEL OF CORROSION RESISTANCE TO THE PART OF THE BOX THAT IS MOST EXPOSED. BLACK POWDER COATING HELPS KEEP THE BOX CORROSION-RESISTANT. GUARD AGAINST THEFT W/LOCKING, DIE-CAST COMPRESSION LATCH. BUILT FOR LONG LIFE W/AIRCRAFT-GRADE CABLES AND A REPLACEABLE GASKET SEALING SYSTEM MADE IN THE USA 18x18 INCH WELDED BLACK STRUCTURAL STEEL MOUNTING BRACKETS 30 TON HEAVY DUTY SWIVEL TYPE PINTLE HOOK ALLOWS TOWING	2.00 EACH	126611.00000	253222.00

Bill To	Requisition 00012205-00 FY 2026
MUNICIPAL GARAGE ATTN: SEAN	
770 GAYLE STREET	Acct No:
	1000.40.20.2070.2070.2070.0000.0000.45040.
MOBILE, AL	Review:
36604	Buyer: 9105paij
SEAN.CLARK@CITYOFMOBILE.ORG	Status: Approved Page 2

Vendor	Ship To
WARD INTERNATIONAL TRUCKS LLC	MOTOR POOL - ATTN: ADAM LYNN
P O BOX 50375	770 GAYLE STREET
	MOBILE, AL 36604
MOBILE, AL 36605	AGEET@CITYOFMOBILE.GOV
Tel#251-433-5616	Delivery Reference
Fax 251-433-5617	TRAVESIA AGEE
	Deliver To
	MUNICIPAL GARAGE ATTN: SEAN
	770 GAYLE STREET
	MOBILE, AL 36604

Date Ordered	Vendor Number	Date Required	Ship Via	Terms	Department
05/07/26	232872				FLEET MANAGEMENT-GARAGE

LN	Description / Account	Qty	Unit Price	Net Price
	HEAVY EQUIPMENT OVER UNEVEN TERRAIN STRONG FORGED STEEL CONSTRUCTION SPRING-LOADED PINTLE HOOK LOCK ARM PROVIDES A SECURE HOLD ONTO 3IN I.D LUNETTE EYES AND DRAWBARS HAULS UP TO 60,000 LBS. 7-WAY TRAILER PLUG, TRUCK-SIDE 7-WAY ROUND DURABLE NYLON PLASTIC CONSTRUCTION BUILT IN SAFETY LATCH ASSURES A SECURE CONNECTION SPRING-LOADED DOOR PROTECTS TERMINALS WHEN NOT IN USE. MISC. VALVES, FITTINGS, HOSES, GLADHANDS TO INSTALL THE TRACTOR PACKAGE, AND STEEL TO FABRICATE HITCH PLATE. INSTALL PRO CONTRACTOR BODY ON TRUCK, WELD MOUNTING BRACKET TO BODY & BOLT TO TRUCK FRAME (CENTER MOUNTING PLATE AS CLOSE TO CENTER OF REAR AXLE AS POSSIBLE), WIRE LIGHTS, TEST LIGHTS AND TRAILER PLUG CONNECTION MARK FRAME, DRILL HOLES FOR TOOLBOX MOUNTS, INSTALL MOUNTS, MARK TOOLBOX, DRILL HOLES TO ALIGN W/TOOLBOX MOUNTS, MOUNT TOOLBOX, ADJUST STRIKER TO ENSURE BOX IS WATER TIGHT LAYOUT AND FABRICATE 1" HITCH PLATE, MAG-DRILL HOLES FOR PINTLE HITCH, LIGHTS PAINT ALL AREAS AFFECTED BY INSTALL INSTALL TRACTOR PACKAGE			

Bill To	Requisition 00012205-00 FY 2026
MUNICIPAL GARAGE ATTN: SEAN	
770 GAYLE STREET	Acct No: 1000.40.20.2070.2070.2070.0000.0000.45040.
MOBILE, AL	Review:
36604	Buyer: 9105paij
SEAN.CLARK@CITYOFMOBILE.ORG	Status: Approved Page 3

Vendor	Ship To
WARD INTERNATIONAL TRUCKS LLC	MOTOR POOL - ATTN: ADAM LYNN
P O BOX 50375	770 GAYLE STREET
	MOBILE, AL 36604
MOBILE, AL 36605	AGEET@CITYOFMOBILE.GOV
Tel#251-433-5616	Delivery Reference
Fax 251-433-5617	TRAVESIA AGEE
	Deliver To
	MUNICIPAL GARAGE ATTN: SEAN
	770 GAYLE STREET
	MOBILE, AL 36604

Date Ordered	Vendor Number	Date Required	Ship Via	Terms	Department
05/07/26	232872				FLEET MANAGEMENT-GARAGE

LN	Description / Account	Qty	Unit Price	Net Price
	ONTO TRUCK, ROUTE AIR LINES TO REAR OF TRUCK, PLUMB AIR LINES, INSTALL GLADHANDS VENDOR TO DELIVER 2027 INTERNATIONAL MV607 CHASSIS WITH KNAPHEIDE GCDH-120B-P CONTRACTOR HYDRAULIC DUMP BODY AND PINTLE TRAILER HITCH AS PER CITY OF MOBILE BID # 6052 AND YOUR QUOTE			
	Additional Description Notes			

	TRUCK CREW CAB 33,000 GVW WITH HYDRAULIC CI=ONTRACTOR DUMP BODY			
	PRO-CONTRACTOR BED:			
	12'DRW			
	1/8" DIAMOND PLATE STEEL FLOOR			
	3" CHANNEL CROSS MEMBERS			
	6" CHANNEL LONGBEAMS SET AT 34" WIDE			
	FULL LENGTH FOLD-DOWN SIDES & REAR GATE			
	3"x4" TUBE BULKHEAD W/STOP, TAIL,TURN & REVERSE LIGHTS			
	BUILD BULKHEAD TO FIT MACK MD7			
	NO GN HITCH WITH THIS LENGTH BED			
	SINGLE 7-WAY TRAILER PLUG			
	LED LIGHTS			
	UNDERCOATED			
	POWDER COATED BLACK			
	GLOSS BLACK STEEL UNDERBODY TRUCK TOOL BOX W/ALUMINUM DOOR 18"x18"x48"			
	POWDER COATED DIAMOND TREAD ALUMINUM DOOR ADDS A HIGH LEVEL OF CORROSION RESISTANCE TO THE PART OF THE BOX THAT IS MOST EXPOSED.			

Bill To	Requisition 00012205-00 FY 2026
MUNICIPAL GARAGE ATTN: SEAN	
770 GAYLE STREET	Acct No: 1000.40.20.2070.2070.2070.0000.0000.45040.
MOBILE, AL	Review:
36604	Buyer: 9105paij
SEAN.CLARK@CITYOFMOBILE.ORG	Status: Approved Page 4

Vendor	Ship To
WARD INTERNATIONAL TRUCKS LLC	MOTOR POOL - ATTN: ADAM LYNN
P O BOX 50375	770 GAYLE STREET
	MOBILE, AL 36604
MOBILE, AL 36605	AGEET@CITYOFMOBILE.GOV
Tel#251-433-5616	Delivery Reference
Fax 251-433-5617	TRAVESIA AGEE
	Deliver To
	MUNICIPAL GARAGE ATTN: SEAN
	770 GAYLE STREET
	MOBILE, AL 36604

Date Ordered	Vendor Number	Date Required	Ship Via	Terms	Department
05/07/26	232872				FLEET MANAGEMENT-GARAGE

LN	Description / Account	Qty	Unit Price	Net Price
	BLACK POWDER COATING HELPS KEEP THE BOX CORROSION-RESISTANT. GUARD AGAINST THEFT W/LOCKING, DIE-CAST COMPRESSION LATCH. BUILT FOR LONG LIFE W/AIRCRAFT-GRADE CABLES AND A REPLACEABLE GASKET SEALING SYSTEM MADE IN THE USA 18x18 INCH WELDED BLACK STRUCTURAL STEEL MOUNTING BRACKETS 30 TON HEAVY DUTY SWIVEL TYPE PINTLE HOOK ALLOWS TOWING HEAVY EQUIPMENT OVER UNEVEN TERRAIN STRONG FORGED STEEL CONSTRUCTION SPRING-LOADED PINTLE HOOK LOCK ARM PROVIDES A SECURE HOLD ONTO 3IN I.D LUNETTE EYES AND DRAWBARS HAULS UP TO 60,000 LBS. 7-WAY TRAILER PLUG, TRUCK-SIDE 7-WAY ROUND DURABLE NYLON PLASTIC CONSTRUCTION BUILT IN SAFETY LATCH ASSURES A SECURE CONNECTION SPRING-LOADED DOOR PROTECTS TERMINALS WHEN NOT IN USE. MISC. VALVES, FITTINGS, HOSES, GLADHANDS TO INSTALL THE TRACTOR PACKAGE, AND STEEL TO FABRICATE HITCH PLATE. INSTALL PRO CONTRACTOR BODY ON TRUCK, WELD MOUNTING BRACKET TO BODY & BOLT TO TRUCK FRAME (CENTER MOUNTING PLATE AS CLOSE TO CENTER OF REAR AXLE AS POSSIBLE), WIRE LIGHTS, TEST LIGHTS AND TRAILER PLUG CONNECTION MARK FRAME, DRILL HOLES FOR TOOLBOX MOUNTS, INSTALL MOUNTS, MARK TOOLBOX, DRILL HOLES TO ALIGN W/TOOLBOX MOUNTS, MOUNT TOOLBOX, ADJUST STRIKER TO ENSURE BOX IS WATER TIGHT LAYOUT AND FABRICATE 1" HITCH PLATE, MAG-DRILL HOLES FOR PINTLE HITCH, LIGHTS PAINT ALL AREAS AFFECTED BY INSTALL INSTALL TRACTOR PACKAGE ONTO TRUCK, ROUTE AIR LINES TO REAR OF TRUCK, PLUMB AIR LINES, INSTALL GLADHANDS			

Bill To	Requisition 00012205-00 FY 2026
MUNICIPAL GARAGE ATTN: SEAN	
770 GAYLE STREET	Acct No:
	1000.40.20.2070.2070.2070.0000.0000.45040.
MOBILE, AL	Review:
36604	Buyer: 9105paij
SEAN.CLARK@CITYOFMOBILE.ORG	Status: Approved Page 5

Vendor	Ship To
WARD INTERNATIONAL TRUCKS LLC	MOTOR POOL - ATTN: ADAM LYNN
P O BOX 50375	770 GAYLE STREET
	MOBILE, AL 36604
MOBILE, AL 36605	AGEET@CITYOFMOBILE.GOV
Tel#251-433-5616	Delivery Reference
Fax 251-433-5617	TRAVESIA AGEE
	Deliver To
	MUNICIPAL GARAGE ATTN: SEAN
	770 GAYLE STREET
	MOBILE, AL 36604

Date Ordered	Vendor Number	Date Required	Ship Via	Terms	Department
05/07/26	232872				FLEET MANAGEMENT-GARAGE

LN	Description / Account	Qty	Unit Price	Net Price
	TRUCK SHOULD BE DELIVERED W/AN 84" CAB TO AXLE LENGTH.			
	VENDOR TO PROVIDE 2027 FREIGHTLINER M2-106 PLUS CREW CAB WITH FLEETCO PRO CONTRACTOR HYDRAULIC DUMP BODY AND PINTLE TRAILER HITCH			
	AS REQUESTED BY 2096-STORMWATER			
1	1000.40.20.2070.2070.2070.0000.0000.45040.			253222.00
	Ship To MOTOR POOL - ATTN: ADAM LYNN 770 GAYLE STREET MOBILE, AL 36604 Delivery Reference TRAVESIA AGEE			
	Deliver To MUNICIPAL GARAGE ATTN: SEAN 770 GAYLE STREET MOBILE, AL 36604			

Requisition Link

Requisition Total 253222.00

***** General Ledger Summary Section *****

Account	Amount	Remaining Budget
1000.40.20.2070.2070.2070.0000.0000.45040.	253222.00	1428769.01

Bill To	Requisition 00012205-00 FY 2026
MUNICIPAL GARAGE ATTN: SEAN	
770 GAYLE STREET	Acct No:
	1000.40.20.2070.2070.2070.0000.0000.45040.
MOBILE, AL	Review:
36604	Buyer: 9105paij
SEAN.CLARK@CITYOFMOBILE.ORG	Status: Approved Page 6

Vendor	Ship To
WARD INTERNATIONAL TRUCKS LLC	MOTOR POOL - ATTN: ADAM LYNN
P O BOX 50375	770 GAYLE STREET
	MOBILE, AL 36604
MOBILE, AL 36605	AGEET@CITYOFMOBILE.GOV
Tel#251-433-5616	Delivery Reference
Fax 251-433-5617	TRAVESIA AGEE
	Deliver To
	MUNICIPAL GARAGE ATTN: SEAN
	770 GAYLE STREET
	MOBILE, AL 36604

Date Ordered	Vendor Number	Date Required	Ship Via	Terms	Department
05/07/26	232872				FLEET MANAGEMENT-GARAGE

Account		Amount	Remaining Budget
PUBLIC SERVICES ADMINISTRATION	FLEET VEHICLES		

***** Approval/Conversion Info *****

Activity	Date	Clerk	Comment
Rejected	05/07/26	MATTHEW ANDERSON	NA
Approved	05/07/26	MATTHEW ANDERSON	NA
Approved	05/07/26	SHONNDA SMITH	Auto approved by: 910516584
Approved	05/07/26	CHERI BOUCHER	Auto approved by: 910516584
Approved	05/07/26	MATTHEW ANDERSON	
Approved	05/07/26	SHONNDA SMITH	Auto approved by: 910516584
Approved	05/07/26	CHERI BOUCHER	Auto approved by: 910516584
Approved	06/26/26	DONALD ROSE	Auto approved by: 9105paij
Approved	06/26/26	SANDRA LEWIS	Auto approved by: 9105paij
Approved	06/26/26	STEVEN KRONINGER	Auto approved by: 9105paij
Approved	06/26/26	SAMANTHA COOLEY	Auto approved by: 9105paij
Approved	06/26/26	JAMES NEESE	Auto approved by: 9105paij
Approved	06/26/26	PATRICIA KENNEDY-JONES	Auto approved by: 9105paij
Approved	06/26/26	REBECCA CRUMPLER	Auto approved by: 9105paij
Approved	06/26/26	ANNE FOLEY	Auto approved by: 9105paij
Approved	06/26/26	JOHN PAINE	

Authorized By: _____ Date: _____
Signature

BID TABULATION FOR BID #6052
FOR
33,000 GVWR CREW CAB TRUCK WITH HYDRAULIC DUMPING CONTRACTOR BODY

WARD INTERNATIONAL	$126,611.00	INT'L MV607 KNAPHEIDE GLDM-120B-P
EMPIRE TRUCK	$130,393.00	FREIGHTLINER M2-106 PLUS FLEETCO AO CONTRACTOR BED
THOMPSON TRACTOR	$158,857.23	FREIGHTLINER M2 LEDWELL CUSTOM 14' FLATBED DUMP

SEALED BID

Do Not Return Via Email or Fax

Mailing Address:
P. O. Box 1948
Mobile, Alabama 36633
(251) 208-7434

CITY OF MOBILE

Purchasing Department and Package Delivery: Bid Delivery Address:

Government Plaza
4th Floor, Room S-408
205 Government St.
Mobile, Alabama 36644
Postal Service Does Not Deliver to This Street Address

BID SHEET

This is Not an Order

READ TERMS AND CONDITIONS ON REVERSE SIDE OF THIS PAGE BEFORE BIDDING

Typed by: lw Buyer: 002

Please quote the lowest price at which you will furnish the articles listed below

DATE	BID NO.	DEPARTMENT	Commodities to be delivered F.O.B. Mobile to:
5/8/2026	6052	Motor Pool	To Be Specified

This bid must be received and stamped by the Purchasing office not later than: 12:01 p.m. Friday, May 22, 2026

QUANTITY	ARTICLES	Bid on this form ONLY. Make no changes on this form. Attach any additional information required to this form.	UNIT	UNIT PRICE Dollars	UNIT PRICE Cents	EXTENSION Dollars	EXTENSION Cents
	33,000 lb. GVWR CREW CAB TRUCK WITH HYDRAULIC DUMPING CONTRACTOR BODY						
APPX 1-3	2026 or Newer 33,000 lb. GVWR Crew Cab Truck with Hydraulic Dumping Contractor Body as per the following and attached specifications:						
	Chassis:						
	Make_____ Model_____						
	Year _____						
	Body:						
	Make_____ Model_____						
	You may bid using cooperative pricing, but price must be firm. City will not change or adjust pricing upon delivery.						
	Price must include delivery FOB Mobile.						
	Price must include a minimum of eight (8) hours training for maintenance of machine and for operation training.						
	Include cost of the title application in your price.						
	A cone of silence is in effect on this bid. DO NOT contact City employees with questions. All questions must be emailed to purchasing@cityofmobile.gov.						
	Page 1 of 2			TOTAL			

RETURN ONE SIGNED COPY OF THIS BID IN ENCLOSED ENVELOPE

State delivery time within_____ days of receipt of P.O.

Phone Number _____

Email Address _____

Firm Name _____

Signature _____

Type or Print Name _____

1. All quotations must be signed with the firm name and by an authorized officer or employee.

2. Verify your bid before submission as it cannot be changed or corrected after being opened. In case of error in extension of prices, the unit price will govern.

3. If you do not bid, return this sheet and state reason. Otherwise, your name may be removed from our mailing list.

4. The right is reserved to reject any, or all quotations, or any portions thereof, and to waive technicalities if deemed to be in the interest of the City of Mobile.

5. This bid shall not be reassignable except by written approval of the Purchasing Agent of the City of Mobile.

6. State brand and model number of each item. All items bid must be new and latest model unless otherwise specified.

7. If bid results are desired, enclose a self-addressed and stamped envelope with your bid. (All or None bids only)

8. Do not include Federal Excise Tax as an exemption certificate will be issued in lieu of same. The City is exempt from the State of Alabama and City sales taxes.

9. PRICES ARE TO BE FIRM AND F.O.B. DESTINATION UNLESS OTHERWISE REQUESTED.

10. BID WILL BE AWARDED ON ALL OR NONE BASIS UNLESS OTHERWISE STATED.

11. Bids received after specified time will be returned un-opened.

12. Failure to observe stated instructions and conditions will constitute grounds for rejection of your bid.

13. Furnish literature, specifications, drawings, photographs, etc., as applicable with the items bid.

14. Vendor may be required to obtain City of Mobile Business License as applicable to City of Mobile Municipal Code Section 34-50. For Business License inquiry, contact the Revenue Department at (251) 208-7462 or cityofmobile.org/business-license-overview/

15. **IF** a bid bond is required in the published specifications, see below:
    Each bid shall be accompanied by a **Cashier's Check, Certified Check, Bank Draft** or **Bid Bond** for the sum of five (5) Percent of the amount bid, made payable to the City of Mobile and certified by a reputable banking institution. All checks shall be returned promptly, except the check of the successful bidder, which shall be returned after fulfilling the bid.

16. Contracts in excess of $50,000 require that the successful bidder make every possible effort to have at least fifteen (15) percent of the total value of the contract performed by socially and economically disadvantaged individuals.

17. All bids/bid envelopes must have the bid number noted on the front. Bids that arrive unmarked and are opened in error shall be returned to vendor as an unacceptable bid.

18. If successful vendor's principal place of business is out-of-state, vendor may be required to have a Certificate of Authority to do business in the State of Alabama from the Alabama Secretary of State prior to issuance of a Purchase Order. Vendors are solely responsible for consulting with the Secretary of State to determine whether a Certificate is required. See www.sos.alabama.gov/BusinessServices/ForeignCorps.aspx . Please note that the time between application for and issuance of a Certificate of Authority may be several weeks.

19. Vendors do not need a City of Mobile Business License or Certificate of Authority from the Alabama Secretary of State to submit a bid, but may need to obtain the Business License and Certificate of Authority if applicable, prior to issuance of a Purchase Order.

20. Bids and addendums are posted at www.cityofmobile.org/services/business/bids/. It is the responsibility of the vendor to check the City's bid page for updates and addendums.

21. Vendors must be able to provide the following upon request. Federal W-9 form, proof of registration in the E-Verify program, and Certificate of Authority to do business in Alabama/Registration with the Alabama Secretary of State within 24 hours of request.

22. City of Mobile applies local vendor preference to all purchases: Code of Aabama, 1975, Sections 41-16-50(a) and 41-16-50(d), except federally funded grants.

23. Equal Employment Opportunity. Except as otherwise provided under 41 CFR part 60, all contracts that meet the definition of "federally assisted construction contract" in 41 CFR Part 60-1.3 must include the equal opportunity clause provided under 41 CFR 60-1.4(b), in accordance with Executive Order 11246, "Equal Employment Opportunity" (30 FR 12319, 12935, 3 CFR Part, 1964-1965 Comp., p. 339), as amended by Executive Order 11375, "Amending Executive Order 11246 Relating to Equal Employment Opportunity," and implementing regulations at 41 CFR part 60, "Office of Federal Contract Compliance Programs, Equal Employment Opportunity, Department of Labor."

24. Davis-Bacon Act, as amended (40 U.S.C. 3141-3148) will apply when required by Federal program regulations.

BID CONTINUATION SHEET

QUANTITY	ARTICLES	Bid on this form ONLY. Make no changes on this form. Additional information to be submitted on separate sheet and attached hereto.	UNIT	UNIT PRICE Dollars	UNIT PRICE Cents	EXTENSION Dollars	EXTENSION Cents
		Page 2 of 2					

All vendors will be required to provide verification of enrollment in the E-Verify program. Additional information may be found at http://immigration.alabama.gov/

If the successful vendor's principal place of business is out-of-state, vendor may be required to have a Certificate of Authority to do business in the State of Alabama from the Secretary of State prior to issuance of a Purchase Order.

Vendors are solely responsible for consulting with the Secretary of State to determine whether a Certificate is required. See: www.sos.alabama.gov/BusinessServices/ForeignCorps.aspx. Please note that the time between application for the issuance of a Certificate of Authority may be several weeks.

Upon notification, vendor will have 10 business days to provide the Certificate of Authority and the E-Verify numbers to the Purchasing Department before award can be completed. (Vendors will possibly need to pay the expedite fee to meet this requirement because application is not sufficient. We must have a copy of the certificate with your Company ID number.)

Vendors do not need a City of Mobile Business License or Certificate of Authority from the Alabama Secretary of State, nor the E-Verify for certification to submit a bid, but will need to obtain the Business License and Certificate of Authority verification and/or provide the E-Verify Certification, if applicable, prior to issuance of a Purchase Order.

State of Alabama Local Vendor Preference Law 41-16-50 (a) and (d) will apply to this purchase.

CONE OF SILENCE. From the time of advertising, and until the final award by completion of a signed contract or purchase document issued by the City, there is a prohibition on communication by respondents (or anyone on their behalf) with the City staff and elected officials regarding this request for bids, proposals, or qualifications. This does not apply to communications directly with the Procurement Department staff during authorized question periods, or with designated City staff during pre-bid conferences, interviews, requests for clarification, and written contract negotiations. Breaking the established prohibition on communication, if proven, may result in a disqualification of your submittal.

If you have any questions, please feel free to contact the Purchasing Department at purchasing@cityofmobile.gov.

Pricing to be firm for a three (3) month period following award.

TO BE AWARDED ALL OR NONE.

						TOTAL	

RETURN ONE SIGNED COPY OF THIS QUOTATION IN ENCLOSED ENVELOPE

READ ABOVE INSTRUCTIONS BEFORE QUOTING

Firm Name _____

By _____

33,000-LB GVWR CREW CAB TRUCK WITH HYDRAULIC DUMPING CONTRACTOR BODY

CAB	4-DOOR CREW CAB
DAYTIME RUNNING LIGHTS	DRL WHEN ENGINE RUNNING & PARK BRAKE OFF
DRIVER SEAT	AIR SUSPENDED
DRIVER SEAT UPHOLSTERY	VINYL
SEAT-PASSENGER	VINYL BENCH SEAT, MID BACK, W/STORAGE BOX
PASSENGER SEAT	BENCH SEAT SUPPORT, INTEGRATED STORAGE BOX
PASSENGER SEAT UPHOLSTERY	VINYL
HEADLAMPS	HALOGEN
DOOR/WINDOW FEATURES	ELECTRIC WINDOWS AND DOOR LOCKS
CHASSIS	MEDIUM DUTY, CLASS 7 W/6.7L, (MAX 33,000LBS GVWR)
OPERATING CLASS	OPERATING CLASS 7; 33,000LB GVWR
ENGINE MOTOR	CUMMINS 300HP@2600RPM (GOV) 660 LB-FT, US20
TRANSMISSION	3000 RDS 6-SPEED ALLISON GEN6 W/PROGNOSTICS, WITH PTO PROVISION
TRANSMISSION AUTO NEUTRAL ON P-BRAKE	AUTO NEUTRAL SINGLE INPUT WITH SHIFT SELECTOR OVERRIDE
ENGINE BRAKE TYPE	VGT TURBO EXHAUST BRAKE
BATTERY DISCONNECT SWITCH	BATTERY DISCONNECT SWITCH
STARTER MOTOR	12-VOLT MELCO STARTER
FRONT AXLE	12,000LB MERITOR MFS+
MIRRORS-EXTERIOR	HEATED AND MOTORIZED MIRRORS BOTH SIDES, BLACK

HYDRAULIC DUMPING CONTRACTOR BED WITH FOLD DOWN OR DROP DOWN SIDES AND PINTLE TRAILER HITCH

HYDRAULIC DUMPING PRO-CONTRACTOR BED WITH FOLD DOWN OR DROP DOWN

DUMPING HOIST CAPABLE OF DUMPING 8-10 TONS

12'DRW

1/8" DIAMOND PLATE STEEL FLOOR

3" CHANNEL CROSS MEMBERS

6" CHANNEL LONGBEAMS SET AT 34" WIDE

FULL LENGTH FOLD-DOWN SIDES & REAR GATE

3"x4" TUBE BULKHEAD W/STOP, TAIL,TURN & REVERSE LIGHTS

BUILD BULKHEAD TO FIT TRUCK

SINGLE 7-WAY TRAILER PLUG

LED LIGHTS

UNDERCOATED

POWDER COATED BLACK

GLOSS BLACK STEEL UNDERBODY TRUCK TOOL BOX W/ALUMINUM DOOR

18"x18"x48"

POWDER COATED DIAMOND TREAD ALUMINUM DOOR.

18x18 INCH WELDED BLACK STRUCTURAL STEEL MOUNTING BRACKETS

30 TON HEAVY DUTY SWIVEL TYPE PINTLE HOOK

ALLOWS TOWING HEAVY EQUIPMENT OVER UNEVEN TERRAIN

STRONG FORGED STEEL CONSTRUCTION

SPRING-LOADED PINTLE HOOK LOCK ARM PROVIDES A SECURE HOLD ONTO 3IN I.D

LUNETTE EYES AND DRAWBARS

HITCH TO BE RATED UP TO 60,000 LBS.

7-WAY TRAILER PLUG, TRUCK-SIDE

7-WAY ROUND

BUILT IN SAFETY LATCH FOR TRAILER P,LUG

SPRING-LOADED DOOR PROTECTS TERMINALS WHEN NOT IN USE.

PROVIDE VALVES, FITTINGS, HOSES, GLADHANDS TO INSTALL THE TRACTOR PACKAGE, AND STEEL TO FABRICATE HITCH PLATE.

INSTALL CONTRACTOR BODY ON TRUCK

INSTALL HITCH PLATE AND PINTLE HITCH

PAINT ALL AREAS AFFECTED BY INSTALL

INSTALL TRACTOR / TRAILER PACKAGE ONTO TRUCK, ROUTE AIR LINES TO REAR OF TRUCK, PLUMB AIR LINES, INSTALL GLADHANDS

MOBILE
ALABAMA

PROCUREMENT DEPARTMENT

Potential bidders are responsible to check this site for any ADDENDUMS that are issued. It is the responsibility of the BIDDER to check for, download, and include with their BID RESPONSE any and all ADDENDUMS that are issued for a specific BID published by the City of Mobile. Failure to download and include ADDENDUMS in your BID RESPONSE may cause your bid to be rejected.

This is a sealed bid. Any responses faxed or emailed will be rejected.

This is a sealed bid. Any response must be submitted in a sealed envelope with the bid number and bid opening date on the outside of the envelope.

Any response that arrives improperly marked or with no bid number and opening date on the outside of the delivery or express package and opened in error will be rejected and not considered.

It is the responsibility of the bidder to ensure that their bid response is delivered to and received in the Purchasing Department before the date and time of the bid opening.

Please read the Terms and Conditions.

All bids are F.O.B. destination unless otherwise stated.

Please sign your bid.

Package/Bid Delivery Address (Request First Delivery):
Purchasing Department
205 Government St., RM S408
Mobile, AL 36644

CAPITAL CONTRACT SUMMARY SHEET

C#5827

AGENDA ITEM SUMMARY SHEET

Agenda of: July 7, 2026

Submitted by:
Carleen Stout, Dep Dir-Real Estate/Asset Mgmt

Sponsored by:
Spiro Cheriogotis, Mayor
CJ Small, Councilmember

Purpose and Scope of Project:
Installation of new and upgraded city purchased lighting assemblies/football field light/new pedestals, additional circuit and conduit for future expansion, installation of new city purchased lighted scoreboard, supplying existing well pump with new power for the field irrigation system.

Amount of Contract:
$288,175.00

Funding Source
F584-001 - CIP Trimmier Park Lights Upgrade

ATTACHMENTS:
1. Trimmier Council Pkg

REVIEWERS:
Stacey Howard
Chad Holm
Brenda Rhodes
Cherlina Monteiro
James Barber

RESOLUTION

Sponsored by: Mayor Spiro N. Cheriogotis and Councilmember C.J. Small

BE IT RESOLVED BY THE CITY COUNCIL OF THE CITY OF MOBILE, ALABAMA that the Mayor and the City Clerk are hereby authorized and directed to execute and attest, respectively, for and on behalf of the City of Mobile, a Contract Agreement between the City of Mobile and the company listed below, for work as outlined in the contract attached hereto and made a part hereof as set forth in full herein. A copy of said contract is on file in the office of the City Clerk.

Name of Company:	Bill Smith Electric, Inc.
Project Name:	CIP Trimmier Park Lights Upgrade
Project Number:	PR-068-24
Amount:	$288,175.00

Adopted:

_____

City Clerk

CONTRACT #

CAPITAL CONTRACT SUMMARY SHEET

(2 COPIES REQUIRED)

PROJECT NAME: CIP Trimmier Park Lights Upgrade

ARCHITECTURAL ENGINEERING PROJECT# PR-068-24

PROJECT #F584-001 (20002000-48010) **DATE OF RECEIPT**_____

PROJECT DESCRIPTION Construction project: Installation of new and upgraded City purchased lighting assemblies/football field light/new pedestals, additional circuit and conduit for future expansion, installation of new city purchased lighted scoreboard, supplying existing well pump with new power for the field irrigation system.

CONTRACT AMOUNT $288,175.00

VENDOR NAME Bill Smith Electric, Inc. **VENDOR NUMBER** 286307

DEPT # 3030 **DEPT NAME** Real Estate Asset Mgt.

CONTRACT ADMINISTRATOR Carleen Stout

Please Select by circling one (Type):

Architectural Engineering Testing Professional Services

Construction (Unit Price)* **Construction**** Non Contractual Performance

RETAINAGE INFORMATION:

SHOULD RETAINAGE BE WITHHELD? Y X **N**___ ; 5% of the 1st 50% X or

If different, indicate special rate_____

Unit Price Contracts are estimates per F. Kessler - do not require Change Orders

****General Construction requires Change Order for 10% overages.***

Prepared by: Rhonda Lewis **Date** 6-24-2026

Revised 2/25/2016 Marilyn McMillan

June 25, 2026

Subject: CIP TRIMMIER PARK LIGHTS UPGRADE

Dear Council Members:

Attached to this memo is an agreement/contract between Bill Smith Electric Inc. and the City of Mobile, for the project number PR-068-24 titled, "CIP TRIMMIER PARK LIGHTS UPGRADE" in the amount of $ 288,175.00.

We look forward to continued communication on this important project. Please call me at 251-208-6035 or email me at chuck.babin@cityofmobile.gov with questions or concerns.

Respectfully,

Chuck Babin

Information on this project is as follows:

Commitment Type:	**Construction**
Department:	**Real Estate Asset Management**
Fiscal Year:	**26**
District:	**3**

LEGAL DEPARTMENT — CONTRACT REVIEW COVER SHEET [REVIEW # 1]

To: RHONDA LEWIS (Requester) / REAM (Department)

From: City of Mobile Legal Department
Date: 06/15/2026
CityLaw ID: A26-1970
Project / Contract Title: CONTRACT - CIP TRIMMIER PARK LIGHTS UPGRADE
Vendor / Consultant: BILL SMITH ELECTRIC, INC.

I. DOCUMENTS SUBMITTED FOR LEGAL REVIEW (✓ all that apply)

- ■ Contract / Agreement / MOU / Easement
- ☐ Exhibit A – Scope of Work
- ■ Exhibit B – Compensation or Fee Schedule
- ■ Exhibit C – Insurance Requirements
- ☐ Certificate of Insurance (COI)
- ☐ Endorsements
- ☐ Other (specify): _____
- ☐ Resolution
- ☐ Amendment(s)
- ☐ Change Order(s)
- ☐ Contract Prior Amendments/Change Orders
- ☐ E-Verify documents

II. LEGAL REVIEW STATUS

■ **Approved as to Legal Form and Compliance** — All submitted documents have been reviewed and approved for legal compliance.

■ *Requires revision before final approval*

III. FOR CIVICPLUS AND ADOBE MATTERS
[The following items were not submitted to Legal for Review]

- ☐ Contract / Agreement / MOU / Easement
- ■ Exhibit A – Scope of Work
- ■ Exhibit B – Compensation or Fee Schedule
- ☐ Exhibit C – Insurance Requirements
- ■ Certificate of Insurance (COI)
- ■ Endorsements
- ☐ Other (specify): RECOMMENDATIONS: (1) DELETE SECOND CONTRACTOR SIGNATURE (THERE ARE TWO) AND ADD CONTRACTOR NAME AT SIGNATURE LINE; (2) REQUEST THE COI AND ENDORSEMENTS AND ADD BOTH TO CONTRACT PACKET; (3) REVISE THE NOTARY ACKNOWLEGEMENT FOR CORPORATION--SAMPLE IN EMAIL TRANSMITTAL; (4) DELETE REAM ON FIRST PAGE OF CONTRACT AND "SE" AT BARTER'S NAME; (5) INCLUDE E-VERIFY, GENERAL CONDITIONS AND OTHER SUPPORTING DOCS/EXHIBITS.
- ■ Resolution
- ☐ Amendment(s)
- ☐ Change Order(s)
- ☐ Contract Prior Amendments/Change Orders
- ■ E-Verify documents

V. LEGAL DEPARTMENT SIGN-OFF

BRYAN HORSLEY — **Reviewed By**
06/15/2026 — **Date**

AIA® Document A101® – 2017

Standard Form of Agreement Between Owner and Contractor where the basis of payment is a Stipulated Sum

AGREEMENT made as of the date last signed.
(In words, indicate day, month and year.)

BETWEEN the Owner:
(Name, legal status, address and other information)

City of Mobile
P. O. Box 1827
Mobile, AL 36633-1827

and the Contractor:
(Name, legal status, address and other information)

Bill Smith Electric, Inc.
1095 Hidden Terrace Drive
Cantonment, FL 32533
(850)968-6500

for the following Project:
(Name, location and detailed description)

CIP Trimmier Park Lights Upgrade
PR-068-24
3600 Alba Club Road
Mobile, AL 36605
F584-001 UPGRADING THE LIGHTING SYSTEM FOR SAFETY IN THE FOOTBALL FIELD AREA **Scope:** Installation of new and upgraded City purchased lighting assemblies to replace previously demolished football field light; New service pedestals, with additional circuit and conduit planning to accommodate future expansion; Installation of a new City purchased lighted scoreboard; Supplying the existing well pump with new power for the field irrigation system.

The Design Consultant:
(Name, legal status, address and other information)

Jaguar Consulting, LLC
8658 Capital Drive North
Mobile, AL 36695
(251)307-1037

The Structural Consultant:
(Name, location and detailed description)

Barter & Associates, Inc
1614 Government St.
Mobile, AL 36604

The Owner and Contractor agree as follows.

ADDITIONS AND DELETIONS:
The author of this document may have revised the text of the original AIA standard form. An *Additions and Deletions Report* that notes revisions to the standard form text is available from the author and should be reviewed. A vertical line in the left margin of this document indicates where the author has added to or deleted from the original AIA text.

This document has important legal consequences. Consultation with an attorney is encouraged with respect to its completion or modification.

The parties should complete A101®–2017, Exhibit A, Insurance and Bonds, contemporaneously with this Agreement. AIA Document A201®–2017, General Conditions of the Contract for Construction, is adopted in this document by reference. Do not use with other general conditions unless this document is modified.

AIA Document A101 – 2017. Copyright © 1915, 1918, 1925, 1937, 1951, 1958, 1961, 1963, 1967, 1974, 1977, 1987, 1991, 1997, 2007 and 2017. All rights reserved. "The American Institute of Architects," "American Institute of Architects," "AIA," the AIA Logo, and "AIA Contract Documents" are trademarks of The American Institute of Architects. This document was produced at 20:47:31 CDT on 06/16/2026 under Subscription No 20240042832 which expires on 07/01/2026, is not for resale, is licensed for one-time use only, and may only be used in accordance with the AIA Contract Documents® Terms of Service. To report copyright violations, e-mail docinfo@aiacontracts.com.
User Notes:
(6a31b62497654e828ab1dc45)

TABLE OF ARTICLES

1 THE CONTRACT DOCUMENTS

2 THE WORK OF THIS CONTRACT

3 DATE OF COMMENCEMENT AND SUBSTANTIAL COMPLETION

4 CONTRACT SUM

5 PAYMENTS

6 DISPUTE RESOLUTION

7 TERMINATION OR SUSPENSION

8 MISCELLANEOUS PROVISIONS

9 ENUMERATION OF CONTRACT DOCUMENTS

ARTICLE 1 THE CONTRACT DOCUMENTS

The Contract Documents consist of this Agreement, Conditions of the Contract (General, Supplementary, and other Conditions), Drawings, Specifications, Addenda issued prior to execution of this Agreement, other documents listed in this Agreement, and Modifications issued after execution of this Agreement, all of which form the Contract, and are as fully a part of the Contract as if attached to this Agreement or repeated herein. In the event of conflict in the documents the following order of precedence shall control: this executed A101 Agreement and any amendments, change orders, supplementary conditions, general conditions, specifications, drawings, manufacturer reference documents. Technical reference materials do not supersede contract requirements. Modifications made by the Owner control over standard AIA language. The Contract represents the entire and integrated agreement between the parties hereto and supersedes prior negotiations, representations, or agreements, either written or oral. An enumeration of the Contract Documents, other than a Modification, appears in Article 9.

ARTICLE 2 THE WORK OF THIS CONTRACT

The Contractor shall fully execute the Work described in the Contract Documents, except as specifically indicated in the Contract Documents to be the responsibility of others.

ARTICLE 3 DATE OF COMMENCEMENT AND SUBSTANTIAL COMPLETION

§ 3.1 The date of commencement of the Work shall be:
(Check one of the following boxes.)

[ ] The date of this Agreement.

[X] A date set forth in a notice to proceed issued by the Owner.

[ ] Established as follows:
(Insert a date or a means to determine the date of commencement of the Work.)

§ 3.1.1 Notwithstanding the preceding, Contractor shall perform no work under this Contract until receipt of a notice to proceed. Contractor acknowledges and agrees that no minimum amount of work is guaranteed under this Contract and City may elect to issue no notice to proceed. If a notice is issued, the City reserves the right to amend, reduce or cancel the notice in its sole discretion.

§ 3.2 The Contract Time shall be measured from the date of commencement of the Work.

§ 3.3 Substantial Completion

§ 3.3.1 Subject to adjustments of the Contract Time as provided in the Contract Documents, the Contractor shall achieve Substantial Completion of the entire Work:

AIA Document A101 – 2017. Copyright © 1915, 1918, 1925, 1937, 1951, 1958, 1961, 1963, 1967, 1974, 1977, 1987, 1991, 1997, 2007 and 2017. All rights reserved. "The American Institute of Architects," "American Institute of Architects," "AIA," the AIA Logo, and "AIA Contract Documents" are trademarks of The American Institute of Architects. This document was produced at 20:47:31 CDT on 06/16/2026 under Subscription No 20240042832 which expires on 07/01/2026, is not for resale, is licensed for one-time use only, and may only be used in accordance with the AIA Contract Documents® Terms of Service. To report copyright violations, e-mail docinfo@aiacontracts.com.
User Notes: (6a31b62497654e828ab1dc45)

(Check one of the following boxes and complete the necessary information.)

[X] Not later than Sixty (60) calendar days from the date of commencement of the Work.

[ ] By the following date:

§ 3.3.3 If the Contractor fails to achieve Substantial Completion as provided in this Section 3.3, liquidated damages, if any, shall be assessed as set forth in Section 4.5.

ARTICLE 4 CONTRACT SUM

§ 4.1 The Owner shall pay the Contractor the Contract Sum in current funds for the Contractor's performance of the Contract. The Contract Sum shall be Two Hundred Eighty-Eight Thousand One Hundred Seventy Five and 00/100 Dollars ($ 288,175.00), subject to additions and deductions as provided in the Contract Documents.

Base Original Bid: $ 284,100.00

Renegotiated Base Bid: $ 268,175.00

Envelope Adjustment: $ 0.00

Contingency Allowances: $20,000.00

Alternates 1,2,3, and 5: $0.00

Total Contract Sum: $288,175.00

§ 4.2 Alternates

§4.2.1 Alternates, if any, included in the Contract Sum:

N/A

§ 4.3 Contingency Allowance

Contingency Allowance: Twenty Thousand and 00/100 ($ 20,000.00)

§4.3.1 Contingency Allowance shall cover cost of material, labor, overhead, profit and other expenses for complete installation of items of additional work as required for a complete, functional project.

§4.3.2 Contingency Allowance shall be used for unforeseen conditions not covered in the construction documents.

§4.3.3 All extra work under this section must be authorized by the Owner, in writing, prior to procurement of materials or undertaking work

§4.3.4 Upon completion of the Work, the unused portion of the Allowance shall be credited back to the Owner in the form of a Change Order.

§4.3.5 Allowances are subject to the same provision of AIA 201 §7.3.7.

§ 4.4 Unit prices, if any:

(Identify the item and state the unit price and quantity limitations, if any, to which the unit price will be applicable.)

Item	Units and Limitations	Price per Unit (Price per Unit ($0.00).00)

§ 4.5 Liquidated damages

Any delay in the completion of the Work as provided for in the Contract Documents will cause inconvenience to the public and loss and damage to the Owner in interest, and in additional administrative, architectural, inspection, and supervision charges. Therefore, a time charge equal to ($250.00) per calendar day will be made against the Contractor for the entire period that any part of the Work that remains uncompleted or any required closeout documents that are not acceptably submitted for more than thirty (30) days after the time specified for the Substantial Completion of the Work, the amount of which shall be deducted by the Owner, and shall be retained by the Owner out of monies otherwise due the

AIA Document A101 – 2017. Copyright © 1915, 1918, 1925, 1937, 1951, 1958, 1961, 1963, 1967, 1974, 1977, 1987, 1991, 1997, 2007 and 2017. All rights reserved. "The American Institute of Architects," "American Institute of Architects," "AIA," the AIA Logo, and "AIA Contract Documents" are trademarks of The American Institute of Architects. This document was produced at 20:47:31 CDT on 06/16/2026 under Subscription No.20240042832 which expires on 07/01/2026, is not for resale, is licensed for one-time use only, and may only be used in accordance with the AIA Contract Documents® Terms of Service. To report copyright violations, e-mail docinfo@aiacontracts.com.
User Notes:
(6a31b62497654e828ab1dc45)

Contractor in the final payment, not as a penalty, but as liquidated damages sustained.

ARTICLE 5 PAYMENTS

§ 5.1 Progress Payments

§ 5.1.1 Based upon Applications for Payment submitted to the Design Consultant by the Contractor and Certificates for Payment issued by the Design Consultant, the Owner shall make progress payments on account of the Contract Sum to the Contractor as provided below and elsewhere in the Contract Documents.

§ 5.1.2 The period covered by each Application for Payment shall be one calendar month ending on the 25th of the month.

§ 5.1.3 Provided that an Application for Payment is received by the Design Consultant not later than the First day of a month, the Owner shall make payment of the amount certified to the Contractor not later than the Tenth day of the following month. If an Application for Payment is received by the Design Consultant after the application date fixed above, payment of the amount certified shall be made by the Owner not later than Thirty (30) days after the Design Consultant receives the Application for Payment.

§ 5.1.4 Each Application for Payment shall be based on the most recent schedule of values submitted by the Contractor in accordance with the Contract Documents. The schedule of values shall allocate the entire Contract Sum among the various portions of the Work. The schedule of values shall be prepared in such form, and supported by such data to substantiate its accuracy, as the Design Consultant may require. This schedule of values shall be used as a basis for reviewing the Contractor's Applications for Payment.

§ 5.1.5 Applications for Payment shall show the percentage of completion of each portion of the Work as of the end of the period covered by the Application for Payment.

§ 5.1.6 In accordance with AIA Document A201™–2017, General Conditions of the Contract for Construction, and subject to other provisions of the Contract Documents, the amount of each progress payment shall be computed as follows:

§ 5.1.6.1 The amount of each progress payment shall first include:

.1 That portion of the Contract Sum properly allocable to completed Work;

.2 That portion of the Contract Sum properly allocable to materials and equipment delivered and suitably stored at the site for subsequent incorporation in the completed construction, or, if approved in advance by the Owner, suitably stored off the site at a location agreed upon in writing; and

.3 That portion of Construction Change Directives that the Design Consultant determines, in the Design Consultant 's professional judgment, to be reasonably justified.

§ 5.1.6.2 The amount of each progress payment shall then be reduced by:

.1 The aggregate of any amounts previously paid by the Owner;

.2 The amount, if any, for Work that remains uncorrected and for which the Design Consultant has previously withheld a Certificate for Payment as provided in Article 9 of AIA Document A201–2017;

.3 Any amount for which the Contractor does not intend to pay a Subcontractor or material supplier, unless the Work has been performed by others the Contractor intends to pay;

.4 For Work performed or defects discovered since the last payment application, any amount for which the Design Consultant may withhold payment, or nullify a Certificate of Payment in whole or in part, as provided in Article 9 of AIA Document A201–2017; and

.5 Retainage withheld pursuant to Section 5.1.7.

§ 5.1.6.3 Any Progress Payment shall include partial release of liens for material and labor for previous application for payment amount approved and paid. The DBE Utilization Report shall be included with the pay application.

§ 5.1.7 Retainage

§ 5.1.7.1 For each progress payment made prior to Substantial Completion of the Work, the Owner may withhold the following amount, as retainage, from the payment otherwise due:

Five percent (5%) of the first fifty percent (50%) of the completed work and after fifty percent (50%) completion has been accomplished, no further retainage shall be held from the original Contract Sum. Increases in the contract sum by Change Order shall also be subject to retainage.

AIA Document A101 – 2017 Copyright © 1915, 1918, 1925, 1937, 1951, 1958, 1961, 1963, 1967, 1974, 1977, 1987, 1991, 1997, 2007 and 2017 All rights reserved. "The American Institute of Architects," "American Institute of Architects," "AIA," the AIA Logo, and "AIA Contract Documents" are trademarks of The American Institute of Architects. This document was produced at 20:47:31 CDT on 06/16/2026 under Subscription No.20240042832 which expires on 07/01/2026, is not for resale, is licensed for one-time use only, and may only be used in accordance with the AIA Contract Documents® Terms of Service. To report copyright violations, e-mail docinfo@aiacontracts.com.
User Notes:
(6a31b62497654e828ab1dc45)

§ 5.1.7.1.1 The following items are not subject to retainage: N/A

§ 5.1.7.2 Reduction or limitation of retainage, if any, shall be as follows:

The net amount of the Retainage shall be equal to two and one half percent (2.5%) of total Contract Sum, as increased or decreased by Change Order

§ 5.1.7.3 If final completion of the work is materially delayed through no fault of the Contractor, the Owner may, at the Owner's sole discretion, without terminating the Contract, release the withheld retention, or any portion thereof, prior to final completion of the work provided the Contractor has complied with § 5.2.2 for the portion of the work for which retainage is being released.

§ 5.1.8 Except with the Owner's prior approval, the Contractor shall not make advance payments to suppliers for materials or equipment which have not been delivered and stored at the site.

§ 5.2 Final Payment

§ 5.2.1 Final monthly progress payment, constituting the entire unpaid balance of the Contract Sum, less retainage, shall be made by the Owner to the Contractor when the Contractor has fully performed the Contract except for the Contractor's responsibility to correct Work as provided in Article 12 of AIA Document A201 (including Owner's then-current modifications which may be obtained from the Owner or, alternatively, a copy of which is incorporated in the Project Manual and incorporated by reference herein as a part thereof), and to satisfy other requirements, if any, which extend beyond final payment; and a Certificate of Substantial Completion has been issued by the Design Consultant /Owner and the project accepted.

§ 5.2.2 The final two- and one-half percent (2.5%) of the total Contract Sum retained by the Owner for final payment to the Contractor of retainage will not be paid until proof of publication is submitted and all written claims paid in full. Contractor to submit the following to show that these requirements have been met:

.1 Contractor's Affidavit of Payment of Debts and Claims (AIA form G706, included in contract documents)

.1.1 Contractor's Release or Waiver of Liens

.1.2 Releases or Waivers of Liens from Subcontractors and Material and Equipment Suppliers;

.2 Contractor's Affidavit of Release of Liens (AIA form G706A, included in contract documents);

.3 Consent of Surety, if any, to final payment (AIA form G707, included in contract documents);

.4 Any additional close out requirements per the contract documents; and

.5 Notarized Affidavit of Notice of Completion advertisement from publisher.

§ 5.3 Publication of Completion

§ 5.3.1 Contractor shall provide proof of publication of Notice of Completion in a local newspaper once per week for a minimum of three (3) consecutive weeks, as required in the Ala. Code 1975 § 39-1-1 (f).

.1 The Notice of Completion shall read as follows:

STATE OF ALABAMA
COUNTY OF MOBILE
NOTICE OF COMPLETION

In accordance with Chapter I, Title 39, Code of Alabama, 1975, NOTICE IS HEREBY given that _Bill Smith Electric, Inc. has completed the contract for CIP Trimmier Park Lights Upgrade, located at 3600 Alba Club Road Mobile, AL 36605. All persons having any claims for labor, material or otherwise in connection with this project should immediately notify the Real Estate Asset Management Department, City of Mobile, P. O. Box 1827, Mobile, Alabama 36633-1827.

§ 5.3.2 Publication of the Notice of Completion shall not begin until the Project has been accepted as Substantially Complete by the City of Mobile.

§ 5.3.2 Final settlement shall not be paid until 30 days after the completion of the notice of publication Ala. Code 1975 § 39-1-1 (f) (3).

ARTICLE 6 DISPUTE RESOLUTION

§ 6.1 Initial Decision Maker The Design Consultant will serve as the Initial Decision Maker pursuant to Article 15 of AIA Document A201-2017, unless the parties appoint below another individual, not a party to this Agreement, to serve as the

AIA Document A101 – 2017. Copyright © 1915, 1918, 1925, 1937, 1951, 1958, 1961, 1963, 1967, 1974, 1977, 1987, 1991, 1997, 2007 and 2017. All rights reserved. "The American Institute of Architects," "American Institute of Architects," "AIA," the AIA Logo, and "AIA Contract Documents" are trademarks of The American Institute of Architects. This document was produced at 20:47:31 CDT on 06/16/2026 under Subscription No.20240042832 which expires on 07/01/2026, is not for resale, is licensed for one-time use only, and may only be used in accordance with the AIA Contract Documents® Terms of Service. To report copyright violations, e-mail docinfo@aiacontracts.com.
User Notes:
(6a31b62497654e828ab1dc45)

Initial Decision Maker.

§ 6.2 Binding Dispute Resolution

For any Claim, the method of binding dispute resolution shall be litigation in a court of competent jurisdiction.

§ 6.3 Governing Law and Venue

This Agreement shall be governed by the laws of the State of Alabama, and the appropriate venue of any actions arising out of this Agreement shall be a court of proper jurisdiction in Mobile, Alabama.

ARTICLE 7 TERMINATION OR SUSPENSION

§ 7.1 The Contract may be terminated by the Owner or the Contractor as provided in Article 14 of AIA Document A201, General Conditions of the Contract for Construction, including Owner's then-current modifications, a copy of which is incorporated in the contract documents and incorporated by reference herein as a part thereof.

§ 7.2 The Work may be suspended by the Owner as provided in Article 14 of AIA Document A201, General Conditions of the Contract for Construction, including Owner's then-current modifications, a copy of which is incorporated in the contract documents and incorporated by reference herein as a part thereof.

ARTICLE 8 MISCELLANEIOUS PROVISIONS

§ 8.1 Where reference is made in this Agreement to a provision of AIA Document A201 or another Contract Document, the reference refers to that provision as amended or supplemented by other provisions of the Contract Documents. A copy of such amended, revised or supplemental provision is incorporated in the contract documents and hereby incorporated by reference herein as a part thereof.

§ 8.2 The Owner's representative:

Director, Real Estate Asset Management
P.O. Box 1827
Mobile, AL 36633-1827

§ 8.3 The Contractor's representative:

Jacob W. Smith, President
1095 Hidden Terrace Drive
Cantonment, FL 32533
850-968-6500

§ 8.4 Neither the Owner's nor the Contractor's representative shall be changed without ten (10) days' prior notice to the other party.

§ 8.5 Insurance and Bonds

§ 8.5.1 Liability of Contractor: To the fullest extent permitted by law, Contractor covenants to release, defend, indemnify, hold harmless, protect, and exonerate both the City and its agents, employees, and representatives, from and against any and all liability, claims (direct and indirect), damages, losses, suits, actions, demands, liens, arbitrations, administrative proceedings, awards, judgments, expenses, costs, and attorneys' fees pertaining to personal injury, bodily injury, death, damage to or destruction of property (including any loss of use), economic loss or damage, labor disputes, safety requirements, performance or non-performance of obligations, certifications, property rights of third parties, sickness or disease, which (1) are caused in whole or in part by the Contractor (herein defined to include but not be limited to Contractor's owners, employees, agents, representatives, subcontractors, suppliers, and invitees or other third parties connected with the Contractor as well as the agents or employees of any of them), or (2) arise out of or are related to work undertaken or to be performed by the Contractor, or (3) arise out of or are related to any other act or omission relating to the Contractor, the Contract, the work under the Contract or otherwise undertaken by the Contractor as defined in the parenthetical of (1) above. It is the specific and express intent of the parties to the contract for the foregoing covenants and indemnity obligations to apply to the fullest extent permitted by applicable law, regardless of whether the liability is caused in whole or in part by a party indemnified hereunder, and whether said liability be caused by, or arise out of, any joint, concurrent, or contributory negligence of a party indemnified hereunder. The contractor agrees it is not a design professional within the meaning of § 41-9A-3, Ala. Code (1975).

§ 8.5.1. This section of the Agreement will survive the expiration or termination of the Agreement.

§ 8.5.2 Contractors Insurance

.1 Workmen's Compensation Insurance: - Statutory-amount and coverage as required by all applicable laws, rules or regulations of the State of Alabama and the United States of America, including the U. S. Longshore and Harbor Workers Act and the Jones Act, and "in rem" endorsements if applicable.

.2 Employee's Liability Insurance shall be provided for limits of liability not less than:

AIA Document A101 – 2017 Copyright © 1915, 1918, 1925, 1937, 1951, 1958, 1961, 1963, 1967, 1974, 1977, 1987, 1991, 1997, 2007 and 2017. All rights reserved. "The American Institute of Architects," "American Institute of Architects," "AIA," the AIA Logo, and "AIA Contract Documents" are trademarks of The American Institute of Architects. This document was produced at 20:47:31 CDT on 06/16/2026 under Subscription No.20240042832 which expires on 07/01/2026, is not for resale, is licensed for one-time use only, and may only be used in accordance with the AIA Contract Documents® Terms of Service. To report copyright violations, e-mail docinfo@aiacontracts.com.
User Notes:
(6a31b62497654e828ab1dc45)

Bodily Injury by Accident	$1,000,000 each accident
Bodily Injury by Disease	$1,000,000 each employee
Bodily Injury by Disease	$1,000,000 each policy

.3 The Contractor shall provide Broad Form (commonly termed Comprehensive) General Liability Insurance (including premises-product-completed operations, independent contractors, and blanket contractual liability), specifically covering the obligations assumed by the Contractor for limits of liability not less than:

Bodily Injury	$1,000,000 each person $1,000,000 each occurrence
Property Damage	$1,000,000 each occurrence; or
Bodily Injury and Property Damage	$1,000,000 combined single limit

.4 Such comprehensive policy shall include the following:

.1 All liability of the Contractor, for the Contractor's Direct Operations

.2 Subcontractor's Operations

.3 Completed Operations Cover, thereby meaning any loss which shall occur after the contract has been completed, but which can be traced back to the Contract

.4 General Aggregate Limit of $2,000,000 shall apply on a "Per Project" Basis

.5 Contractual Liability, meaning thereby: any risk assumed by the Contractor under Hold Harmless Agreements or any other assumption of liability

.6 Broad Form Property Damage Coverage, including Completed Operations

.7 Personal Injury Liability, with employee's exclusions removed

.8 Explosion and Collapse Hazard (if applicable)

.5 Commercial/Business Automobile Liability applicable to all automobiles owned, hired, rented or used by the contractor and automobiles not owned by but used on behalf of the contractor. The automobile liability policy must be provided on either ISO form #CA 00 01 (current edition) or an industry equivalent. In the event the contractor's automobiles haul hazardous materials, the Contractor's policy must be amended to include Pollution Liability-Broadened Coverage (CA9948) or equivalent coverage. Coverage must be maintained until the project has been completed. Policy will provide the following minimum limits:

Bodily Injury	$1,000,000 each person $1,000,000 each occurrence
Property damage	$1,000,000 each occurrence; or,
Bodily Injury and Property damage	$1,000,000 combined single limit

.6 Umbrella/Excess Liability: $2,000,000 combined single limit each occurrence for bodily injury and/or property damage

.7 Builder's Risk Coverage (Property Insurance): The Contractor shall carry for the City, himself, and all Subcontractors a Builder's Risk Policy to cover the full amount of the Contract during construction, fabrication or erection of any equipment.

.1 The Contractor shall purchase and maintain, in a company or companies lawfully authorized to do business in the jurisdiction in which the Project is located, property insurance written on a builder's risk "all-risk" or equivalent policy form in the amount of the initial Contract Sum, plus value of subsequent Contract Modifications and cost of materials supplied or installed by others, comprising total value for the entire Project at the site on a replacement cost basis. Such property insurance shall be maintained, unless otherwise provided in the Contract Documents or otherwise agreed in writing by all persons and entities who are beneficiaries of such insurance, until final payment has been made, or until no person or entity other than the City has an insurable interest in the property, whichever is later. This insurance shall include interests of the City, the Contractor, Subcontractors, Sub-subcontractors, and the Design Professionals in the Project.

AIA Document A101 – 2017. Copyright © 1915, 1918, 1925, 1937, 1951, 1958, 1961, 1963, 1967, 1974, 1977, 1987, 1991, 1997, 2007 and 2017. All rights reserved. "The American Institute of Architects," "American Institute of Architects," "AIA," the AIA Logo, and "AIA Contract Documents" are trademarks of The American Institute of Architects. This document was produced at 20:47:31 CDT on 06/16/2026 under Subscription No.20240042832 which expires on 07/01/2026, is not for resale, is licensed for one-time use only, and may only be used in accordance with the AIA Contract Documents® Terms of Service. To report copyright violations, e-mail docinfo@aiacontracts.com.
User Notes: (6a31b62497654e828ab1dc45)

.2 Property insurance shall be on an "all-risk" or equivalent policy form and shall include, without limitation, insurance against the perils of fire (with extended coverage) and physical loss or damage including, without duplication of coverage, theft, vandalism, malicious mischief, collapse, windstorm, falsework, testing and startup, temporary buildings and debris removal including demolition occasioned by enforcement of any applicable legal requirements, and shall cover reasonable compensation for Architect's/Engineer's and Contractor's services and expenses required as a result of such insured loss.

.3 If the property insurance requires deductibles, the Contractor shall pay costs not covered because of such deductibles. Deductibles shall be limited to a maximum of $2,500.00 unless the loss is caused by windstorm; then deductible shall be a maximum of three percent (3%) of the insured value.

.4 This property insurance shall cover the full value of equipment, material, and other portions of the Work stored off the site, and also portions of the Work in transit. There shall be no limits on the value of loss per occurrence.

.5 A named storm endorsement is required. The deductible shall be a maximum of three percent (3%) of the insured value.

.8 A Surety authorized to do business in the State of Alabama shall furnish the required Insurance.

.9 The standard ACORD™ format shall be provided. The ACORD™ Certificate must be signed or countersigned by a Licensed Resident Agent of the State of Alabama and the agent's name, address and telephone number must appear on the face of the certificate.

.10 The Surety must have a minimum rating of A/Class VI as reported in the latest issue of Best's Key Rating Guide Property-Casualty, published by Alfred M. Best Company, Inc. if the bid price exceeds $50,000.00.

.11 Contractor shall procure and maintain insurance as specified above:

.1 The insurance shall be written for not less than limits of liability specified in the Contract Documents or required by law, whichever coverage is greater. Coverages, whether written on an occurrence or claims-made basis, shall be maintained without interruption from the date of commencement of the Work until the date of final payment and termination of any coverage required to be maintained after final payment, and, with respect to the Contractor's completed operations coverage, until the expiration of the period for correction of Work or for such other period for maintenance of completed operations coverage as specified in the Contract Documents.

.2 Certificates of insurance acceptable to the City shall be filed with the City within ten (10) calendar days from date of issuance of contract forms for execution. Contractor shall deliver to the City of Mobile, certificates of insurance certifying the existence and limits of the insurance coverages along with separate policy endorsements.

.3 Contractor shall also be responsible for delivering policy renewal certificates to the City of Mobile, and thereafter upon renewal or replacement of each required policy of insurance.

.4 These certificates and the insurance policies shall contain a provision that coverages afforded under the policies will not be cancelled subject to non-renewal nor material change, or allowed to expire without at least thirty (30) days' (except ten (10) days from non-payment) prior written notice has been given to the City.

.5 An additional certificate evidencing continuation of liability coverage, including coverage for completed operations, shall be submitted with the final Application for Payment and thereafter upon renewal or replacement of such coverage until the expiration of the time. Information concerning reduction of coverage on account of revised limits or claims paid under the General Aggregate, or both, shall be furnished by the Contractor with reasonable promptness.

.12 All policies of insurance, except worker's compensation, shall be endorsed to provide that all such insurances are primary and non-contributing with any other insurance maintained by the City of Mobile and endorsed to waive rights of subrogation in favor of the City of Mobile.

.13 The Contractor shall cause the commercial liability coverage required by the Contract Documents to include (1) the City, the Design Consultant/ Engineer and the Design Consultant's/Engineer's Consultants as additional insureds for claims caused in whole or in part by the Contractor's negligent acts or omissions during the Contractor's

AIA Document A101 – 2017. Copyright © 1915, 1918, 1925, 1937, 1951, 1958, 1961, 1963, 1967, 1974, 1977, 1987, 1991, 1997, 2007 and 2017. All rights reserved. "The American Institute of Architects," "American Institute of Architects," "AIA," the AIA Logo, and "AIA Contract Documents" are trademarks of The American Institute of Architects. This document was produced at 20:47:31 CDT on 06/16/2026 under Subscription No.20240042832 which expires on 07/01/2026, is not for resale, is licensed for one-time use only, and may only be used in accordance with the AIA Contract Documents® Terms of Service. To report copyright violations, e-mail docinfo@aiacontracts.com.
User Notes:
(6a31b62497654e828ab1dc45)

operations; and (2) the City as an additional insured for claims caused in whole or in part by the Contractor's negligent acts or omissions during the Contractor's completed operations.

§ 8.5.3 Bonds The Contractor shall provide bonds as set forth below:

.1 Contractor shall furnish bonds covering faithful performance of the Contract and payment of obligations arising thereunder.

.2 Upon the request of any person or entity appearing to be a potential beneficiary of bonds covering payment of obligations arising under the Contract, the Contractor shall promptly furnish a copy of the bonds or shall authorize a copy to be furnished.

.3 The Labor and Material Payment Bond and the Performance Bond shall each be for one hundred percent (100%) of the Contract Sum.

.1 Bond shall be submitted with the executed agreement on provided form(s).
.2 Power of Attorney is required for both bonds.
.3 A Surety authorized to do business in the State of Alabama shall furnish both bonds.
.4 A Surety licensed to do business in the State of Alabama must execute the bonds.
.5 The Surety must have a minimum rating of A/Class VI as reported in the latest issue of Best's Key Rating Guide Property-Casualty, published by Alfred M. Best Company, Inc., if the bid price exceeds $50,000.00.
.6 The Surety company shall be required to execute AIA Document G-707, "Consent of Surety to Final Payment" prior to Final Payment being made to the Contractor.

§ 8.7 Warranties
Contractor shall provide a minimum one (1) years warranty from the date of substantial completion of all Labor and Materials for the Work covered by this contract, unless otherwise specified. Labor and Material warranties required by other sections of the construction document shall not conflict with this provision. The most stringent warranty provision shall apply.

§ 8.8 Force Majeure
In the event that either party hereto shall be delayed or hindered in or prevented from the performance of any act required hereunder by reason of strikes, lockouts, labor troubles, inability to procure materials, failure of power, restrictive governmental laws or regulations, riots, insurrection, war, Act of God, or other reason of a like nature not the fault of the party delayed in performing work or doing acts required under the terms of this Agreement, then performance of such act shall be excused for the period of the delay and the period for the performance of any such act shall be extended for a period equivalent to the period of such delay.

ARTICLE 9 ENUMERATION OF CONTRACT DOCUMENTS

§ 9.1 This Agreement is comprised of the following documents:

.1 AIA Document A101™–2017, Standard Form of Agreement Between Owner and Contractor

.2 AIA Document A201™–2017, General Conditions of the Contract for Construction

.3 Drawings- As provided in the City of Mobile CIP Trimmier Park Lights Upgrades Plan Set and Project Manual dated May 20, 2026 and Addenda

.4 Specifications- As provided in the City of Mobile CIP Trimmier Park Lights Upgrades Plan Set and Project Manual dated May 20, 2026 and Addenda

Portions of Addenda relating to bidding or proposal requirements are not part of the Contract Documents unless the bidding or proposal requirements are also enumerated in this Article 9.

.8 Other Exhibits:
Exhibit A: Office of Small Business Development Subcontracting and Major Supplier Plan
Exhibit B: Certificate of Liability Insurance
Exhibit C: Performance, Labor and Material Bonds
Exhibit D: E-Verify Documents
Exhibit E: Secretary of State
Exhibit F: Bidding And Contract Requirement Documents

AIA Document A101 – 2017. Copyright © 1915, 1918, 1925, 1937, 1951, 1958, 1961, 1963, 1967, 1974, 1977, 1987, 1991, 1997, 2007 and 2017. All rights reserved. "The American Institute of Architects," "American Institute of Architects," "AIA," the AIA Logo, and "AIA Contract Documents" are trademarks of The American Institute of Architects. This document was produced at 20:47:31 CDT on 06/16/2026 under Subscription No 20240042832 which expires on 07/01/2026, is not for resale, is licensed for one-time use only, and may only be used in accordance with the AIA Contract Documents® Terms of Service. To report copyright violations, e-mail docinfo@aiacontracts.com.
User Notes: (6a31b62497654e828ab1dc45)

§ 9.2.2 Best Management Practices (BMPs): The Contractor shall be responsible for providing, implementing and maintaining BMPs for sediment and erosion control in full compliance with all applicable Local, State and Federal Codes and Ordinances throughout the contract period. All Work shall be in accordance with the Clean Water Act; the Alabama Water Pollution Control Act; the current version of the Alabama Handbook for Erosion Control, Sediment Control Storm water Management on Construction sites and Urban Areas; and the current version of the Mobile, Alabama City Code Chapter 17 Storm water Management and Flood Control. All Wastewater with oils, grease, paint, mortar, etc., shall be properly contained and disposed of.

§ 9.2.3 Contractor shall comply with all Federal, State and local laws concerning nondiscrimination, including but not limited to City of Mobile Ordinance No. 14-034 which requires, *inter alia*, that all contractors performing work for the City of Mobile not discriminate on the basis of race, creed, color, national origin or disability, require that all subcontractors they engage do the same, and make every reasonable effort to assure that fifteen percent of the work performed under contract be awarded to socially and economically disadvantaged individuals and business entities.

§ 9.2.4 By signing this contract, the contracting parties affirm, for the duration of the agreement, that they will not violate federal immigration law or knowingly employ, hire for employment, or continue to employ an unauthorized alien within the State of Alabama. Furthermore, a contracting party found to be in violation of this provision shall be deemed in breach of the agreement and shall be responsible for all damages resulting therefrom.

§ 9.2.5 Public Contracts with Entities Engaging in certain Boycott Activities
By signing this contract, the Contractor further represents and agrees that it is not currently engaged in, nor will it engage in, any boycott of a person or entity based in or doing business with a jurisdiction with which the State of Alabama can enjoy open trade.

§ 9.2.6 Severability Clause
In case any one or more of the provisions contained in this Agreement shall for any reason be held to be invalid, illegal or unenforceable in any respect, such invalidity, illegality or unenforceability shall not affect any other provisions of this Agreement, but this Agreement shall be construed as if such invalid or illegal or unenforceable provision had never been contained herein. Upon such determination that any term or other provision is invalid, illegal or unenforceable, the court or other tribunal making such determination is authorized and instructed to modify this Agreement so as to effect the original intent of the parties as closely as possible so that the transactions and agreements contemplated herein are consummated as originally contemplated to the fullest extent possible.

§ 9.2.7 Non-Agency Clause
Contractor, in the performance of its operations and obligations hereunder, shall not be deemed to be an agent of City but shall be deemed to be an independent Contractor in every respect and shall take all steps at its own expense, as City may from time to time request, to indicate that it is an independent Contractor. City does not and will not assume any responsibility for the means by which or the manner in which the services by Contractor provided for herein are performed, but on the contrary, Contractor shall be wholly responsible therefore.

ARTICLE 10 USE OF CITY PROJECT MANAGEMENT SOFTWARE (E-BUILDER)

§ 10.1 The City of Mobile utilizes e-Builder, a cloud-based Construction Project Management Information System (PMIS) that streamlines every aspect of construction projects, including planning, estimating, document control, construction, and closeout. The Contractor shall participate in a City-provided training session on the use of e-Builder. This training is mandatory for all personnel responsible for submitting schedules, pay applications, submittals, Requests for Information (RFIs), and other project-related documentation through the e-Builder platform. Training will be provided by the City at no cost to the Contractor. Failure to complete the required training may be considered a material breach of this Agreement, and may delay processing of project documentation.

AIA Document A101 – 2017. Copyright © 1915, 1918, 1925, 1937, 1951, 1958, 1961, 1963, 1967, 1974, 1977, 1987, 1991, 1997, 2007 and 2017. All rights reserved. "The American Institute of Architects," "American Institute of Architects," "AIA," the AIA Logo, and "AIA Contract Documents" are trademarks of The American Institute of Architects. This document was produced at 20:47:31 CDT on 06/16/2026 under Subscription No.20240042832 which expires on 07/01/2026, is not for resale, is licensed for one-time use only, and may only be used in accordance with the AIA Contract Documents® Terms of Service. To report copyright violations, e-mail docinfo@aiacontracts.com.
User Notes:
(6a31b62497654e828ab1dc45)

This Agreement entered into as of the day and year of last execution:

CONTRACTOR: BILL SMITH ELECTRIC, INC.

NAME, TITLE
Michael C. Smith, Vice President

State of Florida
County of Escambia

I, Bryan F. Harper , a Notary Public in and for said County in said State, hereby certify that Michael C. Smith whose name as Vice President of the BILL SMITH ELECTRIC, INC., a Florida corporation, is signed to the foregoing conveyance, and who is known to me, acknowledged before me on this day that, being informed of the contents of the conveyance, he, as such officer and with full authority, executed the same voluntarily for and as the act of said corporation.

Given under my hand this 22nd day of June . 2026 .

(Seal)

BRYAN F. HARPER
Notary Public-State of Florida
Commission # HH 792544
My Commission Expires
June 03, 2030

Notary Public

My commission expires: June 03, 2030

CITY OF MOBILE

By:_____
Spiro N. Cheriogotis, Mayor

Date:_____

ATTEST:

_____
City Clerk

AIA Document A101 – 2017. Copyright © 1915, 1918, 1925, 1937, 1951, 1958, 1961, 1963, 1967, 1974, 1977, 1987, 1991, 1997, 2007 and 2017. All rights reserved. "The American Institute of Architects," "American Institute of Architects," "AIA," the AIA Logo, and "AIA Contract Documents" are trademarks of The American Institute of Architects. This document was produced at 20:47:31 CDT on 06/16/2026 under Subscription No 20240042832 which expires on 07/01/2026, is not for resale, is licensed for one-time use only, and may only be used in accordance with the AIA Contract Documents® Terms of Service. To report copyright violations, e-mail docinfo@aiacontracts.com.
User Notes:
(6a31b62497654e828ab1dc45)

AIA® Document A201® – 2017

General Conditions of the Contract for Construction

for the following PROJECT:
(Name and location or address)

CIP Trimmier Park Lights Upgrade
3600 Alba Club Road
Mobile, AL 36605
PR- 068-24

THE OWNER:
(Name, legal status and address)

City of Mobile
P. O. Box 1827
Mobile, AL 36633-1827

THE DESIGN CONSULTANT:
(Name, legal status and address)

Jaguar Consulting, LLC
8658 Capital Drive North
Mobile, AL 36695

TABLE OF ARTICLES

1 GENERAL PROVISIONS

2 OWNER

3 CONTRACTOR

4 ARCHITECT

5 SUBCONTRACTORS

6 CONSTRUCTION BY OWNER OR BY SEPARATE CONTRACTORS

7 CHANGES IN THE WORK

8 TIME

9 PAYMENTS AND COMPLETION

10 PROTECTION OF PERSONS AND PROPERTY

11 INSURANCE AND BONDS

12 UNCOVERING AND CORRECTION OF WORK

ADDITIONS AND DELETIONS:
The author of this document may have revised the text of the original AIA standard form. An *Additions and Deletions Report* that notes revisions to the standard form text is available from the author and should be reviewed. A vertical line in the left margin of this document indicates where the author has added to or deleted from the original AIA text.

This document has important legal consequences. Consultation with an attorney is encouraged with respect to its completion or modification.

For guidance in modifying this document to include supplementary conditions, see AIA Document A503™–2017, Guide for Supplementary Conditions.

AIA Document A201 – 2017. Copyright © 1911, 1915, 1918, 1925, 1937, 1951, 1958, 1961, 1963, 1966, 1970, 1976, 1987, 1997, 2007 and 2017. All rights reserved. "The American Institute of Architects," "American Institute of Architects," "AIA," the AIA Logo, and "AIA Contract Documents" are trademarks of The American Institute of Architects. This document was produced at 15:45:22 CDT on 05/11/2026 under Subscription No.20240042832 which expires on 07/01/2026, is not for resale, is licensed for one-time use only, and may only be used in accordance with the AIA Contract Documents® Terms of Service. To report copyright violations, e-mail docinfo@aiacontracts.com.
User Notes: (69f1008b5f1b2d23ced2487a)

13 MISCELLANEOUS PROVISIONS

14 TERMINATION OR SUSPENSION OF THE CONTRACT

15 CLAIMS AND DISPUTES

AIA Document A201 – 2017. Copyright © 1911, 1915, 1918, 1925, 1937, 1951, 1958, 1961, 1963, 1966, 1970, 1976, 1987, 1997, 2007 and 2017. All rights reserved. "The American Institute of Architects," "American Institute of Architects," "AIA," the AIA Logo, and "AIA Contract Documents" are trademarks of The American Institute of Architects. This document was produced at 15:45:22 CDT on 05/11/2026 under Subscription No.20240042832 which expires on 07/01/2026, is not for resale, is licensed for one-time use only, and may only be used in accordance with the AIA Contract Documents® Terms of Service. To report copyright violations, e-mail docinfo@aiacontracts.com.
User Notes: (69f1008b5f1b2d23ced2487a)

INDEX
(Topics and numbers in bold are Section headings.)

Acceptance of Nonconforming Work
9.6.6, 9.9.3, **12.3**
Acceptance of Work
9.6.6, 9.8.2, 9.9.3, 9.10.1, 9.10.3, 12.3
Access to Work
3.16, 6.2.1, 12.1
Accident Prevention
10
Acts and Omissions
3.2, 3.3.2, 3.12.8, 3.18, 4.2.3, 8.3.1, 9.5.1, 10.2.5, 10.2.8, 13.3.2, 14.1, 15.1.2, 15.2
Addenda
1.1.1
Additional Costs, Claims for
3.7.4, 3.7.5, 10.3.2, 15.1.5
Additional Inspections and Testing
9.4.2, 9.8.3, 12.2.1, **13.4**
Additional Time, Claims for
3.2.4, 3.7.4, 3.7.5, 3.10.2, 8.3.2, **15.1.6**
Administration of the Contract
3.1.3, **4.2**, 9.4, 9.5
Advertisement or Invitation to Bid
1.1.1
Aesthetic Effect
4.2.13
Allowances
3.8
Applications for Payment
4.2.5, 7.3.9, 9.2, **9.3**, 9.4, 9.5.1, 9.5.4, 9.6.3, 9.7, 9.10
Approvals
2.1.1, 2.3.1, 2.5, 3.1.3, 3.10.2, 3.12.8, 3.12.9, 3.12.10.1, 4.2.7, 9.3.2, 13.4.1
Arbitration
8.3.1, 15.3.2, **15.4**
ARCHITECT
4
Architect, Definition of
4.1.1
Architect, Extent of Authority
2.5, 3.12.7, 4.1.2, 4.2, 5.2, 6.3, 7.1.2, 7.3.4, 7.4, 9.2, 9.3.1, 9.4, 9.5, 9.6.3, 9.8, 9.10.1, 9.10.3, 12.1, 12.2.1, 13.4.1, 13.4.2, 14.2.2, 14.2.4, 15.1.4, 15.2.1
Architect, Limitations of Authority and Responsibility
2.1.1, 3.12.4, 3.12.8, 3.12.10, 4.1.2, 4.2.1, 4.2.2, 4.2.3, 4.2.6, 4.2.7, 4.2.10, 4.2.12, 4.2.13, 5.2.1, 7.4, 9.4.2, 9.5.4, 9.6.4, 15.1.4, 15.2
Architect's Additional Services and Expenses
2.5, 12.2.1, 13.4.2, 13.4.3, 14.2.4
Architect's Administration of the Contract
3.1.3, 3.7.4, 15.2, 9.4.1, 9.5
Architect's Approvals
2.5, 3.1.3, 3.5, 3.10.2, 4.2.7
Architect's Authority to Reject Work
3.5, 4.2.6, 12.1.2, 12.2.1
Architect's Copyright
1.1.7, 1.5
Architect's Decisions
3.7.4, 4.2.6, 4.2.7, 4.2.11, 4.2.12, 4.2.13, 4.2.14, 6.3, 7.3.4, 7.3.9, 8.1.3, 8.3.1, 9.2, 9.4.1, 9.5, 9.8.4, 9.9.1, 13.4.2, 15.2
Architect's Inspections
3.7.4, 4.2.2, 4.2.9, 9.4.2, 9.8.3, 9.9.2, 9.10.1, 13.4
Architect's Instructions
3.2.4, 3.3.1, 4.2.6, 4.2.7, 13.4.2
Architect's Interpretations
4.2.11, 4.2.12
Architect's Project Representative
4.2.10
Architect's Relationship with Contractor
1.1.2, 1.5, 2.3.3, 3.1.3, 3.2.2, 3.2.3, 3.2.4, 3.3.1, 3.4.2, 3.5, 3.7.4, 3.7.5, 3.9.2, 3.9.3, 3.10, 3.11, 3.12, 3.16, 3.18, 4.1.2, 4.2, 5.2, 6.2.2, 7, 8.3.1, 9.2, 9.3, 9.4, 9.5, 9.7, 9.8, 9.9, 10.2.6, 10.3, 11.3, 12, 13.3.2, 13.4, 15.2
Architect's Relationship with Subcontractors
1.1.2, 4.2.3, 4.2.4, 4.2.6, 9.6.3, 9.6.4, 11.3
Architect's Representations
9.4.2, 9.5.1, 9.10.1
Architect's Site Visits
3.7.4, 4.2.2, 4.2.9, 9.4.2, 9.5.1, 9.9.2, 9.10.1, 13.4
Asbestos
10.3.1
Attorneys' Fees
3.18.1, 9.6.8, 9.10.2, 10.3.3
Award of Separate Contracts
6.1.1, 6.1.2
Award of Subcontracts and Other Contracts for Portions of the Work
5.2
Basic Definitions
1.1
Bidding Requirements
1.1.1
Binding Dispute Resolution
8.3.1, 9.7, 11.5, 13.1, 15.1.2, 15.1.3, 15.2.1, 15.2.5, 15.2.6.1, 15.3.1, 15.3.2, 15.3.3, 15.4.1
Bonds, Lien
7.3.4.4, 9.6.8, 9.10.2, 9.10.3
Bonds, Performance, and Payment
7.3.4.4, 9.6.7, 9.10.3, **11.1.2**, 11.1.3, **11.5**
Building Information Models Use and Reliance
1.8
Building Permit
3.7.1
Capitalization
1.3
Certificate of Substantial Completion
9.8.3, 9.8.4, 9.8.5
Certificates for Payment
4.2.1, 4.2.5, 4.2.9, 9.3.3, **9.4**, 9.5, 9.6.1, 9.6.6, 9.7, 9.10.1, 9.10.3, 14.1.1.3, 14.2.4, 15.1.4
Certificates of Inspection, Testing or Approval
13.4.4
Certificates of Insurance
9.10.2
Change Orders

AIA Document A201 – 2017. Copyright © 1911, 1915, 1918, 1925, 1937, 1951, 1958, 1961, 1963, 1966, 1970, 1976, 1987, 1997, 2007 and 2017. All rights reserved. "The American Institute of Architects," "American Institute of Architects," "AIA," the AIA Logo, and "AIA Contract Documents" are trademarks of The American Institute of Architects. This document was produced at 15:45:22 CDT on 05/11/2026 under Subscription No.20240042832 which expires on 07/01/2026, is not for resale, is licensed for one-time use only, and may only be used in accordance with the AIA Contract Documents® Terms of Service. To report copyright violations, e-mail docinfo@aiacontracts.com.
User Notes: (69f1008b5f1b2d23ced2487a)

1.1.1, 3.4.2, 3.7.4, 3.8.2.3, 3.11, 3.12.8, 4.2.8, 5.2.3, 7.1.2, 7.1.3, **7.2**, 7.3.2, 7.3.7, 7.3.9, 7.3.10, 8.3.1, 9.3.1.1, 9.10.3, 10.3.2, 11.2, 11.5, 12.1.2
Change Orders, Definition of
7.2.1
CHANGES IN THE WORK
2.2.2, 3.11, 4.2.8, **7**, 7.2.1, 7.3.1, 7.4, 8.3.1, 9.3.1.1, 11.5
Claims, Definition of
15.1.1
Claims, Notice of
1.6.2, 15.1.3
CLAIMS AND DISPUTES
3.2.4, 6.1.1, 6.3, 7.3.9, 9.3.3, 9.10.4, 10.3.3, **15**, 15.4
Claims and Timely Assertion of Claims
15.4.1
Claims for Additional Cost
3.2.4, 3.3.1, 3.7.4, 7.3.9, 9.5.2, 10.2.5, 10.3.2, **15.1.5**
Claims for Additional Time
3.2.4, 3.3.1, 3.7.4, 6.1.1, 8.3.2, 9.5.2, 10.3.2, **15.1.6**
Concealed or Unknown Conditions, Claims for
3.7.4
Claims for Damages
3.2.4, 3.18, 8.3.3, 9.5.1, 9.6.7, 10.2.5, 10.3.3, 11.3, 11.3.2, 14.2.4, 15.1.7
Claims Subject to Arbitration
15.4.1
Cleaning Up
3.15, 6.3
Commencement of the Work, Conditions Relating to
2.2.1, 3.2.2, 3.4.1, 3.7.1, 3.10.1, 3.12.6, 5.2.1, 5.2.3, 6.2.2, 8.1.2, 8.2.2, 8.3.1, 11.1, 11.2, **15.1.5**
Commencement of the Work, Definition of
8.1.2
Communications
3.9.1, **4.2.4**
Completion, Conditions Relating to
3.4.1, 3.11, 3.15, 4.2.2, 4.2.9, 8.2, 9.4.2, 9.8, 9.9.1, 9.10, 12.2, 14.1.2, 15.1.2
COMPLETION, PAYMENTS AND
9
Completion, Substantial
3.10.1, 4.2.9, 8.1.1, 8.1.3, 8.2.3, 9.4.2, 9.8, 9.9.1, 9.10.3, 12.2, 15.1.2
Compliance with Laws
2.3.2, 3.2.3, 3.6, 3.7, 3.12.10, 3.13, 9.6.4, 10.2.2, 13.1, 13.3, 13.4.1, 13.4.2, 13.5, 14.1.1, 14.2.1.3, 15.2.8, 15.4.2, 15.4.3
Concealed or Unknown Conditions
3.7.4, 4.2.8, 8.3.1, 10.3
Conditions of the Contract
1.1.1, 6.1.1, 6.1.4
Consent, Written
3.4.2, 3.14.2, 4.1.2, 9.8.5, 9.9.1, 9.10.2, 9.10.3, 13.2, 15.4.4.2
Consolidation or Joinder
15.4.4
CONSTRUCTION BY OWNER OR BY SEPARATE CONTRACTORS
1.1.4, **6**
Construction Change Directive, Definition of
7.3.1
Construction Change Directives
1.1.1, 3.4.2, 3.11, 3.12.8, 4.2.8, 7.1.1, 7.1.2, 7.1.3, **7.3**, 9.3.1.1
Construction Schedules, Contractor's
3.10, 3.11, 3.12.1, 3.12.2, 6.1.3, 15.1.6.2
Contingent Assignment of Subcontracts
5.4, 14.2.2.2
Continuing Contract Performance
15.1.4
Contract, Definition of
1.1.2
CONTRACT, TERMINATION OR SUSPENSION OF THE
5.4.1.1, 5.4.2, 11.5, **14**
Contract Administration
3.1.3, 4, 9.4, 9.5
Contract Award and Execution, Conditions Relating to
3.7.1, 3.10, 5.2, 6.1
Contract Documents, Copies Furnished and Use of
1.5.2, 2.3.6, 5.3
Contract Documents, Definition of
1.1.1
Contract Sum
2.2.2, 2.2.4, 3.7.4, 3.7.5, 3.8, 3.10.2, 5.2.3, 7.3, 7.4, **9.1**, 9.2, 9.4.2, 9.5.1.4, 9.6.7, 9.7, 10.3.2, 11.5, 12.1.2, 12.3, 14.2.4, 14.3.2, 15.1.4.2, **15.1.5, 15.2.5**
Contract Sum, Definition of
9.1
Contract Time
1.1.4, 2.2.1, 2.2.2, 3.7.4, 3.7.5, 3.10.2, 5.2.3, 6.1.5, 7.2.1.3, 7.3.1, 7.3.5, 7.3.6, 7, 7, 7.3.10, 7.4, 8.1.1, 8.2.1, 8.2.3, 8.3.1, 9.5.1, 9.7, 10.3.2, 12.1.1, 12.1.2, 14.3.2, 15.1.4.2, 15.1.6.1, 15.2.5
Contract Time, Definition of
8.1.1
CONTRACTOR
3
Contractor, Definition of
3.1, 6.1.2
Contractor's Construction and Submittal Schedules
3.10, 3.12.1, 3.12.2, 4.2.3, 6.1.3, 15.1.6.2
Contractor's Employees
2.2.4, 3.3.2, 3.4.3, 3.8.1, 3.9, 3.18.2, 4.2.3, 4.2.6, 10.2, 10.3, 11.3, 14.1, 14.2.1.1
Contractor's Liability Insurance
11.1
Contractor's Relationship with Separate Contractors and Owner's Forces
3.12.5, 3.14.2, 4.2.4, 6, 11.3, 12.2.4
Contractor's Relationship with Subcontractors
1.2.2, 2.2.4, 3.3.2, 3.18.1, 3.18.2, 4.2.4, 5, 9.6.2, 9.6.7, 9.10.2, 11.2, 11.3, 11.4
Contractor's Relationship with the Architect
1.1.2, 1.5, 2.3.3, 3.1.3, 3.2.2, 3.2.3, 3.2.4, 3.3.1, 3.4.2, 3.5.1, 3.7.4, 3.10, 3.11, 3.12, 3.16, 3.18, 4.2, 5.2, 6.2.2, 7, 8.3.1, 9.2, 9.3, 9.4, 9.5, 9.7, 9.8, 9.9, 10.2.6,

AIA Document A201 – 2017. Copyright © 1911, 1915, 1918, 1925, 1937, 1951, 1958, 1961, 1963, 1966, 1970, 1976, 1987, 1997, 2007 and 2017. All rights reserved. "The American Institute of Architects," "American Institute of Architects," "AIA," the AIA Logo, and "AIA Contract Documents" are trademarks of The American Institute of Architects. This document was produced at 15:45:22 CDT on 05/11/2026 under Subscription No.20240042832 which expires on 07/01/2026, is not for resale, is licensed for one-time use only, and may only be used in accordance with the AIA Contract Documents® Terms of Service. To report copyright violations, e-mail docinfo@aiacontracts.com.
User Notes: (69f1008b5f1b2d23ced2487a)

10.3, 11.3, 12, 13.4, 15.1.3, 15.2.1
Contractor's Representations
3.2.1, 3.2.2, 3.5, 3.12.6, 6.2.2, 8.2.1, 9.3.3, 9.8.2
Contractor's Responsibility for Those Performing the Work
3.3.2, 3.18, 5.3, 6.1.3, 6.2, 9.5.1, 10.2.8
Contractor's Review of Contract Documents
3.2
Contractor's Right to Stop the Work
2.2.2, 9.7
Contractor's Right to Terminate the Contract
14.1
Contractor's Submittals
3.10, 3.11, 3.12, 4.2.7, 5.2.1, 5.2.3, 9.2, 9.3, 9.8.2, 9.8.3, 9.9.1, 9.10.2, 9.10.3
Contractor's Superintendent
3.9, 10.2.6
Contractor's Supervision and Construction Procedures
1.2.2, 3.3, 3.4, 3.12.10, 4.2.2, 4.2.7, 6.1.3, 6.2.4, 7.1.3, 7.3.4, 7.3.6, 8.2, 10, 12, 14, 15.1.4
Coordination and Correlation
1.2, 3.2.1, 3.3.1, 3.10, 3.12.6, 6.1.3, 6.2.1
Copies Furnished of Drawings and Specifications
1.5, 2.3.6, 3.11
Copyrights
1.5, **3.17**
Correction of Work
2.5, 3.7.3, 9.4.2, 9.8.2, 9.8.3, 9.9.1, 12.1.2, **12.2**, 12.3, 15.1.3.1, 15.1.3.2, 15.2.1
Correlation and Intent of the Contract Documents
1.2
Cost, Definition of
7.3.4
Costs
2.5, 3.2.4, 3.7.3, 3.8.2, 3.15.2, 5.4.2, 6.1.1, 6.2.3, 7.3.3.3, 7.3.4, 7.3.8, 7.3.9, 9.10.2, 10.3.2, 10.3.6, 11.2, 12.1.2, 12.2.1, 12.2.4, 13.4, 14
Cutting and Patching
3.14, 6.2.5
Damage to Construction of Owner or Separate Contractors
3.14.2, 6.2.4, 10.2.1.2, 10.2.5, 10.4, 12.2.4
Damage to the Work
3.14.2, 9.9.1, 10.2.1.2, 10.2.5, 10.4, 12.2.4
Damages, Claims for
3.2.4, 3.18, 6.1.1, 8.3.3, 9.5.1, 9.6.7, 10.3.3, 11.3.2, 11.3, 14.2.4, 15.1.7
Damages for Delay
6.2.3, 8.3.3, 9.5.1.6, 9.7, 10.3.2, 14.3.2
Date of Commencement of the Work, Definition of
8.1.2
Date of Substantial Completion, Definition of
8.1.3
Day, Definition of
8.1.4
Decisions of the Architect
3.7.4, 4.2.6, 4.2.7, 4.2.11, 4.2.12, 4.2.13, 6.3, 7.3.4, 7.3.9, 8.1.3, 8.3.1, 9.2, 9.4, 9.5.1, 9.8.4, 9.9.1, 13.4.2, 14.2.2, 14.2.4, 15.1, 15.2
Decisions to Withhold Certification
9.4.1, **9.5**, 9.7, 14.1.1.3
Defective or Nonconforming Work, Acceptance, Rejection and Correction of
2.5, 3.5, 4.2.6, 6.2.3, 9.5.1, 9.5.3, 9.6.6, 9.8.2, 9.9.3, 9.10.4, 12.2.1
Definitions
1.1, 2.1.1, 3.1.1, 3.5, 3.12.1, 3.12.2, 3.12.3, 4.1.1, 5.1, 6.1.2, 7.2.1, 7.3.1, 8.1, 9.1, 9.8.1, 15.1.1
Delays and Extensions of Time
3.2, **3.7.4**, 5.2.3, 7.2.1, 7.3.1, **7.4**, **8.3**, 9.5.1, **9.7**, 10.3.2, **10.4**, 14.3.2, **15.1.6**, 15.2.5
Digital Data Use and Transmission
1.7
Disputes
6.3, 7.3.9, 15.1, 15.2
Documents and Samples at the Site
3.11
Drawings, Definition of
1.1.5
Drawings and Specifications, Use and Ownership of
3.11
Effective Date of Insurance
8.2.2
Emergencies
10.4, 14.1.1.2, **15.1.5**
Employees, Contractor's
3.3.2, 3.4.3, 3.8.1, 3.9, 3.18.2, 4.2.3, 4.2.6, 10.2, 10.3.3, 11.3, 14.1, 14.2.1.1
Equipment, Labor, or Materials
1.1.3, 1.1.6, 3.4, 3.5, 3.8.2, 3.8.3, 3.12, 3.13, 3.15.1, 4.2.6, 4.2.7, 5.2.1, 6.2.1, 7.3.4, 9.3.2, 9.3.3, 9.5.1.3, 9.10.2, 10.2.1, 10.2.4, 14.2.1.1, 14.2.1.2
Execution and Progress of the Work
1.1.3, 1.2.1, 1.2.2, 2.3.4, 2.3.6, 3.1, 3.3.1, 3.4.1, 3.7.1, 3.10.1, 3.12, 3.14, 4.2, 6.2.2, 7.1.3, 7.3.6, 8.2, 9.5.1, 9.9.1, 10.2, 10.3, 12.1, 12.2, 14.2, 14.3.1, 15.1.4
Extensions of Time
3.2.4, 3.7.4, 5.2.3, 7.2.1, 7.3, 7.4, 9.5.1, 9.7, 10.3.2, 10.4, 14.3, 15.1.6, **15.2.5**
Failure of Payment
9.5.1.3, **9.7**, 9.10.2, 13.5, 14.1.1.3, 14.2.1.2
Faulty Work
(See Defective or Nonconforming Work)
Final Completion and Final Payment
4.2.1, 4.2.9, 9.8.2, **9.10**, 12.3, 14.2.4, 14.4.3
Financial Arrangements, Owner's
2.2.1, 13.2.2, 14.1.1.4
GENERAL PROVISIONS
1
Governing Law
13.1
Guarantees (See Warranty)
Hazardous Materials and Substances
10.2.4, **10.3**
Identification of Subcontractors and Suppliers
5.2.1
Indemnification
3.17, **3.18**, 9.6.8, 9.10.2, 10.3.3, 11.3
Information and Services Required of the Owner

AIA Document A201 – 2017. Copyright © 1911, 1915, 1918, 1925, 1937, 1951, 1958, 1961, 1963, 1966, 1970, 1976, 1987, 1997, 2007 and 2017. All rights reserved. "The American Institute of Architects," "American Institute of Architects," "AIA," the AIA Logo, and "AIA Contract Documents" are trademarks of The American Institute of Architects. This document was produced at 15:45:22 CDT on 05/11/2026 under Subscription No.20240042832 which expires on 07/01/2026, is not for resale, is licensed for one-time use only, and may only be used in accordance with the AIA Contract Documents® Terms of Service. To report copyright violations, e-mail docinfo@aiacontracts.com.
User Notes: (69f1008b5f1b2d23ced2487a)

2.1.2, **2.2**, 2.3, 3.2.2, 3.12.10.1, 6.1.3, 6.1.4, 6.2.5, 9.6.1, 9.9.2, 9.10.3, 10.3.3, 11.2, 13.4.1, 13.4.2, 14.1.1.4, 14.1.4, 15.1.4
Initial Decision
15.2
Initial Decision Maker, Definition of
1.1.8
Initial Decision Maker, Decisions
14.2.4, 15.1.4.2, 15.2.1, 15.2.2, 15.2.3, 15.2.4, 15.2.5
Initial Decision Maker, Extent of Authority
14.2.4, 15.1.4.2, 15.2.1, 15.2.2, 15.2.3, 15.2.4, 15.2.5
Injury or Damage to Person or Property
10.2.8, 10.4
Inspections
3.1.3, 3.3.3, 3.7.1, 4.2.2, 4.2.6, 4.2.9, 9.4.2, 9.8.3, 9.9.2, 9.10.1, 12.2.1, 13.4
Instructions to Bidders
1.1.1
Instructions to the Contractor
3.2.4, 3.3.1, 3.8.1, 5.2.1, 7, 8.2.2, 12, 13.4.2
Instruments of Service, Definition of
1.1.7
Insurance
6.1.1, 7.3.4, 8.2.2, 9.3.2, 9.8.4, 9.9.1, 9.10.2, 10.2.5, **11**
Insurance, Notice of Cancellation or Expiration
11.1.4, 11.2.3
Insurance, Contractor's Liability
11.1
Insurance, Effective Date of
8.2.2, 14.4.2
Insurance, Owner's Liability
11.2
Insurance, Property
10.2.5, 11.2, 11.4, 11.5
Insurance, Stored Materials
9.3.2
INSURANCE AND BONDS
11
Insurance Companies, Consent to Partial Occupancy
9.9.1
Insured loss, Adjustment and Settlement of
11.5
Intent of the Contract Documents
1.2.1, 4.2.7, 4.2.12, 4.2.13
Interest
13.5
Interpretation
1.1.8, 1.2.3, **1.4**, 4.1.1, 5.1, 6.1.2, 15.1.1
Interpretations, Written
4.2.11, 4.2.12
Judgment on Final Award
15.4.2
Labor and Materials, Equipment
1.1.3, 1.1.6, **3.4**, 3.5, 3.8.2, 3.8.3, 3.12, 3.13, 3.15.1, 5.2.1, 6.2.1, 7.3.4, 9.3.2, 9.3.3, 9.5.1.3, 9.10.2, 10.2.1, 10.2.4, 14.2.1.1, 14.2.1.2
Labor Disputes
8.3.1
Laws and Regulations
1.5, 2.3.2, 3.2.3, 3.2.4, 3.6, 3.7, 3.12.10, 3.13, 9.6.4, 9.9.1, 10.2.2, 13.1, 13.3.1, 13.4.2, 13.5, 14, 15.2.8, 15.4
Liens
2.1.2, 9.3.1, 9.3.3, 9.6.8, 9.10.2, 9.10.4, 15.2.8
Limitations, Statutes of
12.2.5, 15.1.2, 15.4.1.1
Limitations of Liability
3.2.2, 3.5, 3.12.10, 3.12.10.1, 3.17, 3.18.1, 4.2.6, 4.2.7, 6.2.2, 9.4.2, 9.6.4, 9.6.7, 9.6.8, 10.2.5, 10.3.3, 11.3, 12.2.5, 13.3.1
Limitations of Time
2.1.2, 2.2, 2.5, 3.2.2, 3.10, 3.11, 3.12.5, 3.15.1, 4.2.7, 5.2, 5.3, 5.4.1, 6.2.4, 7.3, 7.4, 8.2, 9.2, 9.3.1, 9.3.3, 9.4.1, 9.5, 9.6, 9.7, 9.8, 9.9, 9.10, 12.2, 13.4, 14, 15, 15.1.2, 15.1.3, 15.1.5
Materials, Hazardous
10.2.4, **10.3**
Materials, Labor, Equipment and
1.1.3, 1.1.6, 3.4.1, 3.5, 3.8.2, 3.8.3, 3.12, 3.13, 3.15.1, 5.2.1, 6.2.1, 7.3.4, 9.3.2, 9.3.3, 9.5.1.3, 9.10.2, 10.2.1.2, 10.2.4, 14.2.1.1, 14.2.1.2
Means, Methods, Techniques, Sequences and Procedures of Construction
3.3.1, 3.12.10, 4.2.2, 4.2.7, 9.4.2
Mechanic's Lien
2.1.2, 9.3.1, 9.3.3, 9.6.8, 9.10.2, 9.10.4, 15.2.8
Mediation
8.3.1, 15.1.3.2, 15.2.1, 15.2.5, 15.2.6, **15.3**, 15.4.1, 15.4.1.1
Minor Changes in the Work
1.1.1, 3.4.2, 3.12.8, 4.2.8, 7.1, **7.4**
MISCELLANEOUS PROVISIONS
13
Modifications, Definition of
1.1.1
Modifications to the Contract
1.1.1, 1.1.2, 2.5, 3.11, 4.1.2, 4.2.1, 5.2.3, 7, 8.3.1, 9.7, 10.3.2
Mutual Responsibility
6.2
Nonconforming Work, Acceptance of
9.6.6, 9.9.3, **12.3**
Nonconforming Work, Rejection and Correction of
2.4, 2.5, 3.5, 4.2.6, 6.2.4, 9.5.1, 9.8.2, 9.9.3, 9.10.4, 12.2
Notice
1.6, 1.6.1, 1.6.2, 2.1.2, 2.2.2., 2.2.3, 2.2.4, 2.5, 3.2.4, 3.3.1, 3.7.4, 3.7.5, 3.9.2, 3.12.9, 3.12.10, 5.2.1, 7.4, 8.2.2 9.6.8, 9.7, 9.10.1, 10.2.8, 10.3.2, 11.5, 12.2.2.1, 13.4.1, 13.4.2, 14.1, 14.2.2, 14.4.2, 15.1.3, 15.1.5, 15.1.6, 15.4.1
Notice of Cancellation or Expiration of Insurance
11.1.4, 11.2.3
Notice of Claims
1.6.2, 2.1.2, 3.7.4, 9.6.8, 10.2.8, **15.1.3**, 15.1.5, 15.1.6, 15.2.8, 15.3.2, 15.4.1
Notice of Testing and Inspections
13.4.1, 13.4.2
Observations, Contractor's

AIA Document A201 – 2017. Copyright © 1911, 1915, 1918, 1925, 1937, 1951, 1958, 1961, 1963, 1966, 1970, 1976, 1987, 1997, 2007 and 2017. All rights reserved. "The American Institute of Architects," "American Institute of Architects," "AIA," the AIA Logo, and "AIA Contract Documents" are trademarks of The American Institute of Architects. This document was produced at 15:45:22 CDT on 05/11/2026 under Subscription No.20240042832 which expires on 07/01/2026, is not for resale, is licensed for one-time use only, and may only be used in accordance with the AIA Contract Documents® Terms of Service. To report copyright violations, e-mail docinfo@aiacontracts.com.
User Notes: (69f1008b5f1b2d23ced2487a)

3.2, 3.7.4
Occupancy
2.3.1, 9.6.6, 9.8
Orders, Written
1.1.1, 2.4, 3.9.2, 7, 8.2.2, 11.5, 12.1, 12.2.2.1, 13.4.2, 14.3.1
OWNER
2
Owner, Definition of
2.1.1
Owner, Evidence of Financial Arrangements
2.2, 13.2.2, 14.1.1.4
Owner, Information and Services Required of the
2.1.2, **2.2**, 2.3, 3.2.2, 3.12.10, 6.1.3, 6.1.4, 6.2.5, 9.3.2, 9.6.1, 9.6.4, 9.9.2, 9.10.3, 10.3.3, 11.2, 13.4.1, 13.4.2, 14.1.1.4, 14.1.4, 15.1.4
Owner's Authority
1.5, 2.1.1, 2.3.32.4, 2.5, 3.4.2, 3.8.1, 3.12.10, 3.14.2, 4.1.2, 4.2.4, 4.2.9, 5.2.1, 5.2.4, 5.4.1, 6.1, 6.3, 7.2.1, 7.3.1, 8.2.2, 8.3.1, 9.3.2, 9.5.1, 9.6.4, 9.9.1, 9.10.2, 10.3.2, 11.4, 11.5, 12.2.2, 12.3, 13.2.2, 14.3, 14.4, 15.2.7
Owner's Insurance
11.2
Owner's Relationship with Subcontractors
1.1.2, 5.2, 5.3, 5.4, 9.6.4, 9.10.2, 14.2.2
Owner's Right to Carry Out the Work
2.5, 14.2.2
Owner's Right to Clean Up
6.3
Owner's Right to Perform Construction and to Award Separate Contracts
6.1
Owner's Right to Stop the Work
2.4
Owner's Right to Suspend the Work
14.3
Owner's Right to Terminate the Contract
14.2, 14.4
Ownership and Use of Drawings, Specifications and Other Instruments of Service
1.1.1, 1.1.6, 1.1.7, **1.5**, 2.3.6, 3.2.2, 3.11, 3.17, 4.2.12, 5.3
Partial Occupancy or Use
9.6.6, **9.9**
Patching, Cutting and
3.14, 6.2.5
Patents
3.17
Payment, Applications for
4.2.5, 7.3.9, 9.2, **9.3**, 9.4, 9.5, 9.6.3, 9.7, 9.8.5, 9.10.1, 14.2.3, 14.2.4, 14.4.3
Payment, Certificates for
4.2.5, 4.2.9, 9.3.3, **9.4**, 9.5, 9.6.1, 9.6.6, 9.7, 9.10.1, 9.10.3, 14.1.1.3, 14.2.4
Payment, Failure of
9.5.1.3, **9.7**, 9.10.2, 13.5, 14.1.1.3, 14.2.1.2
Payment, Final
4.2.1, 4.2.9, **9.10**, 12.3, 14.2.4, 14.4.3
Payment Bond, Performance Bond and
7.3.4.4, 9.6.7, 9.10.3, **11.1.2**
Payments, Progress
9.3, **9.6**, 9.8.5, 9.10.3, 14.2.3, 15.1.4
PAYMENTS AND COMPLETION
9
Payments to Subcontractors
5.4.2, 9.5.1.3, 9.6.2, 9.6.3, 9.6.4, 9.6.7, 14.2.1.2
PCB
10.3.1
Performance Bond and Payment Bond
7.3.4.4, 9.6.7, 9.10.3, **11.1.2**
Permits, Fees, Notices and Compliance with Laws
2.3.1, **3.7**, 3.13, 7.3.4.4, 10.2.2
PERSONS AND PROPERTY, PROTECTION OF
10
Polychlorinated Biphenyl
10.3.1
Product Data, Definition of
3.12.2
Product Data and Samples, Shop Drawings
3.11, **3.12**, 4.2.7
Progress and Completion
4.2.2, **8.2**, 9.8, 9.9.1, 14.1.4, 15.1.4
Progress Payments
9.3, **9.6**, 9.8.5, 9.10.3, 14.2.3, 15.1.4
Project, Definition of
1.1.4
Project Representatives
4.2.10
Property Insurance
10.2.5, **11.2**
Proposal Requirements
1.1.1
PROTECTION OF PERSONS AND PROPERTY
10
Regulations and Laws
1.5, 2.3.2, 3.2.3, 3.6, 3.7, 3.12.10, 3.13, 9.6.4, 9.9.1, 10.2.2, 13.1, 13.3, 13.4.1, 13.4.2, 13.5, 14, 15.2.8, 15.4
Rejection of Work
4.2.6, 12.2.1
Releases and Waivers of Liens
9.3.1, 9.10.2
Representations
3.2.1, 3.5, 3.12.6, 8.2.1, 9.3.3, 9.4.2, 9.5.1, 9.10.1
Representatives
2.1.1, 3.1.1, 3.9, 4.1.1, 4.2.10, 13.2.1
Responsibility for Those Performing the Work
3.3.2, 3.18, 4.2.2, 4.2.3, 5.3, 6.1.3, 6.2, 6.3, 9.5.1, 10
Retainage
9.3.1, 9.6.2, 9.8.5, 9.9.1, 9.10.2, 9.10.3
Review of Contract Documents and Field Conditions by Contractor
3.2, 3.12.7, 6.1.3
Review of Contractor's Submittals by Owner and Architect
3.10.1, 3.10.2, 3.11, 3.12, 4.2, 5.2, 6.1.3, 9.2, 9.8.2
Review of Shop Drawings, Product Data and Samples by Contractor

AIA Document A201 – 2017. Copyright © 1911, 1915, 1918, 1925, 1937, 1951, 1958, 1961, 1963, 1966, 1970, 1976, 1987, 1997, 2007 and 2017. All rights reserved. "The American Institute of Architects," "American Institute of Architects," "AIA," the AIA Logo, and "AIA Contract Documents" are trademarks of The American Institute of Architects. This document was produced at 15:45:22 CDT on 05/11/2026 under Subscription No.20240042832 which expires on 07/01/2026, is not for resale, is licensed for one-time use only, and may only be used in accordance with the AIA Contract Documents® Terms of Service. To report copyright violations, e-mail docinfo@aiacontracts.com.
User Notes: (69f1008b5f1b2d23ced2487a)

3.12
Rights and Remedies
1.1.2, 2.4, 2.5, 3.5, 3.7.4, 3.15.2, 4.2.6, 5.3, 5.4, 6.1, 6.3, 7.3.1, 8.3, 9.5.1, 9.7, 10.2.5, 10.3, 12.2.1, 12.2.2, 12.2.4, **13.3**, 14, 15.4
Royalties, Patents and Copyrights
3.17
Rules and Notices for Arbitration
15.4.1
Safety of Persons and Property
10.2, 10.4
Safety Precautions and Programs
3.3.1, 4.2.2, 4.2.7, 5.3, **10.1**, 10.2, 10.4
Samples, Definition of
3.12.3
Samples, Shop Drawings, Product Data and
3.11, **3.12**, 4.2.7
Samples at the Site, Documents and
3.11
Schedule of Values
9.2, 9.3.1
Schedules, Construction
3.10, 3.12.1, 3.12.2, 6.1.3, 15.1.6.2
Separate Contracts and Contractors
1.1.4, 3.12.5, 3.14.2, 4.2.4, 4.2.7, 6, 8.3.1, 12.1.2
Separate Contractors, Definition of
6.1.1
Shop Drawings, Definition of
3.12.1
Shop Drawings, Product Data and Samples
3.11, **3.12**, 4.2.7
Site, Use of
3.13, 6.1.1, 6.2.1
Site Inspections
3.2.2, 3.3.3, 3.7.1, 3.7.4, 4.2, 9.9.2, 9.4.2, 9.10.1, 13.4
Site Visits, Architect's
3.7.4, 4.2.2, 4.2.9, 9.4.2, 9.5.1, 9.9.2, 9.10.1, 13.4
Special Inspections and Testing
4.2.6, 12.2.1, 13.4
Specifications, Definition of
1.1.6
Specifications
1.1.1, **1.1.6**, 1.2.2, 1.5, 3.12.10, 3.17, 4.2.14
Statute of Limitations
15.1.2, 15.4.1.1
Stopping the Work
2.2.2, 2.4, 9.7, 10.3, 14.1
Stored Materials
6.2.1, 9.3.2, 10.2.1.2, 10.2.4
Subcontractor, Definition of
5.1.1
SUBCONTRACTORS
5
Subcontractors, Work by
1.2.2, 3.3.2, 3.12.1, 3.18, 4.2.3, 5.2.3, 5.3, 5.4, 9.3.1.2, 9.6.7
Subcontractual Relations
5.3, 5.4, 9.3.1.2, 9.6, 9.10, 10.2.1, 14.1, 14.2.1
Submittals
3.10, 3.11, 3.12, 4.2.7, 5.2.1, 5.2.3, 7.3.4, 9.2, 9.3, 9.8, 9.9.1, 9.10.2, 9.10.3
Submittal Schedule
3.10.2, 3.12.5, 4.2.7
Subrogation, Waivers of
6.1.1, **11.3**
Substances, Hazardous
10.3
Substantial Completion
4.2.9, 8.1.1, 8.1.3, 8.2.3, 9.4.2, **9.8**, 9.9.1, 9.10.3, 12.2, 15.1.2
Substantial Completion, Definition of
9.8.1
Substitution of Subcontractors
5.2.3, 5.2.4
Substitution of Architect
2.3.3
Substitutions of Materials
3.4.2, 3.5, 7.3.8
Sub-subcontractor, Definition of
5.1.2
Subsurface Conditions
3.7.4
Successors and Assigns
13.2
Superintendent
3.9, 10.2.6
Supervision and Construction Procedures
1.2.2, **3.3**, 3.4, 3.12.10, 4.2.2, 4.2.7, 6.1.3, 6.2.4, 7.1.3, 7.3.4, 8.2, 8.3.1, 9.4.2, 10, 12, 14, 15.1.4
Suppliers
1.5, 3.12.1, 4.2.4, 4.2.6, 5.2.1, 9.3, 9.4.2, 9.5.4, 9.6, 9.10.5, 14.2.1
Surety
5.4.1.2, 9.6.8, 9.8.5, 9.10.2, 9.10.3, 11.1.2, 14.2.2, 15.2.7
Surety, Consent of
9.8.5, 9.10.2, 9.10.3
Surveys
1.1.7, 2.3.4
Suspension by the Owner for Convenience
14.3
Suspension of the Work
3.7.5, 5.4.2, 14.3
Suspension or Termination of the Contract
5.4.1.1, 14
Taxes
3.6, 3.8.2.1, 7.3.4.4
Termination by the Contractor
14.1, 15.1.7
Termination by the Owner for Cause
5.4.1.1, **14.2**, 15.1.7
Termination by the Owner for Convenience
14.4
Termination of the Architect
2.3.3
Termination of the Contractor Employment
14.2.2

AIA Document A201 – 2017. Copyright © 1911, 1915, 1918, 1925, 1937, 1951, 1958, 1961, 1963, 1966, 1970, 1976, 1987, 1997, 2007 and 2017. All rights reserved. "The American Institute of Architects," "American Institute of Architects," "AIA," the AIA Logo, and "AIA Contract Documents" are trademarks of The American Institute of Architects. This document was produced at 15:45:22 CDT on 05/11/2026 under Subscription No.20240042832 which expires on 07/01/2026, is not for resale, is licensed for one-time use only, and may only be used in accordance with the AIA Contract Documents® Terms of Service. To report copyright violations, e-mail docinfo@aiacontracts.com.
User Notes: (69f1008b5f1b2d23ced2487a)

TERMINATION OR SUSPENSION OF THE CONTRACT
14
Tests and Inspections
3.1.3, 3.3.3, 3.7.1, 4.2.2, 4.2.6, 4.2.9, 9.4.2, 9.8.3, 9.9.2, 9.10.1, 10.3.2, 12.2.1, **13.4**
TIME
8
Time, Delays and Extensions of
3.2.4, 3.7.4, 5.2.3, 7.2.1, 7.3.1, 7.4, **8.3**, 9.5.1, 9.7, 10.3.2, 10.4, 14.3.2, 15.1.6, 15.2.5
Time Limits
2.1.2, 2.2, 2.5, 3.2.2, 3.10, 3.11, 3.12.5, 3.15.1, 4.2, 5.2, 5.3, 5.4, 6.2.4, 7.3, 7.4, 8.2, 9.2, 9.3.1, 9.3.3, 9.4.1, 9.5, 9.6, 9.7, 9.8, 9.9, 9.10, 12.2, 13.4, 14, 15.1.2, 15.1.3, 15.4
Time Limits on Claims
3.7.4, 10.2.8, 15.1.2, 15.1.3
Title to Work
9.3.2, 9.3.3
UNCOVERING AND CORRECTION OF WORK
12
Uncovering of Work
12.1
Unforeseen Conditions, Concealed or Unknown
3.7.4, 8.3.1, 10.3
Unit Prices
7.3.3.2, 9.1.2
Use of Documents
1.1.1, 1.5, 2.3.6, 3.12.6, 5.3
Use of Site
3.13, 6.1.1, 6.2.1
Values, Schedule of
9.2, 9.3.1
Waiver of Claims by the Architect
13.3.2
Waiver of Claims by the Contractor
9.10.5, 13.3.2, **15.1.7**
Waiver of Claims by the Owner
9.9.3, 9.10.3, 9.10.4, 12.2.2.1, 13.3.2, 14.2.4, **15.1.7**
Waiver of Consequential Damages
14.2.4, 15.1.7
Waiver of Liens
9.3, 9.10.2, 9.10.4
Waivers of Subrogation
6.1.1, **11.3**
Warranty
3.5, 4.2.9, 9.3.3, 9.8.4, 9.9.1, 9.10.2, 9.10.4, 12.2.2, 15.1.2
Weather Delays
8.3, 15.1.6.2
Work, Definition of
1.1.3
Written Consent
1.5.2, 3.4.2, 3.7.4, 3.12.8, 3.14.2, 4.1.2, 9.3.2, 9.10.3, 13.2, 13.3.2, 15.4.4.2
Written Interpretations
4.2.11, 4.2.12
Written Orders
1.1.1, 2.4, 3.9, 7, 8.2.2, 12.1, 12.2, 13.4.2, 14.3.1

AIA Document A201 – 2017. Copyright © 1911, 1915, 1918, 1925, 1937, 1951, 1958, 1961, 1963, 1966, 1970, 1976, 1987, 1997, 2007 and 2017. All rights reserved. "The American Institute of Architects," "American Institute of Architects," "AIA," the AIA Logo, and "AIA Contract Documents" are trademarks of The American Institute of Architects. This document was produced at 15:45:22 CDT on 05/11/2026 under Subscription No.20240042832 which expires on 07/01/2026, is not for resale, is licensed for one-time use only, and may only be used in accordance with the AIA Contract Documents® Terms of Service. To report copyright violations, e-mail docinfo@aiacontracts.com.
User Notes: (69f1008b5f1b2d23ced2487a)

ARTICLE 1 GENERAL PROVISIONS

§ 1.1 Basic Definitions

§ 1.1.1 The Contract Documents

The Contract Documents are enumerated in the Agreement between the Owner and Contractor (hereinafter the Agreement) and consist of the Agreement, Conditions of the Contract (General, Supplementary and other Conditions), Drawings, Specifications, Addenda issued prior to execution of the Contract, other documents listed in the Agreement, and Modifications issued after execution of the Contract. A Modification is (1) a written amendment to the Contract signed by both parties, (2) a Change Order, (3) a Construction Change Directive, or (4) a written order for a minor change in the Work issued by the Design Consultant. Unless specifically enumerated in the Agreement, the Contract Documents do not include the advertisement or invitation to bid, Instructions to Bidders, sample forms, other information furnished by the Owner in anticipation of receiving bids or proposals, the Contractor's bid or proposal, or portions of Addenda relating to bidding or proposal requirements.

§ 1.1.2 The Contract

The Contract Documents form the Contract for Construction. The Contract represents the entire and integrated agreement between the parties hereto and supersedes prior negotiations, representations, or agreements, either written or oral. The Contract may be amended or modified only by a Modification. The Contract Documents shall not be construed to create a contractual relationship of any kind (1) between the Contractor and the Design Consultant or the Design Consultant's consultants, (2) between the Owner and a Subcontractor or a Sub-subcontractor, (3) between the Owner and the Design Consultant or the Design Consultant's consultants, or (4) between any persons or entities other than the Owner and the Contractor. The Design Consultant shall, however, be entitled to performance and enforcement of obligations under the Contract intended to facilitate performance of the Design Consultant's duties.

§ 1.1.3 The Work

The term "Work" means the construction and services required by the Contract Documents, whether completed or partially completed, and includes all other labor, materials, equipment, and services provided or to be provided by the Contractor to fulfill the Contractor's obligations. The Work may constitute the whole or a part of the Project.

§ 1.1.4 The Project

The Project is the total construction of which the Work performed under the Contract Documents may be the whole or a part and which may include construction by the Owner and by Separate Contractors.

§ 1.1.5 The Drawings

The Drawings are the graphic and pictorial portions of the Contract Documents showing the design, location and dimensions of the Work, generally including plans, elevations, sections, details, schedules, and diagrams.

§ 1.1.6 The Specifications

The Specifications are that portion of the Contract Documents consisting of the written requirements for materials, equipment, systems, standards and workmanship for the Work, and performance of related services.

§ 1.1.7 Instruments of Service

Instruments of Service are representations, in any medium of expression now known or later developed, of the tangible and intangible creative work performed by theDesign Consultant and the Design Consultant's consultants under their respective professional services agreements. Instruments of Service may include, without limitation, studies, surveys, models, sketches, drawings, specifications, and other similar materials.

§ 1.1.8 Initial Decision Maker

The Initial Decision Maker is the person identified in the Agreement to render initial decisions on Claims in accordance with Section 15.2. The Initial Decision Maker shall not show partiality to the Owner or Contractor and shall not be liable for results of interpretations or decisions rendered in good faith.

§ 1.2 Correlation and Intent of the Contract Documents

§ 1.2.1 The intent of the Contract Documents is to include all items necessary for the proper execution and completion of the Work by the Contractor. The Contract Documents are complementary, and what is required by one shall be as binding as if required by all; performance by the Contractor shall be required only to the extent consistent with the Contract Documents and reasonably inferable from them as being necessary to produce the indicated results.

AIA Document A201 – 2017. Copyright © 1911, 1915, 1918, 1925, 1937, 1951, 1958, 1961, 1963, 1966, 1970, 1976, 1987, 1997, 2007 and 2017. All rights reserved. "The American Institute of Architects," "American Institute of Architects," "AIA," the AIA Logo, and "AIA Contract Documents" are trademarks of The American Institute of Architects. This document was produced at 15:45:22 CDT on 05/11/2026 under Subscription No.20240042832 which expires on 07/01/2026, is not for resale, is licensed for one-time use only, and may only be used in accordance with the AIA Contract Documents® Terms of Service. To report copyright violations, e-mail docinfo@aiacontracts.com.
User Notes: (69f1008b5f1b2d23ced2487a)

§ 1.2.1.1 The invalidity of any provision of the Contract Documents shall not invalidate the Contract or its remaining provisions. If it is determined that any provision of the Contract Documents violates any law, or is otherwise invalid or unenforceable, then that provision shall be revised to the extent necessary to make that provision legal and enforceable. In such case the Contract Documents shall be construed, to the fullest extent permitted by law, to give effect to the parties' intentions and purposes in executing the Contract.

§ 1.2.2 Organization of the Specifications into divisions, sections and articles, and arrangement of Drawings shall not control the Contractor in dividing the Work among Subcontractors or in establishing the extent of Work to be performed by any trade.

§ 1.2.3 Unless otherwise stated in the Contract Documents, words that have well-known technical or construction industry meanings are used in the Contract Documents in accordance with such recognized meanings.

§ 1.3 Capitalization

Terms capitalized in these General Conditions include those that are (1) specifically defined, (2) the titles of numbered articles, or (3) the titles of other documents published by the American Institute of Architects.

§ 1.4 Interpretation

In the interest of brevity the Contract Documents frequently omit modifying words such as "all" and "any" and articles such as "the" and "an," but the fact that a modifier or an article is absent from one statement and appears in another is not intended to affect the interpretation of either statement.

§ 1.5 Ownership and Use of Drawings, Specifications, and Other Instruments of Service

§ 1.5.1 The Design Consultant and the Design Consultant's consultants shall be deemed the authors and owners of their respective Instruments of Service, including the Drawings and Specifications, and retain all common law, statutory, and other reserved rights in their Instruments of Service, including copyrights. The Contractor, Subcontractors, Sub-subcontractors, and suppliers shall not own or claim a copyright in the Instruments of Service. Submittal or distribution to meet official regulatory requirements or for other purposes in connection with the Project is not to be construed as publication in derogation of the Design Consultant's or Design Consultant's consultants' reserved rights.

§ 1.5.2 The Contractor, Subcontractors, Sub-subcontractors, and suppliers are authorized to use and reproduce the Instruments of Service provided to them, subject to any protocols established pursuant to Sections 1.7 and 1.8, solely and exclusively for execution of the Work. All copies made under this authorization shall bear the copyright notice, if any, shown on the Instruments of Service. The Contractor, Subcontractors, Sub-subcontractors, and suppliers may not use the Instruments of Service on other projects or for additions to the Project outside the scope of the Work without the specific written consent of the Owner, Design Consultant, and the Design Consultant's consultants.

§ 1.6 Notice

§ 1.6.1 Except as otherwise provided in Section 1.6.2, where the Contract Documents require one party to notify or give notice to the other party, such notice shall be provided in writing to the designated representative of the party to whom the notice is addressed and shall be deemed to have been duly served if delivered in person, by mail, by courier, or by electronic transmission if a method for electronic transmission is set forth in the Agreement.

§ 1.6.2 Notice of Claims as provided in Section 15.1.3 shall be provided in writing and shall be deemed to have been duly served only if delivered to the designated representative of the party to whom the notice is addressed by certified or registered mail, or by courier providing proof of delivery.

§ 1.7 Digital Data Use and Transmission

The parties shall agree upon written protocols governing the transmission and use of, and reliance on, Instruments of Service or any other information or documentation in digital form.

AIA Document A201 – 2017. Copyright © 1911, 1915, 1918, 1925, 1937, 1951, 1958, 1961, 1963, 1966, 1970, 1976, 1987, 1997, 2007 and 2017. All rights reserved. "The American Institute of Architects," "American Institute of Architects," "AIA," the AIA Logo, and "AIA Contract Documents" are trademarks of The American Institute of Architects. This document was produced at 15:45:22 CDT on 05/11/2026 under Subscription No.20240042832 which expires on 07/01/2026, is not for resale, is licensed for one-time use only, and may only be used in accordance with the AIA Contract Documents® Terms of Service. To report copyright violations, e-mail docinfo@aiacontracts.com.
User Notes: (69f1008b5f1b2d23ced2487a)

ARTICLE 2 OWNER

§ 2.1 General

§ 2.1.1 The Owner is the person or entity identified as such in the Agreement and is referred to throughout the Contract Documents as if singular in number. The Owner shall designate in writing a representative who shall have express authority to bind the Owner with respect to all matters requiring the Owner's approval or authorization. Except as otherwise provided in Section 4.2.1, the Design Consultant does not have such authority. The term "Owner" means the Owner or the Owner's authorized representative.

§ 2.1.2 Alabama law prohibits the enforcement of liens against public property. Contractor shall furnish payment and performance bonds. The Owner shall furnish to the Contractor, within fifteen days after receipt of a written request, information necessary and relevant for the Contractor to evaluate, give notice of, or enforce mechanic's lien rights. Such information shall include a correct statement of the record legal title to the property on which the Project is located, usually referred to as the site, and the Owner's interest therein.

§ 2.2 Evidence of the Owner's Financial Arrangements

§ 2.2.1 Prior to commencement of the Work and upon written request by the Contractor, the Owner shall furnish to the Contractor reasonable evidence that the Owner has made financial arrangements to fulfill the Owner's obligations under the Contract. The Contractor shall have no obligation to commence the Work until the Owner provides such evidence. If commencement of the Work is delayed under this Section 2.2.1, the Contract Time shall be extended appropriately.

§ 2.2.2 Following commencement of the Work and upon written request by the Contractor, the Owner shall furnish to the Contractor reasonable evidence that the Owner has made financial arrangements to fulfill the Owner's obligations under the Contract only if (1) the Owner fails to make payments to the Contractor as the Contract Documents require; (2) the Contractor identifies in writing a reasonable concern regarding the Owner's ability to make payment when due; or (3) a change in the Work materially changes the Contract Sum. If the Owner fails to provide such evidence, as required, within fourteen days of the Contractor's request, the Contractor may immediately stop the Work and, in that event, shall notify the Owner that the Work has stopped. However, if the request is made because a change in the Work materially changes the Contract Sum under (3) above, the Contractor may immediately stop only that portion of the Work affected by the change until reasonable evidence is provided. If the Work is stopped under this Section 2.2.2, the Contract Time shall be extended appropriately and the Contract Sum shall be increased by the amount of the Contractor's reasonable costs of shutdown, delay and start-up, plus interest as provided in the Contract Documents.

§ 2.2.3 After the Owner furnishes evidence of financial arrangements under this Section 2.2, the Owner shall not materially vary such financial arrangements without prior notice to the Contractor.

§ 2.2.4 Where the Owner has designated information furnished under this Section 2.2 as "confidential," the Contractor shall keep the information confidential and shall not disclose it to any other person. However, the Contractor may disclose "confidential" information, after seven (7) days' notice to the Owner, where disclosure is required by law, including a subpoena or other form of compulsory legal process issued by a court or governmental entity, or by court or arbitrator(s) order. The Contractor may also disclose "confidential" information to its employees, consultants, sureties, Subcontractors and their employees, Sub-subcontractors, and others who need to know the content of such information solely and exclusively for the Project and who agree to maintain the confidentiality of such information.

§ 2.3 Information and Services Required of the Owner

§ 2.3.1 Except for permits and fees that are the responsibility of the Contractor under the Contract Documents, including those required under Section 3.7.1, the Owner shall secure and pay for necessary approvals, easements, assessments and charges required for construction, use or occupancy of permanent structures or for permanent changes in existing facilities.

§ 2.3.2 The Owner shall retain a Design Consultant for this project, that person is referred to as the Design Consultant in this document, and shall preform duties of design and supervision of construction and other duties as described herein, if a provision is left to an Architect it is the Owner's intention that said Design Conuslant shall be repsonsible.

AIA Document A201 – 2017. Copyright © 1911, 1915, 1918, 1925, 1937, 1951, 1958, 1961, 1963, 1966, 1970, 1976, 1987, 1997, 2007 and 2017. All rights reserved. "The American Institute of Architects," "American Institute of Architects," "AIA," the AIA Logo, and "AIA Contract Documents" are trademarks of The American Institute of Architects. This document was produced at 15:45:22 CDT on 05/11/2026 under Subscription No.20240042832 which expires on 07/01/2026, is not for resale, is licensed for one-time use only, and may only be used in accordance with the AIA Contract Documents® Terms of Service. To report copyright violations, e-mail docinfo@aiacontracts.com.
User Notes: (69f1008b5f1b2d23ced2487a)

§ 2.3.3 If the employment of the Design Consultant terminates, the Owner shall employ a successor to whom the Contractor has no reasonable objection and whose status under the Contract Documents shall be that of the Design Consultant.

§ 2.3.4 The Owner shall furnish surveys describing physical characteristics, legal limitations and utility locations for the site of the Project, and a legal description of the site. The Contractor shall be entitled to rely on the accuracy of information furnished by the Owner but shall exercise proper precautions relating to the safe performance of the Work.

§ 2.3.5 The Owner shall furnish information or services required of the Owner by the Contract Documents with reasonable promptness. The Owner shall also furnish any other information or services under the Owner's control and relevant to the Contractor's performance of the Work with reasonable promptness after receiving the Contractor's written request for such information or services.

§ 2.3.6 Unless otherwise provided in the Contract Documents, the Owner shall furnish to the Contractor one copy of the Contract Documents for purposes of making reproductions pursuant to Section 1.5.2.

§ 2.4 Owner's Right to Stop the Work

If the Contractor fails to correct Work that is not in accordance with the requirements of the Contract Documents as required by Section 12.2 or repeatedly fails to carry out Work in accordance with the Contract Documents, the Owner may issue a written order to the Contractor to stop the Work, or any portion thereof, until the cause for such order has been eliminated; however, the right of the Owner to stop the Work shall not give rise to a duty on the part of the Owner to exercise this right for the benefit of the Contractor or any other person or entity, except to the extent required by Section 6.1.3.

§ 2.5 Owner's Right to Carry Out the Work

If the Contractor defaults or neglects to carry out the Work in accordance with the Contract Documents and fails within a ten-day period after receipt of notice from the Owner to commence and continue correction of such default or neglect with diligence and promptness, the Owner may, without prejudice to other remedies the Owner may have, correct such default or neglect. Such action by the Owner and amounts charged to the Contractor are both subject to prior approval of the Design Consultant and the Design Consultant may, pursuant to Section 9.5.1, withhold or nullify a Certificate for Payment in whole or in part, to the extent reasonably necessary to reimburse the Owner for the reasonable cost of correcting such deficiencies, including Owner's expenses and compensation for the Design Consultant's additional services made necessary by such default, neglect, or failure. If current and future payments are not sufficient to cover such amounts, the Contractor shall pay the difference to the Owner. If the Contractor disagrees with the actions of the Owner or the Design Consultant, or the amounts claimed as costs to the Owner, the Contractor may file a Claim pursuant to Article 15.

ARTICLE 3 CONTRACTOR

§ 3.1 General

§ 3.1.1 The Contractor is the person or entity identified as such in the Agreement and is referred to throughout the Contract Documents as if singular in number. The Contractor shall be lawfully licensed, if required in the jurisdiction where the Project is located. The Contractor shall designate in writing a representative who shall have express authority to bind the Contractor with respect to all matters under this Contract. The term "Contractor" means the Contractor or the Contractor's authorized representative.

§ 3.1.2 The Contractor shall perform the Work in accordance with the Contract Documents.

§ 3.1.3 The Contractor shall not be relieved of its obligations to perform the Work in accordance with the Contract Documents either by activities or duties of the Design Consultant in the Design Consultant's administration of the Contract, or by tests, inspections or approvals required or performed by persons or entities other than the Contractor.

§ 3.2 Review of Contract Documents and Field Conditions by Contractor

§ 3.2.1 Execution of the Contract by the Contractor is a representation that the Contractor has visited the site, become generally familiar with local conditions under which the Work is to be performed, and correlated personal observations with requirements of the Contract Documents.

AIA Document A201 – 2017. Copyright © 1911, 1915, 1918, 1925, 1937, 1951, 1958, 1961, 1963, 1966, 1970, 1976, 1987, 1997, 2007 and 2017. All rights reserved. "The American Institute of Architects," "American Institute of Architects," "AIA," the AIA Logo, and "AIA Contract Documents" are trademarks of The American Institute of Architects. This document was produced at 15:45:22 CDT on 05/11/2026 under Subscription No.20240042832 which expires on 07/01/2026, is not for resale, is licensed for one-time use only, and may only be used in accordance with the AIA Contract Documents® Terms of Service. To report copyright violations, e-mail docinfo@aiacontracts.com.
User Notes: (69f1008b5f1b2d23ced2487a)

§ 3.2.2 Because the Contract Documents are complementary, the Contractor shall, before starting each portion of the Work, carefully study and compare the various Contract Documents relative to that portion of the Work, as well as the information furnished by the Owner pursuant to Section 2.3.4, shall take field measurements of any existing conditions related to that portion of the Work, and shall observe any conditions at the site affecting it. These obligations are for the purpose of facilitating coordination and construction by the Contractor and are not for the purpose of discovering errors, omissions, or inconsistencies in the Contract Documents; however, the Contractor shall promptly report to the Design Consultant & Owner any errors, inconsistencies or omissions discovered by or made known to the Contractor as a request for information in such form as the Design Consultant may require. It is recognized that the Contractor's review is made in the Contractor's capacity as a contractor and not as a licensed design professional, unless otherwise specifically provided in the Contract Documents.

§ 3.2.3 The Contractor is not required to ascertain that the Contract Documents are in accordance with applicable laws, statutes, ordinances, codes, rules and regulations, or lawful orders of public authorities, but the Contractor shall promptly report to the Design Consultant & Owner any nonconformity discovered by or made known to the Contractor as a request for information in such form as the Design Consultant or Owner may require.

§ 3.2.4 If the Contractor believes that additional cost or time is involved because of clarifications or instructions the Design Consultant issues in response to the Contractor's notices or requests for information pursuant to Sections 3.2.2 or 3.2.3, the Contractor shall submit Claims as provided in Article 15. If the Contractor fails to perform the obligations of Sections 3.2.2 or 3.2.3, the Contractor shall pay such costs and damages to the Owner, subject to Section 15.1.7, as would have been avoided if the Contractor had performed such obligations. If the Contractor performs those obligations, the Contractor shall not be liable to the Owner or Design Consultant for damages resulting from errors, inconsistencies or omissions in the Contract Documents, for differences between field measurements or conditions and the Contract Documents, or for nonconformities of the Contract Documents to applicable laws, statutes, ordinances, codes, rules and regulations, and lawful orders of public authorities.

§ 3.3 Supervision and Construction Procedures

§ 3.3.1 The Contractor shall supervise and direct the Work, using the Contractor's best skill and attention. The Contractor shall be solely responsible for, and have control over, construction means, methods, techniques, sequences, and procedures, and for coordinating all portions of the Work under the Contract. If the Contract Documents give specific instructions concerning construction means, methods, techniques, sequences, or procedures, the Contractor shall evaluate the jobsite safety thereof and shall be solely responsible for the jobsite safety of such means, methods, techniques, sequences, or procedures. If the Contractor determines that such means, methods, techniques, sequences or procedures may not be safe, the Contractor shall give timely notice to the Owner and Design Consultant, and shall propose alternative means, methods, techniques, sequences, or procedures. The Design Consultant and/or Owner shall evaluate the proposed alternative solely for conformance with the design intent for the completed construction. Unless the Design Consultant objects to the Contractor's proposed alternative, the Contractor shall perform the Work using its alternative means, methods, techniques, sequences, or procedures.

§ 3.3.2 The Contractor shall be responsible to the Owner for acts and omissions of the Contractor's employees, Subcontractors and their agents and employees, and other persons or entities performing portions of the Work for, or on behalf of, the Contractor or any of its Subcontractors.

§ 3.3.3 The Contractor shall be responsible for inspection of portions of Work already performed to determine that such portions are in proper condition to receive subsequent Work.

§3.3.4 Three days after the opening of sealed Bid, the Contractor shall furnish, an outline of the education, experience and character of the Contractor's project manager, superintendent, and engineer. Any future substitution must have prior written approval of the Owner.

§ 3.4 Labor and Materials

§ 3.4.1 Unless otherwise provided in the Contract Documents, the Contractor shall provide and pay for labor, materials, equipment, tools, construction equipment and machinery, water, heat, utilities, transportation, and other facilities and services necessary for proper execution and completion of the Work, whether temporary or permanent and whether or not incorporated or to be incorporated in the Work.

§ 3.4.1.1 As applicable, the Contractor shall be responsible at the appropriate time during construction of the Project to have all permanent meters installed (electrical, water, gas, etc.) and all utilities connected prior to the time of Final Inspection. The Contractor shall pay all utility costs until the Project is accepted by the City of Mobile.

AIA Document A201 – 2017. Copyright © 1911, 1915, 1918, 1925, 1937, 1951, 1958, 1961, 1963, 1966, 1970, 1976, 1987, 1997, 2007 and 2017. All rights reserved. "The American Institute of Architects," "American Institute of Architects," "AIA," the AIA Logo, and "AIA Contract Documents" are trademarks of The American Institute of Architects. This document was produced at 15:45:22 CDT on 05/11/2026 under Subscription No.20240042832 which expires on 07/01/2026, is not for resale, is licensed for one-time use only, and may only be used in accordance with the AIA Contract Documents® Terms of Service. To report copyright violations, e-mail docinfo@aiacontracts.com.
User Notes: (69f1008b5f1b2d23ced2487a)

§ 3.4.2 Except in the case of minor changes in the Work approved by the Design Consultant in accordance with Section 3.12.8 or ordered by the Design Consultant in accordance with Section 7.4, the Contractor may make substitutions only with the consent of the Owner, after evaluation by the Design Consultant and in accordance with a Change Order or Construction Change Directive. Construction Change Directive's should be used only in emergencies and in compliance with Alabama Code Title 39 or 41 as applicable.
§ 3.4.3 The Contractor shall enforce strict discipline and good order among the Contractor's employees and other persons carrying out the Work. The Contractor shall not permit employment of unfit persons or persons not properly skilled in tasks assigned to them.

§ 3.4.4 The Contractor is responsible for the skill of Work. All workers engaged on special work or skilled Work in any supervisory position or trade shall be qualified and have had sufficient education, training,and experience as a recognized professional or master mechanic in such Work to perform it properly and satisfactorily as prescribed in the Contract.

§ 3.4.5 Any project manager, superintendent, engineer, foreman, or workman employed by the Contractor or by a Subcontractor who, in the opinion of the Design Consultant and/or Owner, does not perform his/her Work in a proper and skillful manner or becomes party to disrespectful, intemperate, disorderly, intoxicated, or dishonest behavior, or uses foul language, fights, commits criminal act(s), falsifies records and construction, covers-up faulty Work or materials, does not comprehend or follow instructions, does not get along with the Design Consultant or Owner's representative, or is otherwise objectionable, shall at the written request by the Design Consultant, be discharged within 24 hours by the Contractor or Subcontractor employing such project manager, superintendent, engineer, foreman or workman, and shall not be employed again or any portion of the Work without the written consent of the Design Consultant and/or Owner.
§ 3.4.6 Should the Contractor fail to remove such person or persons specified in Article 3.4.5 hereinabove or fail to furnish suitable and sufficient machinery, equipment, materials or qualified labor force for the proper execution of the Work, the Design Consultant may withhold all payments which are or may become due to the Contractor or may suspend the Work until such orders are complied with.

§ 3.4.6 During the performance of Work, Contractor shall follow City of Mobile Code § 14-9 Nondiscrimination Provisions:

1. The contractor will not discriminate against any employee or applicant for employment because of race, creed, color, national origin or disability. The contractor will take affirmative action to ensure that applicants are employed, and that employees are treated during employment, without regard to their race, creed, color, national origin or disability. Such action shall include but not be limited to the following: Employment, upgrading, demotion or transfer; recruitment or recruitment advertising; layoff or termination; rates of pay or other forms of compensation; and selection for training, including apprenticeship. The contractor agrees to post in conspicuous places, available to employees and applicants for employment, notices to be provided by the contracting agency of the municipality setting forth the provisions of this nondiscrimination clause.
2. The contractor will, in all solicitations or advertisements for employees placed by or on behalf of the contractor, state that all qualifying applicants will receive consideration for employment without regard to race, creed, color, national origin or disability.
3. The contractor will send to each labor union or representative of workers with which he has a collective bargaining agreement or other contract or understanding, a notice to be provided by the municipal contracting agency, advising the labor union or worker's representative of the contractor's commitments under this section, and shall post copies of such notice in conspicuous places available to employees and applicants for employment.
4. In the event of the contractor's noncompliance with the nondiscrimination clauses of this contract, this contract may be canceled, terminated or suspended in whole or in part and the contractor may be declared ineligible for further municipal contracts.
5. The contractor will include the provisions of this section in every subcontract or purchase order unless exempted by written orders of the governing body of the City of Mobile so that such provisions will be binding upon each subcontractor or vendor.
6. Each contractor will agree to the above in writing, including the contractor's commitment

AIA Document A201 – 2017. Copyright © 1911, 1915, 1918, 1925, 1937, 1951, 1958, 1961, 1963, 1966, 1970, 1976, 1987, 1997, 2007 and 2017. All rights reserved. "The American Institute of Architects," "American Institute of Architects," "AIA," the AIA Logo, and "AIA Contract Documents" are trademarks of The American Institute of Architects. This document was produced at 15:45:22 CDT on 05/11/2026 under Subscription No.20240042832 which expires on 07/01/2026, is not for resale, is licensed for one-time use only, and may only be used in accordance with the AIA Contract Documents® Terms of Service. To report copyright violations, e-mail docinfo@aiacontracts.com.
User Notes: (69f1008b5f1b2d23ced2487a)

to follow the Americans with Disabilities Act of 1990.

§ 3.4.6 During the performance of Work, Contractor shall follow City of Mobile Code § 14-10 to encourage participation of socially and economically disadvantaged contractors by utilizing the Subcontracting and Major Supplier Plan included in the Bid Package.

§ 3.5 Warranty

§ 3.5 Warranty

§ 3.5.1 The Contractor warrants to the Owner and Design Consultant that materials and equipment furnished under the Contract will be of good quality and new unless the Contract Documents require or permit otherwise. The Contractor further warrants that the Work will conform to the requirements of the Contract Documents and will be free from defects, except for those inherent in the quality of the Work the Contract Documents require or permit. Work, materials, or equipment not conforming to these requirements may be considered defective. The Contractor's warranty excludes remedy for damage or defect caused by abuse, alterations to the Work not executed by the Contractor, improper or insufficient maintenance, improper operation, or normal wear and tear and normal usage. If required by the Design Consultant, the Contractor shall furnish satisfactory evidence as to the kind and quality of materials and equipment.

§ 3.5.2 All material, equipment, or other special warranties required by the Contract Documents shall be issued in the name of the Owner, or shall be transferable to the Owner, and shall commence in accordance with Section 9.8.4.

§ 3.6 Taxes

The Contractor shall pay sales, consumer, use and similar taxes for the Work provided by the Contractor that are legally enacted when bids are received or negotiations concluded, whether or not yet effective or merely scheduled to go into effect. Most Owner projects are exempt from Sales Tax and should be accounted for in bid package. A completed Form C-3A: Accounting of Sales Tax must be submitted with all Bid Forms. Submission of Sales Tax Form C-3A with the Proposal Form is required

§ 3.7 Permits, Fees, Notices and Compliance with Laws

§ 3.7.1 Unless otherwise provided in the Contract Documents, the Contractor shall secure City of Mobile building permit without cost, and shall secure and pay for any other permits, fees, licenses, and inspections by government agencies necessary for proper execution and completion of the Work that are customarily secured after execution of the Contract and legally required at the time bids are received or negotiations concluded.

§ 3.7.1.1 The Contractor shall secure building and other permits customarily obtained from the City of Mobile at no cost.

§ 3.7.2 The Contractor shall comply with and give notices required by applicable laws, statutes, ordinances, codes, rules and regulations, and lawful orders of public authorities applicable to performance of the Work.

§ 3.7.3 If the Contractor performs Work knowing it to be contrary to applicable laws, statutes, ordinances, codes, rules and regulations, or lawful orders of public authorities, the Contractor shall assume appropriate responsibility for such Work and shall bear the costs attributable to correction.

§ 3.7.4 Concealed or Unknown Conditions

If the Contractor encounters conditions at the site that are (1) subsurface or otherwise concealed physical conditions that differ materially from those indicated in the Contract Documents or (2) unknown physical conditions of an unusual nature that differ materially from those ordinarily found to exist and generally recognized as inherent in construction activities of the character provided for in the Contract Documents, the Contractor shall promptly provide notice to the Owner and the Design Consultant before conditions are disturbed and in no event later than 14 days after first observance of the conditions. The Design Consultant will promptly investigate such conditions and, if the Design Consultant determines that they differ materially and cause an increase or decrease in the Contractor's cost of, or time required for, performance of any part of the Work, will recommend that an equitable adjustment be made in the Contract Sum or Contract Time, or both. If the Design Consultant determines that the conditions at the site are not materially different from those indicated in the Contract Documents and that no change in the terms of the Contract is justified, the Design Consultant shall promptly notify the Owner and Contractor, stating the reasons. If either party disputes the Design Consultant's determination or recommendation, that party may submit a Claim as provided in Article 15.

AIA Document A201 – 2017. Copyright © 1911, 1915, 1918, 1925, 1937, 1951, 1958, 1961, 1963, 1966, 1970, 1976, 1987, 1997, 2007 and 2017. All rights reserved. "The American Institute of Architects," "American Institute of Architects," "AIA," the AIA Logo, and "AIA Contract Documents" are trademarks of The American Institute of Architects. This document was produced at 15:45:22 CDT on 05/11/2026 under Subscription No.20240042832 which expires on 07/01/2026, is not for resale, is licensed for one-time use only, and may only be used in accordance with the AIA Contract Documents® Terms of Service. To report copyright violations, e-mail docinfo@aiacontracts.com.
User Notes: (69f1008b5f1b2d23ced2487a)

§ 3.7.5 If, in the course of the Work, the Contractor encounters human remains or recognizes the existence of burial markers, archaeological sites or wetlands not indicated in the Contract Documents, the Contractor shall immediately suspend any operations that would affect them and shall notify the Owner and Design Consultant. Upon receipt of such notice, the Owner shall promptly take any action necessary to obtain governmental authorization required to resume the operations. The Contractor shall continue to suspend such operations until otherwise instructed by the Owner but shall continue with all other operations that do not affect those remains or features. Requests for adjustments in the Contract Sum and Contract Time arising from the existence of such remains or features may be made as provided in Article 15.

§ 3.8 Allowances

§ 3.8.1 The Contractor shall include in the Contract Sum all allowances stated in the Contract Documents. Items covered by allowances shall be supplied for such amounts and by such persons or entities as the Owner may direct, but the Contractor shall not be required to employ persons or entities to whom the Contractor has reasonable objection.

§ 3.8.2 Unless otherwise provided in the Contract Documents,

.1 allowances shall cover the cost to the Contractor of materials and equipment delivered at the site and all required taxes, less applicable trade discounts;

.2 Contractor's costs for unloading and handling at the site, labor, installation costs, overhead, profit, and other expenses contemplated for stated allowance amounts shall be included in the Contract Sum but not in the allowances; and

.3 whenever costs are more than or less than allowances, the Contract Sum shall be adjusted accordingly by Change Order. The amount of the Change Order shall reflect (1) the difference between actual costs and the allowances under Section 3.8.2.1 and (2) changes in Contractor's costs under Section 3.8.2.2.

§ 3.8.3 Materials and equipment under an allowance shall be selected by the Owner with reasonable promptness.

§ 3.9 Superintendent

§ 3.9.1 The Contractor shall employ a competent superintendent and necessary assistants who shall be in attendance at the Project site during performance of the Work. The superintendent shall represent the Contractor, and communications given to the superintendent shall be as binding as if given to the Contractor.

§ 3.9.2 The Contractor, as soon as practicable after award of the Contract, shall notify the Owner and Design Consultant of the name and qualifications of a proposed superintendent. Within 14 days of receipt of the information, the Design Consultant may notify the Contractor, stating whether the Owner or the Design Consultant (1) has reasonable objection to the proposed superintendent or (2) requires additional time for review. Failure of the Design Consultant to provide notice within the 14-day period shall constitute notice of no reasonable objection.

§ 3.9.3 The Contractor shall not employ a proposed superintendent to whom the Owner or Design Consultant has made reasonable and timely objection. The Contractor shall not change the superintendent without the Owner's consent, which shall not unreasonably be withheld or delayed.

§ 3.10 Contractor's Construction and Submittal Schedules

§ 3.10.1 The Contractor, within seven days after being awarded the Contract, shall submit for the Owner's and Design Consultant's information a Contractor's construction schedule for the Work. The schedule shall contain detail appropriate for the Project, including (1) the date of commencement of the Work, interim schedule milestone dates, and the date of Substantial Completion; (2) an apportionment of the Work by construction activity; and (3) the time required for completion of each portion of the Work. The schedule shall provide for the orderly progression of the Work to completion and shall not exceed time limits current under the Contract Documents. The schedule shall be revised at appropriate intervals as required by the conditions of the Work and Project.

§ 3.10.2 The Contractor, within seven days after being awarded the Contract and thereafter as necessary to maintain a current submittal schedule, shall submit a submittal schedule for the Design Consultant's approval. The Design Consultant's approval shall not be unreasonably delayed or withheld. The submittal schedule shall (1) be coordinated with the Contractor's construction schedule, and (2) allow the Design Consultant reasonable time to

AIA Document A201 – 2017. Copyright © 1911, 1915, 1918, 1925, 1937, 1951, 1958, 1961, 1963, 1966, 1970, 1976, 1987, 1997, 2007 and 2017. All rights reserved. "The American Institute of Architects," "American Institute of Architects," "AIA," the AIA Logo, and "AIA Contract Documents" are trademarks of The American Institute of Architects. This document was produced at 15:45:22 CDT on 05/11/2026 under Subscription No.20240042832 which expires on 07/01/2026, is not for resale, is licensed for one-time use only, and may only be used in accordance with the AIA Contract Documents® Terms of Service. To report copyright violations, e-mail docinfo@aiacontracts.com.
User Notes: (69f1008b5f1b2d23ced2487a)

review submittals. If the Contractor fails to submit a submittal schedule, or fails to provide submittals in accordance with the approved submittal schedule, the Contractor shall not be entitled to any increase in Contract Sum or extension of Contract Time based on the time required for review of submittals.

§ 3.10.3 The Contractor shall perform the Work in general accordance with the most recent schedules submitted to the Owner and Design Consultant.

§ 3.11 Documents and Samples at the Site

The Contractor shall make available, at the Project site, the Contract Documents, including Change Orders, Construction Change Directives, and other Modifications, in good order and marked currently to indicate field changes and selections made during construction, and the approved Shop Drawings, Product Data, Samples, and similar required submittals. These shall be in electronic form or paper copy, available to the Design Consultant and Owner, and delivered to the Design Consultant for submittal to the Owner upon completion of the Work as a record of the Work as constructed.

§ 3.12 Shop Drawings, Product Data and Samples

§ 3.12.1 Shop Drawings are drawings, diagrams, schedules, and other data specially prepared for the Work by the Contractor or a Subcontractor, Sub-subcontractor, manufacturer, supplier, or distributor to illustrate some portion of the Work.

§ 3.12.2 Product Data are illustrations, standard schedules, performance charts, instructions, brochures, diagrams, and other information furnished by the Contractor to illustrate materials or equipment for some portion of the Work.

§ 3.12.3 Samples are physical examples that illustrate materials, equipment, or workmanship, and establish standards by which the Work will be judged.

§ 3.12.4 Shop Drawings, Product Data, Samples, and similar submittals are not Contract Documents. Their purpose is to demonstrate how the Contractor proposes to conform to the information given and the design concept expressed in the Contract Documents for those portions of the Work for which the Contract Documents require submittals. Review by the Design Consultant is subject to the limitations of Section 4.2.7. Informational submittals upon which the Design Consultant is not expected to take responsive action may be so identified in the Contract Documents. Submittals that are not required by the Contract Documents may be returned by the Design Consultant without action.

§ 3.12.5 The Contractor shall review for compliance with the Contract Documents, approve, and submit to the Design Consultant, Shop Drawings, Product Data, Samples, and similar submittals required by the Contract Documents, in accordance with the submittal schedule approved by the Design Consultant or, in the absence of an approved submittal schedule, with reasonable promptness and in such sequence as to cause no delay in the Work or in the activities of the Owner or of Separate Contractors. Submittals which are not marked as reviewed for compliance with the Contract Documents and approved by the Contractor may be returned by the Design Consultant without action. Wherever Shop Drawings are required in these Specifications, Shop Drawings shall be submitted for approval before materials are fabricated. Drawings shall show complete details. Th Contractor shall check and approve them either in writing or by stamp before forwarding to the Design Consultant. The Design Consultant will mark copies "Approved" if correct; or, "Approved As Noted" if only minor corrections are necessary. If major corrections are necessary, they will be noted on the Shop Drawings and they will be returned to the Contractor for correction and resubmission. Submit four (4) copies for Design Consultant's and Owner's use plus the number of copies the Contractor requires for his/her own use.

§ 3.12.6 By submitting Shop Drawings, Product Data, Samples, and similar submittals, the Contractor represents to the Owner and Design Consultant that the Contractor has (1) reviewed and approved them, (2) determined and verified materials, field measurements and field construction criteria related thereto, or will do so, and (3) checked and coordinated the information contained within such submittals with the requirements of the Work and of the Contract Documents.

§ 3.12.6 By submitting Shop Drawings, Product Data, Samples, and similar submittals, the Contractor represents to the Owner and Design Consultant that the Contractor has (1) reviewed and approved them, (2) determined and verified materials, field measurements and field construction criteria related thereto, or will do so, and (3) checked and coordinated the information contained within such submittals with the requirements of the Work and of the Contract Documents.

AIA Document A201 – 2017. Copyright © 1911, 1915, 1918, 1925, 1937, 1951, 1958, 1961, 1963, 1966, 1970, 1976, 1987, 1997, 2007 and 2017. All rights reserved. "The American Institute of Architects," "American Institute of Architects," "AIA," the AIA Logo, and "AIA Contract Documents" are trademarks of The American Institute of Architects. This document was produced at 15:45:22 CDT on 05/11/2026 under Subscription No.20240042832 which expires on 07/01/2026, is not for resale, is licensed for one-time use only, and may only be used in accordance with the AIA Contract Documents® Terms of Service. To report copyright violations, e-mail docinfo@aiacontracts.com.
User Notes: (69f1008b5f1b2d23ced2487a)

§ 3.12.7 The Contractor shall perform no portion of the Work for which the Contract Documents require submittal and review of Shop Drawings, Product Data, Samples, or similar submittals, until the respective submittal has been approved by the Design Consultant.

§ 3.12.8 The Work shall be in accordance with approved submittals except that the Contractor shall not be relieved of responsibility for deviations from the requirements of the Contract Documents by the Design Consultant's approval of Shop Drawings, Product Data, Samples, or similar submittals, unless the Contractor has specifically notified the Design Consultant of such deviation at the time of submittal and (1) the Design Consultant has given written approval to the specific deviation as a minor change in the Work, or (2) a Change Order or Construction Change Directive has been issued authorizing the deviation. The Contractor shall not be relieved of responsibility for errors or omissions in Shop Drawings, Product Data, Samples, or similar submittals, by the Design Consultant's approval thereof.

§ 3.12.9 The Contractor shall direct specific attention, in writing or on resubmitted Shop Drawings, Product Data, Samples, or similar submittals, to revisions other than those requested by the Design Consultant on previous submittals. In the absence of such notice, the Design Consultant's approval of a resubmission shall not apply to such revisions.

§ 3.12.10 The Contractor shall not be required to provide professional services that constitute the practice of architecture or engineering unless such services are specifically required by the Contract Documents for a portion of the Work or unless the Contractor needs to provide such services in order to carry out the Contractor's responsibilities for construction means, methods, techniques, sequences, and procedures. The Contractor shall not be required to provide professional services in violation of applicable law.

§ 3.12.10.1 If professional design services or certifications by a design professional related to systems, materials, or equipment are specifically required of the Contractor by the Contract Documents, the Owner and the Design Consultant will specify all performance and design criteria that such services must satisfy. The Contractor shall be entitled to rely upon the adequacy and accuracy of the performance and design criteria provided in the Contract Documents. The Contractor shall cause such services or certifications to be provided by an appropriately licensed design professional, whose signature and seal shall appear on all drawings, calculations, specifications, certifications, Shop Drawings, and other submittals prepared by such professional. Shop Drawings, and other submittals related to the Work, designed or certified by such professional, if prepared by others, shall bear such professional's written approval when submitted to the Design Consultant. The Owner and the Design Consultant shall be entitled to rely upon the adequacy and accuracy of the services, certifications, and approvals performed or provided by such design professionals, provided the Owner and Design Consultant have specified to the Contractor the performance and design criteria that such services must satisfy. Pursuant to this Section 3.12.10, the Design Consultant will review and approve or take other appropriate action on submittals only for the limited purpose of checking for conformance with information given and the design concept expressed in the Contract Documents.

§ 3.12.10.2 If the Contract Documents require the Contractor's design professional to certify that the Work has been performed in accordance with the design criteria, the Contractor shall furnish such certifications to the Design Consultant at the time and in the form specified by the Design Consultant.

§ 3.13 Use of Site

The Contractor shall confine operations at the site to areas permitted by applicable laws, statutes, ordinances, codes, rules and regulations, lawful orders of public authorities, and the Contract Documents and shall not unreasonably encumber the site with materials or equipment.

§ 3.14 Cutting and Patching

§ 3.14.1 The Contractor shall be responsible for cutting, fitting, or patching required to complete the Work or to make its parts fit together properly. All areas requiring cutting, fitting, or patching shall be restored to the condition existing prior to the cutting, fitting, or patching, unless otherwise required by the Contract Documents.

§ 3.14.2 The Contractor shall not damage or endanger a portion of the Work or fully or partially completed construction of the Owner or Separate Contractors by cutting, patching, or otherwise altering such construction, or by excavation. The Contractor shall not cut or otherwise alter construction by the Owner or a Separate Contractor except with written consent of the Owner and of the Separate Contractor. Consent shall not be unreasonably withheld. The Contractor shall not unreasonably withhold, from the Owner or a Separate Contractor, its consent to

AIA Document A201 – 2017. Copyright © 1911, 1915, 1918, 1925, 1937, 1951, 1958, 1961, 1963, 1966, 1970, 1976, 1987, 1997, 2007 and 2017. All rights reserved. "The American Institute of Architects," "American Institute of Architects," "AIA," the AIA Logo, and "AIA Contract Documents" are trademarks of The American Institute of Architects. This document was produced at 15:45:22 CDT on 05/11/2026 under Subscription No.20240042832 which expires on 07/01/2026, is not for resale, is licensed for one-time use only, and may only be used in accordance with the AIA Contract Documents® Terms of Service. To report copyright violations, e-mail docinfo@aiacontracts.com.
User Notes: (69f1008b5f1b2d23ced2487a)

cutting or otherwise altering the Work.

§ 3.15 Cleaning Up

§ 3.15.1 The Contractor shall keep the premises and surrounding area free from accumulation of waste materials and rubbish caused by operations under the Contract. At completion of the Work, the Contractor shall remove waste materials, rubbish, the Contractor's tools, construction equipment, machinery, and surplus materials from and about the Project.

§ 3.15.2 If the Contractor fails to clean up as provided in the Contract Documents, the Owner may do so and the Owner shall be entitled to reimbursement from the Contractor.

§ 3.16 Access to Work

The Contractor shall provide the Owner and Design Consultant with access to the Work in preparation and progress wherever located.

§ 3.17 Royalties, Patents and Copyrights

The Contractor shall pay all royalties and license fees. The Contractor shall defend suits or claims for infringement of copyrights and patent rights and shall hold the Owner and Design Consultant harmless from loss on account thereof, but shall not be responsible for defense or loss when a particular design, process, or product of a particular manufacturer or manufacturers is required by the Contract Documents, or where the copyright violations are contained in Drawings, Specifications, or other documents prepared by the Owner or Design Consultant. However, if an infringement of a copyright or patent is discovered by, or made known to, the Contractor, the Contractor shall be responsible for the loss unless the information is promptly furnished to the Owner and/or Design Consultant.

§ 3.18 Indemnification

§ 3.18.1 To the fullest extent permitted by law, the Contractor shall indemnify and hold harmless the Owner, Design Consultant, Design Consultant's consultants, and agents and employees of any of them from and against claims, damages, losses, and expenses, including but not limited to attorneys' fees, arising out of or resulting from performance of the Work, provided that such claim, damage, loss, or expense is attributable to bodily injury, sickness, disease or death, or to injury to or destruction of tangible property (other than the Work itself), but only to the extent caused by the negligent acts or omissions of the Contractor, a Subcontractor, anyone directly or indirectly employed by them, or anyone for whose acts they may be liable, regardless of whether or not such claim, damage, loss, or expense is caused in part by a party indemnified hereunder. Such obligation shall not be construed to negate, abridge, or reduce other rights or obligations of indemnity that would otherwise exist as to a party or person described in this Section 3.18.

§ 3.18.2 In claims against any person or entity indemnified under this Section 3.18 by an employee of the Contractor, a Subcontractor, anyone directly or indirectly employed by them, or anyone for whose acts they may be liable, the indemnification obligation under Section 3.18.1 shall not be limited by a limitation on amount or type of damages, compensation, or benefits payable by or for the Contractor or a Subcontractor under workers' compensation acts, disability benefit acts, or other employee benefit acts.

ARTICLE 4 Design Consultant

§ 4.1 General

§ 4.1.1 The Design Consultantt is the person or entity retained by the Owner pursuant to Section 2.3.2 and identified as such in the Agreement.

§ 4.1.2 Duties, responsibilities, and limitations of authority of the Design Consultant as set forth in the Contract Documents shall not be restricted, modified, or extended without written consent of the Owner, Contractor, and Design Consultant. Consent shall not be unreasonably withheld.

§ 4.2 Administration of the Contract

§ 4.2.1 The Design Consultant will provide administration of the Contract as described in the Contract Documents and will be an Owner's representative during construction until the date the Owner issues the final Certificate for Payment from time to time during the one-year period for correction of Work described in Section 12.2.. The Design Consultant will have authority to act on behalf of the Owner only to the extent provided in the Contract Documents.

AIA Document A201 – 2017. Copyright © 1911, 1915, 1918, 1925, 1937, 1951, 1958, 1961, 1963, 1966, 1970, 1976, 1987, 1997, 2007 and 2017. All rights reserved. "The American Institute of Architects," "American Institute of Architects," "AIA," the AIA Logo, and "AIA Contract Documents" are trademarks of The American Institute of Architects. This document was produced at 15:45:22 CDT on 05/11/2026 under Subscription No.20240042832 which expires on 07/01/2026, is not for resale, is licensed for one-time use only, and may only be used in accordance with the AIA Contract Documents® Terms of Service. To report copyright violations, e-mail docinfo@aiacontracts.com.
User Notes: (69f1008b5f1b2d23ced2487a)

§ 4.2.2 The Design Consultant will visit the site at intervals appropriate to the stage of construction, or as otherwise agreed with the Owner, to become generally familiar with the progress and quality of the portion of the Work completed, and to determine in general if the Work observed is being performed in a manner indicating that the Work, when fully completed, will be in accordance with the Contract Documents. However, the Design Consultant will not be required to make exhaustive or continuous on-site inspections to check the quality or quantity of the Work. The Design Consultant will not have control over, charge of, or responsibility for the construction means, methods, techniques, sequences or procedures, or for the safety precautions and programs in connection with the Work, since these are solely the Contractor's rights and responsibilities under the Contract Documents, unless otherwise modified in writing in accordance with other provisions of the Contract.

§ 4.2.3 On the basis of the site visits, the Design Consultant will keep the Owner reasonably informed about the progress and quality of the portion of the Work completed, and promptly report to the Owner (1) known deviations from the Contract Documents, (2) known deviations from the most recent construction schedule submitted by the Contractor, and (3) defects and deficiencies observed in the Work. The Design Consultant will not be responsible for the Contractor's failure to perform the Work in accordance with the requirements of the Contract Documents. The Design Consultant will not have control over or charge of, and will not be responsible for acts or omissions of, the Contractor, Subcontractors, or their agents or employees, or any other persons or entities performing portions of the Work.

§ 4.2.4 Communications
The Owner and Contractor shall include the Design Consultant in all communications that relate to or affect the Design Consultant's services or professional responsibilities. The Owner shall promptly notify the Design Consultant of the substance of any direct communications between the Owner and the Contractor otherwise relating to the Project. Communications by and with the Design Consultant's consultants shall be through the Design Consultant. Communications by and with Subcontractors and suppliers shall be through the Contractor. Communications by and with Separate Contractors shall be through the Owner. The Contract Documents may specify other communication protocols., Owner's representive should be included in all relevent communications.

§ 4.2.5 Based on the Design Consultant's evaluations of the Contractor's Applications for Payment, the Design Consultant will review and certify the amounts due the Contractor and will issue Certificates for Payment in such amounts.

§ 4.2.6 The Design Consultant has authority to reject Work that does not conform to the Contract Documents. Whenever the Design Consultant considers it necessary or advisable, the Design Consultant will have authority to require inspection or testing of the Work in accordance with Sections 13.4.2 and 13.4.3, whether or not the Work is fabricated, installed or completed. However, neither this authority of the Design Consultant nor a decision made in good faith either to exercise or not to exercise such authority shall give rise to a duty or responsibility of the Design Consultant to the Contractor, Subcontractors, suppliers, their agents or employees, or other persons or entities performing portions of the Work.

§ 4.2.7 The Design Consultant will review and approve, or take other appropriate action upon, the Contractor's submittals such as Shop Drawings, Product Data, and Samples, but only for the limited purpose of checking for conformance with information given and the design concept expressed in the Contract Documents. The Design Consultant's action will be taken in accordance with the submittal schedule approved by the Design Consultant or, in the absence of an approved submittal schedule, with reasonable promptness while allowing sufficient time in the Design Consultant's professional judgment to permit adequate review. Review of such submittals is not conducted for the purpose of determining the accuracy and completeness of other details such as dimensions and quantities, or for substantiating instructions for installation or performance of equipment or systems, all of which remain the responsibility of the Contractor as required by the Contract Documents. The Design Consultant's review of the Contractor's submittals shall not relieve the Contractor of the obligations under Sections 3.3, 3.5, and 3.12. The Design Consultant's review shall not constitute approval of safety precautions or of any construction means, methods, techniques, sequences, or procedures. The Design Consultant's approval of a specific item shall not indicate approval of an assembly of which the item is a component.

§ 4.2.8 The Design Consultant will assist in preparing Change Orders and Construction Change Directives, and may order minor changes in the Work as provided in Section 7.4. The Design Consultant will investigate and make determinations and recommendations regarding concealed and unknown conditions as provided in Section 3.7.4.

AIA Document A201 – 2017. Copyright © 1911, 1915, 1918, 1925, 1937, 1951, 1958, 1961, 1963, 1966, 1970, 1976, 1987, 1997, 2007 and 2017. All rights reserved. "The American Institute of Architects," "American Institute of Architects," "AIA," the AIA Logo, and "AIA Contract Documents" are trademarks of The American Institute of Architects. This document was produced at 15:45:22 CDT on 05/11/2026 under Subscription No.20240042832 which expires on 07/01/2026, is not for resale, is licensed for one-time use only, and may only be used in accordance with the AIA Contract Documents® Terms of Service. To report copyright violations, e-mail docinfo@aiacontracts.com.
User Notes: (69f1008b5f1b2d23ced2487a)

§ 4.2.9 The Design Consultant will conduct inspections to determine the date or dates of Substantial Completion and the date of final completion; issue Certificates of Substantial Completion pursuant to Section 9.8; receive and forward to the Owner, for the Owner's review and records, written warranties and related documents required by the Contract and assembled by the Contractor pursuant to Section 9.10; and issue a final Certificate for Payment pursuant to Section 9.10.

§ 4.2.10 If the Owner and Design Consultant agree, the Design Consultant will provide one or more Project representatives to assist in carrying out the Design Consultant's responsibilities at the site. The Owner shall notify the Contractor of any change in the duties, responsibilities and limitations of authority of the Project representatives.

§ 4.2.11 The Design Consultant will interpret and decide matters concerning performance under, and requirements of, the Contract Documents on written request of either the Owner or Contractor. The Design Consultant's response to such requests will be made in writing within any time limits agreed upon or otherwise with reasonable promptness.

§ 4.2.12 Interpretations and decisions of the Design Consultant will be consistent with the intent of, and reasonably inferable from, the Contract Documents and will be in writing or in the form of drawings. When making such interpretations and decisions, the Design Consultant will endeavor to secure faithful performance by both Owner and Contractor, will not show partiality to either, and will not be liable for results of interpretations or decisions rendered in good faith.

§ 4.2.14 The Design Consultant will review and respond to requests for information about the Contract Documents. The Design Consultant's response to such requests will be made in writing within any time limits agreed upon or otherwise with reasonable promptness. If appropriate, the Design Consultant will prepare and issue supplemental Drawings and Specifications in response to the requests for information.

ARTICLE 5 SUBCONTRACTORS

§ 5.1 Definitions

§ 5.1.1 A Subcontractor is a person or entity who has a direct contract with the Contractor to perform a portion of the Work at the site. The term "Subcontractor" is referred to throughout the Contract Documents as if singular in number and means a Subcontractor or an authorized representative of the Subcontractor. The term "Subcontractor" does not include a Separate Contractor or the subcontractors of a Separate Contractor.

§ 5.1.2 A Sub-subcontractor is a person or entity who has a direct or indirect contract with a Subcontractor to perform a portion of the Work at the site. The term "Sub-subcontractor" is referred to throughout the Contract Documents as if singular in number and means a Sub-subcontractor or an authorized representative of the Sub-subcontractor.

§ 5.2 Award of Subcontracts and Other Contracts for Portions of the Work

§ 5.2.1 Unless otherwise stated in the Contract Documents, the apparent low bidder, within (3) days after bids are opened shall notify the Owner and Design Consultant of the persons or entities proposed for each principal portion of the Work, including those who are to furnish materials or equipment fabricated to a special design. Within 14 days of receipt of the information, the Design Consultant may notify the Contractor whether the Owner or the Design Consultant (1) has reasonable objection to any such proposed person or entity or (2) requires additional time for review. Failure of the Design Consultant to provide notice within the 14-day period shall constitute notice of no reasonable objection.

§ 5.2.2 The Contractor shall not contract with a proposed person or entity to whom the Owner or Design Consultant has made reasonable and timely objection. The Contractor shall not be required to contract with anyone to whom the Contractor has made reasonable objection.

§ 5.2.3 If the Owner or Design Consultant has reasonable objection to a person or entity proposed by the Contractor, the Contractor shall propose another to whom the Owner or Design Consultant has no reasonable objection. If the proposed but rejected Subcontractor was reasonably capable of performing the Work, the Contract Sum and Contract Time shall be increased or decreased by the difference, if any, occasioned by such change, and an appropriate Change Order shall be issued before commencement of the substitute Subcontractor's Work. However, no increase in the Contract Sum or Contract Time shall be allowed for such change unless the Contractor has acted

AIA Document A201 – 2017. Copyright © 1911, 1915, 1918, 1925, 1937, 1951, 1958, 1961, 1963, 1966, 1970, 1976, 1987, 1997, 2007 and 2017. All rights reserved. "The American Institute of Architects," "American Institute of Architects," "AIA," the AIA Logo, and "AIA Contract Documents" are trademarks of The American Institute of Architects. This document was produced at 15:45:22 CDT on 05/11/2026 under Subscription No.20240042832 which expires on 07/01/2026, is not for resale, is licensed for one-time use only, and may only be used in accordance with the AIA Contract Documents® Terms of Service. To report copyright violations, e-mail docinfo@aiacontracts.com.
User Notes: (69f1008b5f1b2d23ced2487a)

promptly and responsively in submitting names as required.

§ 5.2.4 The Contractor shall not substitute a Subcontractor, person, or entity for one previously selected if the Owner or Design Consultant makes reasonable objection to such substitution.

§ 5.3 Subcontractual Relations

By appropriate written agreement, the Contractor shall require each Subcontractor, to the extent of the Work to be performed by the Subcontractor, to be bound to the Contractor by terms of the Contract Documents, and to assume toward the Contractor all the obligations and responsibilities, including the responsibility for safety of the Subcontractor's Work that the Contractor, by these Contract Documents, assumes toward the Owner and Design Consultant. Each subcontract agreement shall preserve and protect the rights of the Owner and Design Consultant under the Contract Documents with respect to the Work to be performed by the Subcontractor so that subcontracting thereof will not prejudice such rights, and shall allow to the Subcontractor, unless specifically provided otherwise in the subcontract agreement, the benefit of all rights, remedies, and redress against the Contractor that the Contractor, by the Contract Documents, has against the Owner. Where appropriate, the Contractor shall require each Subcontractor to enter into similar agreements with Sub-subcontractors. The Contractor shall make available to each proposed Subcontractor, prior to the execution of the subcontract agreement, copies of the Contract Documents to which the Subcontractor will be bound, and, upon written request of the Subcontractor, identify to the Subcontractor terms and conditions of the proposed subcontract agreement that may be at variance with the Contract Documents. Subcontractors will similarly make copies of applicable portions of such documents available to their respective proposed Sub-subcontractors.

§ 5.4 Contingent Assignment of Subcontracts

§ 5.4.1 Each subcontract agreement for a portion of the Work is assigned by the Contractor to the Owner, provided that

.1 assignment is effective only after termination of the Contract by the Owner for cause pursuant to Section 14.2 and only for those subcontract agreements that the Owner accepts by notifying the Subcontractor and Contractor; and

.2 assignment is subject to the prior rights of the surety, if any, obligated under bond relating to the Contract.

When the Owner accepts the assignment of a subcontract agreement, the Owner assumes the Contractor's rights and obligations under the subcontract.

§ 5.4.2 Upon such assignment, if the Work has been suspended for more than 30 days, the Subcontractor's compensation may equitably adjusted for increases in cost resulting from the suspension.

§ 5.4.3 Upon assignment to the Owner under this Section 5.4, the Owner may further assign the subcontract to a successor contractor or other entity. If the Owner assigns the subcontract to a successor contractor or other entity, the Owner shall nevertheless remain legally responsible for all of the successor contractor's obligations under the subcontract.

ARTICLE 6 CONSTRUCTION BY OWNER OR BY SEPARATE CONTRACTORS

§ 6.1 Owner's Right to Perform Construction and to Award Separate Contracts

§ 6.1.1 The term "Separate Contractor(s)" shall mean other contractors retained by the Owner under separate agreements. The Owner reserves the right to perform construction or operations related to the Project with the Owner's own forces, and with Separate Contractors retained under Conditions of the Contract substantially similar to those of this Contract, including those provisions of the Conditions of the Contract related to insurance and waiver of subrogation.

§ 6.1.2 When separate contracts are awarded for different portions of the Project or other construction or operations on the site, the term "Contractor" in the Contract Documents in each case shall mean the Contractor who executes each separate Owner-Contractor Agreement.

§ 6.1.3 The Owner shall provide for coordination of the activities of the Owner's own forces and of each Separate Contractor with the Work of the Contractor, who shall cooperate with them. The Contractor shall participate with any Separate Contractors and the Owner in reviewing their construction schedules. The Contractor shall make any revisions to its construction schedule deemed necessary after a joint review and mutual agreement. The construction

AIA Document A201 – 2017. Copyright © 1911, 1915, 1918, 1925, 1937, 1951, 1958, 1961, 1963, 1966, 1970, 1976, 1987, 1997, 2007 and 2017. All rights reserved. "The American Institute of Architects," "American Institute of Architects," "AIA," the AIA Logo, and "AIA Contract Documents" are trademarks of The American Institute of Architects. This document was produced at 15:45:22 CDT on 05/11/2026 under Subscription No.20240042832 which expires on 07/01/2026, is not for resale, is licensed for one-time use only, and may only be used in accordance with the AIA Contract Documents® Terms of Service. To report copyright violations, e-mail docinfo@aiacontracts.com.
User Notes: (69f1008b5f1b2d23ced2487a)

schedules shall then constitute the schedules to be used by the Contractor, Separate Contractors, and the Owner until subsequently revised.

§ 6.1.4 Unless otherwise provided in the Contract Documents, when the Owner performs construction or operations related to the Project with the Owner's own forces or with Separate Contractors, the Owner or its Separate Contractors shall have the same obligations and rights that the Contractor has under the Conditions of the Contract, including, without excluding others, those stated in Article 3, this Article 6, and Articles 10, 11, and 12.

§ 6.2 Mutual Responsibility

§ 6.2.1 The Contractor shall afford the Owner and Separate Contractors reasonable opportunity for introduction and storage of their materials and equipment and performance of their activities, and shall connect and coordinate the Contractor's construction and operations with theirs as required by the Contract Documents.

§ 6.2.2 If part of the Contractor's Work depends for proper execution or results upon construction or operations by the Owner or a Separate Contractor, the Contractor shall, prior to proceeding with that portion of the Work, promptly notify the Design Consultant of apparent discrepancies or defects in the construction or operations by the Owner or Separate Contractor that would render it unsuitable for proper execution and results of the Contractor's Work. Failure of the Contractor to notify the Design Consultant of apparent discrepancies or defects prior to proceeding with the Work shall constitute an acknowledgment that the Owner's or Separate Contractor's completed or partially completed construction is fit and proper to receive the Contractor's Work. The Contractor shall not be responsible for discrepancies or defects in the construction or operations by the Owner or Separate Contractor that are not apparent.

§ 6.2.3 The Contractor shall reimburse the Owner for costs the Owner incurs that are payable to a Separate Contractor because of the Contractor's delays, improperly timed activities or defective construction. .

§ 6.2.4 The Contractor shall promptly remedy damage that the Contractor wrongfully causes to completed or partially completed construction or to property of the Owner or Separate Contractor as provided in Section 10.2.5.

§ 6.2.5 The Owner and each Separate Contractor shall have the same responsibilities for cutting and patching as are described for the Contractor in Section 3.14.

§ 6.3 Owner's Right to Clean Up

If a dispute arises among the Contractor, Separate Contractors, and the Owner as to the responsibility under their respective contracts for maintaining the premises and surrounding area free from waste materials and rubbish, the Owner may clean up and the Design Consultant will allocate the cost among those responsible.

ARTICLE 7 CHANGES IN THE WORK

§ 7.1 General

§ 7.1.1 Changes in the Work may be accomplished after execution of the Contract, and without invalidating the Contract, by Change Order, subject to review by Owner. Construction Change Directive or order for a minor change in the Work should be used only in emergency situations. Changes in the Work are subject to the limitations stated in this Article 7 and elsewhere in the Contract Documents.

§ 7.1.2 A Change Order shall be based upon agreement among the Owner, Contractor, and Architect. A Construction Change Directive requires agreement by the Owner and Architect and may or may not be agreed to by the Contractor.

1. Changes for matters relatively minor and incidental to the original contract necessitated by unforeseen circumstances arising during the course of the Work.
2. Emergencies arising during the course of the Work of the Contract.
3. Changes or Alterations provided for the original bidding where there is no difference in price on the Change Order from the original best bid on the Alternate.
4. Changes of relatively minor items not contemplated when the plans and specifications were prepared and the Project was bid, which are in the public interest.

AIA Document A201 – 2017. Copyright © 1911, 1915, 1918, 1925, 1937, 1951, 1958, 1961, 1963, 1966, 1970, 1976, 1987, 1997, 2007 and 2017. All rights reserved. "The American Institute of Architects," "American Institute of Architects," "AIA," the AIA Logo, and "AIA Contract Documents" are trademarks of The American Institute of Architects. This document was produced at 15:45:22 CDT on 05/11/2026 under Subscription No.20240042832 which expires on 07/01/2026, is not for resale, is licensed for one-time use only, and may only be used in accordance with the AIA Contract Documents® Terms of Service. To report copyright violations, e-mail docinfo@aiacontracts.com.
User Notes: (69f1008b5f1b2d23ced2487a)

§ 7.1.3 Changes in the Work shall be performed under applicable provisions of the Contract Documents. The Contractor shall proceed promptly with changes in the Work, unless otherwise provided in the Change Order, Construction Change Directive, or order for a minor change in the Work.

§ 7.2 Change Orders

§ 7.2.1 A Change Order is a written instrument signed by the Owner, Contractor, and Design Consultant stating their agreement upon all of the following:

.1 The change in the Work;

.2 The amount of the adjustment, if any, in the Contract Sum; and

.3 The extent of the adjustment, if any, in the Contract Time.

.4 There shall be attached to each Change Order, a signed statement from the Design Consultant containing the following:

A. A statement of what the Change Order covers and who instituted the Change Order and why it is necessary or desired.

B. A statement setting forth the reasons for using the Change Order method rather than taking new competitive bids.

C. A statement that all prices have been reviewed and found reasonable, fair, and equitable and recommending approval of the same.

§ 7.2.2 Change Orders shall only be utilized to the extent they do not violate Title 39, Code of Alabama, 1975, as amended.

§ 7.3 Construction Change Directives

§ 7.3.1 A Construction Change Directive is a written order prepared by the Design Consultant and signed by the Owner and Design Consultant, directing a change in the Work prior to agreement on adjustment, if any, in the Contract Sum or Contract Time, or both. The Owner may by Construction Change Directive, without invalidating the Contract, order changes in the Work within the general scope of the Contract consisting of additions, deletions, or other revisions, the Contract Sum and Contract Time being adjusted accordingly. This is only to be used when necessitated by emergency, and should be followed up with a Change Order and to the extend allowed by Alabama Code Title 39.

§ 7.3.2 A Construction Change Directive shall be used in the absence of total agreement on the terms of a Change Order.

§ 7.3.3 If the Construction Change Directive provides for an adjustment to the Contract Sum, the adjustment shall be based on one of the following methods:

.1 Mutual acceptance of a lump sum properly itemized and supported by sufficient substantiating data to permit evaluation;

.2 Unit prices stated in the Contract Documents or subsequently agreed upon;

.3 Cost to be determined in a manner agreed upon by the parties and a mutually acceptable fixed or percentage fee; or

.4 As provided in Section 7.3.4.

§ 7.3.4 If the Contractor does not respond promptly or disagrees with the method for adjustment in the Contract Sum, the Design Consultant shall determine the adjustment on the basis of reasonable expenditures and savings of those performing the Work attributable to the change, including, in case of an increase in the Contract Sum, an amount for overhead and profit as set forth in the Agreement, or if no such amount is set forth in the Agreement, a reasonable amount. In such case, and also under Section 7.3.3.3, the Contractor shall keep and present, in such form as the Design Consultant may prescribe, an itemized accounting together with appropriate supporting data. Unless otherwise provided in the Contract Documents, costs for the purposes of this Section 7.3.4 shall be limited to the following:

.1 Costs of labor, including applicable payroll taxes, fringe benefits required by agreement or custom, workers' compensation insurance, and other employee costs approved by the Design Consultant;

.2 Costs of materials, supplies, and equipment, including cost of transportation, whether incorporated or consumed;

.3 Rental costs of machinery and equipment, exclusive of hand tools, whether rented from the Contractor or others;

AIA Document A201 – 2017. Copyright © 1911, 1915, 1918, 1925, 1937, 1951, 1958, 1961, 1963, 1966, 1970, 1976, 1987, 1997, 2007 and 2017. All rights reserved. "The American Institute of Architects," "American Institute of Architects," "AIA," the AIA Logo, and "AIA Contract Documents" are trademarks of The American Institute of Architects. This document was produced at 15:45:22 CDT on 05/11/2026 under Subscription No.20240042832 which expires on 07/01/2026, is not for resale, is licensed for one-time use only, and may only be used in accordance with the AIA Contract Documents® Terms of Service. To report copyright violations, e-mail docinfo@aiacontracts.com.
User Notes: (69f1008b5f1b2d23ced2487a)

.4 Costs of premiums for all bonds and insurance, permit fees, and sales, use, or similar taxes, directly related to the change; and

.5 Costs of supervision and field office personnel directly attributable to the change.

§ 7.3.5 If the Contractor disagrees with the adjustment in the Contract Time, the Contractor may make a Claim in accordance with applicable provisions of Article 15.

§ 7.3.6 Upon receipt of a Construction Change Directive, the Contractor shall promptly proceed with the change in the Work involved and advise the Design Consultant of the Contractor's agreement or disagreement with the method, if any, provided in the Construction Change Directive for determining the proposed adjustment in the Contract Sum or Contract Time.

§ 7.3.7 A Construction Change Directive signed by the Contractor indicates the Contractor's agreement therewith, including adjustment in Contract Sum and Contract Time or the method for determining them. Such agreement shall be effective immediately and shall be recorded as a Change Order.

§ 7.3.8 The amount of credit to be allowed by the Contractor to the Owner for a deletion or change that results in a net decrease in the Contract Sum shall be actual net cost as confirmed by the Design Consultant. When both additions and credits covering related Work or substitutions are involved in a change, the allowance for overhead and profit shall be figured on the basis of net increase, if any, with respect to that change.

§ 7.3.9 Pending final determination of the total cost of a Construction Change Directive to the Owner, the Contractor may request payment for Work completed under the Construction Change Directive in Applications for Payment. The Design Consultant will make an interim determination for purposes of monthly certification for payment for those costs and certify for payment the amount that the Design Consultant determines, in the Design Consultant's professional judgment, to be reasonably justified. The Design Consultant's interim determination of cost shall adjust the Contract Sum on the same basis as a Change Order, subject to the right of either party to disagree and assert a Claim in accordance with Article 15.

§ 7.3.10 When the Owner and Contractor agree with a determination made by the Design Consultant concerning the adjustments in the Contract Sum and Contract Time, or otherwise reach agreement upon the adjustments, such agreement shall be effective immediately and the Design Consultant will prepare a Change Order. Change Orders may be issued for all or any part of a Construction Change Directive.

§ 7.4 Minor Changes in the Work

The Design Consultant may order minor changes in the Work that are consistent with the intent of the Contract Documents and do not involve an adjustment in the Contract Sum or an extension of the Contract Time. The Design Consultant's order for minor changes shall be in writing. If the Contractor believes that the proposed minor change in the Work will affect the Contract Sum or Contract Time, the Contractor shall notify the Design Consultant and shall not proceed to implement the change in the Work. If the Contractor performs the Work set forth in the Design Consultant's order for a minor change without prior notice to the Design Consultant that such change will affect the Contract Sum or Contract Time, the Contractor waives any adjustment to the Contract Sum or extension of the Contract Time.

ARTICLE 8 TIME

§ 8.1 Definitions

§ 8.1.1 Unless otherwise provided, Contract Time is the period of time, including authorized adjustments, allotted in the Contract Documents for Substantial Completion of the Work.

§ 8.1.2 The date of commencement of the Work is the date established in the Agreement.

§ 8.1.3 The date of Substantial Completion is the date certified by the Design Consultant in accordance with Section 9.8.

§ 8.1.4 The term "day" as used in the Contract Documents shall mean calendar day unless otherwise specifically defined.

AIA Document A201 – 2017. Copyright © 1911, 1915, 1918, 1925, 1937, 1951, 1958, 1961, 1963, 1966, 1970, 1976, 1987, 1997, 2007 and 2017. All rights reserved. "The American Institute of Architects," "American Institute of Architects," "AIA," the AIA Logo, and "AIA Contract Documents" are trademarks of The American Institute of Architects. This document was produced at 15:45:22 CDT on 05/11/2026 under Subscription No.20240042832 which expires on 07/01/2026, is not for resale, is licensed for one-time use only, and may only be used in accordance with the AIA Contract Documents® Terms of Service. To report copyright violations, e-mail docinfo@aiacontracts.com.
User Notes: (69f1008b5f1b2d23ced2487a)

§ 8.2 Progress and Completion

§ 8.2.1 Time limits stated in the Contract Documents are of the essence of the Contract. By executing the Agreement, the Contractor confirms that the Contract Time is a reasonable period for performing the Work.

§ 8.2.2 The Contractor shall not knowingly, except by agreement or instruction of the Owner in writing, commence the Work prior to the effective date of insurance required to be furnished by the Contractor and Owner.

§ 8.2.3 The Contractor shall proceed expeditiously with adequate forces and shall achieve Substantial Completion within the Contract Time.

§ 8.3 Delays and Extensions of Time

§ 8.3.1 If the Contractor is delayed at any time in the commencement or progress of the Work by (1) an act or neglect of the Owner or Design Consultant, of an employee of either, or of a Separate Contractor; (2) by changes ordered in the Work; (3) by labor disputes, fire, unusual delay in deliveries, unavoidable casualties, adverse weather conditions documented in accordance with Section 15.1.6.2, or other causes beyond the Contractor's control; (4) by delay authorized by the Owner pending mediation and binding dispute resolution; or (5) by other causes that the Contractor asserts, and the Design Consultant determines, justify delay, then the Contract Time shall be extended for such reasonable time as the Design Consultant may determine.

§ 8.3.2 Claims relating to time shall be made in accordance with applicable provisions of Article 15.

§ 8.3.3 This Section 8.3 does not preclude recovery of damages for delay by either party under other provisions of the Contract Documents.

§ 8.4 Liquidated Damages § 8.4.1 Time is the essence of the Contract. Any delay in the completion of the Work as provided for in the Contract Documents will cause inconvenience to the public and loss and damage to the Owner in interest, and in additional administrative, architectural, inspection, and supervision charges. Therefore, a time charge equal to ($250.00) per calendar day will be made against the Contractor for the entire period that any part of the Work remains uncompleted or any required closeout documents are not acceptably submitted for more that (30) days after the time specified for the Substantial Completion of the Work, the amount of which shall be deducted by the Owner, and shall be retained by the Owner out of monies otherwise due the Contractor in the final payment, not as a penalty, but as liquidated damages sustained.

ARTICLE 9 PAYMENTS AND COMPLETION

§ 9.1 Contract Sum

§ 9.1.1 The Contract Sum is stated in the Agreement and, including authorized adjustments, is the total amount payable by the Owner to the Contractor for performance of the Work under the Contract Documents.

§ 9.1.2 If unit prices are stated in the Contract Documents or subsequently agreed upon, and if quantities originally contemplated are materially changed so that application of such unit prices to the actual quantities causes substantial inequity to the Owner or Contractor, the applicable unit prices shall be equitably adjusted, to the extent allowed by Title 39, Code of Alabama 1975 as amended.

§ 9.2 Schedule of Values

Where the Contract is based on a stipulated sum or Guaranteed Maximum Price, the Contractor shall submit a schedule of values to the Design Consultant before the first Application for Payment, allocating the entire Contract Sum to the various portions of the Work. The schedule of values shall be prepared in the form, and supported by the data to substantiate its accuracy, required by the Design Consultant. This schedule, unless objected to by the Design Consultant, shall be used as a basis for reviewing the Contractor's Applications for Payment. Any changes to the schedule of values shall be submitted to the Design Consultant and supported by such data to substantiate its accuracy as the Design Consultant may require, and unless objected to by the Design Consultant, shall be used as a basis for reviewing the Contractor's subsequent Applications for Payment.

§ 9.3 Applications for Payment

§ 9.3.1 The Contractor shall submit to the Design Consultant on the first of each month for Work performed through the 25th of the preceding month, four (4) original, itemized Applications for Payment for Work completed in accordance with the accepted schedule of values, if required under Section 9.2, for completed portions of the Work. The application shall be notarized and supported by all data substantiating the Contractor's right to payment that the

AIA Document A201 – 2017. Copyright © 1911, 1915, 1918, 1925, 1937, 1951, 1958, 1961, 1963, 1966, 1970, 1976, 1987, 1997, 2007 and 2017. All rights reserved. "The American Institute of Architects," "American Institute of Architects," "AIA," the AIA Logo, and "AIA Contract Documents" are trademarks of The American Institute of Architects. This document was produced at 15:45:22 CDT on 05/11/2026 under Subscription No.20240042832 which expires on 07/01/2026, is not for resale, is licensed for one-time use only, and may only be used in accordance with the AIA Contract Documents® Terms of Service. To report copyright violations, e-mail docinfo@aiacontracts.com.
User Notes: (69f1008b5f1b2d23ced2487a)

Owner or Design Consultant require, such copies of requisitions, and releases and waivers of liens from Subcontractors and suppliers, and shall reflect retainage and documents as follows: 1. Until the final payment is made, the Owner shall pay ninety-seven and one half percent (97.5%) of the amount due the Contractor on account of progress payments (note: the 2-1/2% retainage is calculated by withholding the first 5% of the first 50% of the Work completed); and 2. The Contractor shall provide documentation substantiating that test, inspections and approvals for portions of Work included in an Application for Payment and required by the Contract Documents, or by laws, ordinances, rules, regulations or orders of public authorities having jurisdiction were made at the appropriate time.

§ 9.3.1.1 Such applications may include requests for payment on account of changes in the Work, which have been authorized and approved by properly executed Change Order(s).

§ 9.3.1.2 Applications for Payment shall not include requests for payment for portions of the Work for which the Contractor does not intend to pay a Subcontractor or supplier, unless such Work has been performed by others whom the Contractor intends to pay.

§ 9.3.2 Unless otherwise provided in the Contract Documents, payments shall be made on account of materials and equipment delivered and suitably stored at the site for subsequent incorporation in the Work. If approved in advance by the Owner, payment may similarly be made for materials and equipment suitably stored off the site at a location agreed upon in writing. Payment for materials and equipment stored on or off the site shall be conditioned upon compliance by the Contractor with procedures satisfactory to the Owner to establish the Owner's title to such materials and equipment or otherwise protect the Owner's interest, and shall include the costs of applicable insurance, storage, and transportation to the site, for such materials and equipment stored off the site.

§ 9.3.3 The Contractor warrants that title to all Work covered by an Application for Payment will pass to the Owner no later than the time of payment. The Contractor further warrants that upon submittal of an Application for Payment all Work for which Certificates for Payment have been previously issued and payments received from the Owner shall, to the best of the Contractor's knowledge, information, and belief, be free and clear of liens, claims, security interests, or encumbrances, in favor of the Contractor, Subcontractors, suppliers, or other persons or entities that provided labor, materials, and equipment relating to the Work.

§ 9.4 Certificates for Payment

§ 9.4.1 The Design Consultant will, within seven days after receipt of the Contractor's Application for Payment, either (1) issue to the Owner a Certificate for Payment in the full amount of the Application for Payment, with a copy to the Contractor; or (2) issue to the Owner a Certificate for Payment for such amount as the Design Consultant determines is properly due, and notify the Contractor and Owner of the Design Consultant's reasons for withholding certification in part as provided in Section 9.5.1; or (3) withhold certification of the entire Application for Payment, and notify the Contractor and Owner of the Design Consultant's reason for withholding certification in whole as provided in Section 9.5.1.

§ 9.4.2 The issuance of a Certificate for Payment will constitute a representation by the Design Consultant to the Owner, based on the Design Consultant's evaluation of the Work and the data in the Application for Payment, that, to the best of the Design Consultant's knowledge, information, and belief, the Work has progressed to the point indicated, the quality of the Work is in accordance with the Contract Documents, and that the Contractor is entitled to payment in the amount certified. The foregoing representations are subject to an evaluation of the Work for conformance with the Contract Documents upon Substantial Completion, to results of subsequent tests and inspections, to correction of minor deviations from the Contract Documents prior to completion, and to specific qualifications expressed by the Design Consultant. However, the issuance of a Certificate for Payment will not be a representation that the Design Consultant has (1) made exhaustive or continuous on-site inspections to check the quality or quantity of the Work; (2) reviewed construction means, methods, techniques, sequences, or procedures; (3) reviewed copies of requisitions received from Subcontractors and suppliers and other data requested by the Owner to substantiate the Contractor's right to payment; or (4) made examination to ascertain how or for what purpose the Contractor has used money previously paid on account of the Contract Sum.

§ 9.5 Decisions to Withhold Certification

§ 9.5.1 The Design Consultant may withhold a Certificate for Payment in whole or in part, to the extent reasonably necessary to protect the Owner, if in the Design Consultant's opinion the representations to the Owner required by Section 9.4.2 cannot be made. If the Design Consultant is unable to certify payment in the amount of the Application, the Design Consultant will notify the Contractor and Owner as provided in Section 9.4.1. If the

AIA Document A201 – 2017. Copyright © 1911, 1915, 1918, 1925, 1937, 1951, 1958, 1961, 1963, 1966, 1970, 1976, 1987, 1997, 2007 and 2017. All rights reserved. "The American Institute of Architects," "American Institute of Architects," "AIA," the AIA Logo, and "AIA Contract Documents" are trademarks of The American Institute of Architects. This document was produced at 15:45:22 CDT on 05/11/2026 under Subscription No.20240042832 which expires on 07/01/2026, is not for resale, is licensed for one-time use only, and may only be used in accordance with the AIA Contract Documents® Terms of Service. To report copyright violations, e-mail docinfo@aiacontracts.com.
User Notes: (69f1008b5f1b2d23ced2487a)

Contractor and Design Consultant cannot agree on a revised amount, the Design Consultant will promptly issue a Certificate for Payment for the amount for which the Design Consultant is able to make such representations to the Owner. The Design Consultant may also withhold a Certificate for Payment or, because of subsequently discovered evidence, may nullify the whole or a part of a Certificate for Payment previously issued, to such extent as may be necessary in the Design Consultant's opinion to protect the Owner from loss for which the Contractor is responsible, including loss resulting from acts and omissions described in Section 3.3.2, because of

.1 defective Work not remedied;

.2 third party claims filed or reasonable evidence indicating probable filing of such claims, unless security acceptable to the Owner is provided by the Contractor;

.3 failure of the Contractor to make payments properly to Subcontractors or suppliers for labor, materials or equipment;

.4 reasonable evidence that the Work cannot be completed for the unpaid balance of the Contract Sum;

.5 damage to the Owner or a Separate Contractor;

.6 reasonable evidence that the Work will not be completed within the Contract Time, and that the unpaid balance would not be adequate to cover actual or liquidated damages for the anticipated delay; or

.7 repeated failure to carry out the Work in accordance with the Contract Documents.

§ 9.5.2 When either party disputes the Design Consultant's decision regarding a Certificate for Payment under Section 9.5.1, in whole or in part, that party may submit a Claim in accordance with Article 15.

§ 9.5.3 When the reasons for withholding certification are removed, certification will be made for amounts previously withheld.

§ 9.5.4 If the Design Consultant withholds certification for payment under Section 9.5.1.3, the Owner may, at its sole option, issue joint checks to the Contractor and to any Subcontractor or supplier to whom the Contractor failed to make payment for Work properly performed or material or equipment suitably delivered. If the Owner makes payments by joint check, the Owner shall notify the Design Consultant and the Contractor shall reflect such payment on its next Application for Payment.

§ 9.6 Progress Payments

§ 9.6.1 After the Design Consultant has issued a Certificate for Payment, the Owner shall make payment in the manner and within the time provided in the Contract Documents, and shall so notify the Design Consultant.

§ 9.6.2 The Contractor shall pay each Subcontractor, no later than seven days after receipt of payment from the Owner, the amount to which the Subcontractor is entitled, reflecting percentages actually retained from payments to the Contractor on account of the Subcontractor's portion of the Work. The Contractor shall, by appropriate agreement with each Subcontractor, require each Subcontractor to make payments to Sub-subcontractors in a similar manner.

§ 9.6.3 The Design Consultant will, on request, furnish to a Subcontractor, if practicable, information regarding percentages of completion or amounts applied for by the Contractor and action taken thereon by the Design Consultant and Owner on account of portions of the Work done by such Subcontractor.

§ 9.6.4 The Owner has the right to request written evidence from the Contractor that the Contractor has properly paid Subcontractors and suppliers amounts paid by the Owner to the Contractor for subcontracted Work. If the Contractor fails to furnish such evidence within seven days, the Owner shall have the right to contact Subcontractors and suppliers to ascertain whether they have been properly paid. Neither the Owner nor Design Consultant shall have an obligation to pay, or to see to the payment of money to, a Subcontractor or supplier, except as may otherwise be required by law.

§ 9.6.5 The Contractor's payments to suppliers shall be treated in a manner similar to that provided in Sections 9.6.2, 9.6.3 and 9.6.4.

§ 9.6.6 A Certificate for Payment, a progress payment, or partial or entire use or occupancy of the Project by the Owner shall not constitute acceptance of Work not in accordance with the Contract Documents.

AIA Document A201 – 2017. Copyright © 1911, 1915, 1918, 1925, 1937, 1951, 1958, 1961, 1963, 1966, 1970, 1976, 1987, 1997, 2007 and 2017. All rights reserved. "The American Institute of Architects," "American Institute of Architects," "AIA," the AIA Logo, and "AIA Contract Documents" are trademarks of The American Institute of Architects. This document was produced at 15:45:22 CDT on 05/11/2026 under Subscription No.20240042832 which expires on 07/01/2026, is not for resale, is licensed for one-time use only, and may only be used in accordance with the AIA Contract Documents® Terms of Service. To report copyright violations, e-mail docinfo@aiacontracts.com.
User Notes: (69f1008b5f1b2d23ced2487a)

to by the insurer and authorized by public authorities having jurisdiction over the Project. Such partial occupancy or use may commence whether or not the portion is substantially complete, provided the Owner and Contractor have accepted in writing the responsibilities assigned to each of them for payments, retainage, if any, security, maintenance, heat, utilities, damage to the Work and insurance, and have agreed in writing concerning the period for correction of the Work and commencement of warranties required by the Contract Documents. When the Contractor considers a portion substantially complete, the Contractor shall prepare and submit a list to the Design Consultant as provided under Section 9.8.2. Consent of the Contractor to partial occupancy or use shall not be unreasonably withheld. The stage of the progress of the Work shall be determined by written agreement between the Owner and Contractor or, if no agreement is reached, by decision of the Design Consultant.

§ 9.9.2 Immediately prior to such partial occupancy or use, the Owner, Contractor, and Design Consultant shall jointly inspect the area to be occupied or portion of the Work to be used in order to determine and record the condition of the Work.

§ 9.9.3 Unless otherwise agreed upon, partial occupancy or use of a portion or portions of the Work shall not constitute acceptance of Work not complying with the requirements of the Contract Documents.

§ 9.10 Final Completion and Final Payment

§ 9.10.1 Upon receipt of the Contractor's notice that the Work is ready for final inspection and acceptance and upon receipt of a final Application for Payment, the Design Consultant will promptly make such inspection. When the Design Consultant finds the Work acceptable under the Contract Documents and the Contract fully performed, the Design Consultant will promptly issue a final Certificate for Payment stating that to the best of the Design Consultant's knowledge, information and belief, and on the basis of the Design Consultant's on-site visits and inspections, the Work has been completed in accordance with the Contract Documents and that the entire balance found to be due the Contractor and noted in the final Certificate is due and payable. The Design Consultant's final Certificate for Payment will constitute a further representation that conditions listed in Section 9.10.2 as precedent to the Contractor's being entitled to final payment have been fulfilled.

§ 9.10.2 Neither final payment nor any remaining retained percentage shall become due until the Contractor submits to the Design Consultant (1) an affidavit that payrolls, bills for materials and equipment, and other indebtedness connected with the Work for which the Owner or the Owner's property might be responsible or encumbered (less amounts withheld by Owner) have been paid or otherwise satisfied, (2) a certificate evidencing that insurance required by the Contract Documents to remain in force after final payment is currently in effect, (3) a written statement that the Contractor knows of no reason that the insurance will not be renewable to cover the period required by the Contract Documents, (4) consent of surety, if any, to final payment, (5) Contractors Affidavit of Release of Liens, (6) separate Releases or Waivers of Liens from Subcontractors and material and equipment suppliers, (7) written warranty on Contractor's letterhead covering materials and labor for one-year, and (8) the advertisement of completion. The Contractor shall provide proof of publication of Advertisement of completion in a local newspaper for three (3) consecutive weeks, as required in Title 39, Section 39-1-1, Subsection (f), of the Code of Alabama. The final 2.5% retained will not be paid until proof of publication is submitted and all written claims paid in full.This advertisement shall not begin until the City of Mobile has accepted the Project and other data establishing payment or satisfaction of obligations, such as receipts and releases and waivers of liens, claims, security interests, or encumbrances arising out of the Contract, to the extent and in such form as may be designated by the Owner.

§ 9.10.3 If, after Substantial Completion of the Work, final completion thereof is materially delayed through no fault of the Contractor or by issuance of Change Orders affecting final completion, and the Design Consultant so confirms, the Owner shall, upon application by the Contractor and certification by the Design Consultant, and without terminating the Contract, make payment of the balance due for that portion of the Work fully completed, corrected, and accepted. If the remaining balance for Work not fully completed or corrected is less than retainage stipulated in the Contract Documents, and if bonds have been furnished, the written consent of the surety to payment of the balance due for that portion of the Work fully completed and accepted shall be submitted by the Contractor to the Design Consultant prior to certification of such payment. Such payment shall be made under terms and conditions governing final payment, except that it shall not constitute a waiver of Claims.

§ 9.10.4 The making of final payment shall constitute a waiver of Claims by the Owner except those arising from

.1 liens, Claims, security interests, or encumbrances arising out of the Contract and unsettled;

.2 failure of the Work to comply with the requirements of the Contract Documents;

AIA Document A201 – 2017. Copyright © 1911, 1915, 1918, 1925, 1937, 1951, 1958, 1961, 1963, 1966, 1970, 1976, 1987, 1997, 2007 and 2017. All rights reserved. "The American Institute of Architects," "American Institute of Architects," "AIA," the AIA Logo, and "AIA Contract Documents" are trademarks of The American Institute of Architects. This document was produced at 15:45:22 CDT on 05/11/2026 under Subscription No.20240042832 which expires on 07/01/2026, is not for resale, is licensed for one-time use only, and may only be used in accordance with the AIA Contract Documents® Terms of Service. To report copyright violations, e-mail docinfo@aiacontracts.com.
User Notes: (69f1008b5f1b2d23ced2487a)

§ 9.6.7 Unless the Contractor provides the Owner with a payment bond in the full penal sum of the Contract Sum, payments received by the Contractor for Work properly performed by Subcontractors or provided by suppliers shall be held by the Contractor for those Subcontractors or suppliers who performed Work or furnished materials, or both, under contract with the Contractor for which payment was made by the Owner. Nothing contained herein shall require money to be placed in a separate account and not commingled with money of the Contractor, create any fiduciary liability or tort liability on the part of the Contractor for breach of trust, or entitle any person or entity to an award of punitive damages against the Contractor for breach of the requirements of this provision.

§ 9.6.8 Provided the Owner has fulfilled its payment obligations under the Contract Documents, the Contractor shall defend and indemnify the Owner from all loss, liability, damage or expense, including reasonable attorney's fees and litigation expenses, arising out of any lien claim or other claim for payment by any Subcontractor or supplier of any tier. Upon receipt of notice of a lien claim or other claim for payment, the Owner shall notify the Contractor. If approved by the applicable court, when required, the Contractor may substitute a surety bond for the property against which the lien or other claim for payment has been asserted.

§ 9.7 Failure of Payment

If the Design Consultant does not issue a Certificate for Payment, through no fault of the Contractor, within seven days after receipt of the Contractor's Application for Payment, or if the Owner does not pay the Contractor within seven days after the date established in the Contract Documents, the amount certified by the Design Consultant or awarded by binding dispute resolution, then the Contractor may, upon seven additional days' notice to the Owner and Design Consultant, stop the Work until payment of the amount owing has been received. The Contract Time shall be extended appropriately and the Contract Sum shall be increased by the amount of the Contractor's reasonable costs of shutdown, delay and start-up, plus interest as provided for in the Contract Documents.

§ 9.8 Substantial Completion

§ 9.8.1 Substantial Completion is the stage in the progress of the Work when the Work or designated portion thereof is sufficiently complete in accordance with the Contract Documents so that the Owner can occupy or utilize the Work for its intended use.

§ 9.8.2 When the Contractor considers that the Work, or a portion thereof which the Owner agrees to accept separately, is substantially complete, the Contractor shall prepare and submit to the Design Consultant a comprehensive list of items to be completed or corrected prior to final payment. Failure to include an item on such list does not alter the responsibility of the Contractor to complete all Work in accordance with the Contract Documents.

§ 9.8.3 Upon receipt of the Contractor's list, the Design Consultant will make an inspection to determine whether the Work or designated portion thereof is substantially complete. If the Design Consultant's inspection discloses any item, whether or not included on the Contractor's list, which is not sufficiently complete in accordance with the Contract Documents so that the Owner can occupy or utilize the Work or designated portion thereof for its intended use, the Contractor shall, before issuance of the Certificate of Substantial Completion, complete or correct such item upon notification by the Design Consultant. In such case, the Contractor shall then submit a request for another inspection by the Design Consultant to determine Substantial Completion.

§ 9.8.4 When the Work or designated portion thereof is substantially complete, the Design Consultant will prepare a Certificate of Substantial Completion that shall establish the date of Substantial Completion; establish responsibilities of the Owner and Contractor for security, maintenance, heat, utilities, damage to the Work and insurance; and fix the time within which the Contractor shall finish all items on the list accompanying the Certificate. Warranties required by the Contract Documents shall commence on the date of Substantial Completion of the Work or designated portion thereof unless otherwise provided in the Certificate of Substantial Completion.

§ 9.8.5 The Certificate of Substantial Completion shall be submitted to the Owner and Contractor for their written acceptance of responsibilities assigned to them in the Certificate. Upon such acceptance, and consent of surety if any, the Owner shall make payment of retainage applying to the Work or designated portion thereof. Such payment shall be adjusted for Work that is incomplete or not in accordance with the requirements of the Contract Documents.

§ 9.9 Partial Occupancy or Use

§ 9.9.1 The Owner may occupy or use any completed or partially completed portion of the Work at any stage when such portion is designated by separate agreement with the Contractor, provided such occupancy or use is consented

AIA Document A201 – 2017. Copyright © 1911, 1915, 1918, 1925, 1937, 1951, 1958, 1961, 1963, 1966, 1970, 1976, 1987, 1997, 2007 and 2017. All rights reserved. "The American Institute of Architects," "American Institute of Architects," "AIA," the AIA Logo, and "AIA Contract Documents" are trademarks of The American Institute of Architects. This document was produced at 15:45:22 CDT on 05/11/2026 under Subscription No.20240042832 which expires on 07/01/2026, is not for resale, is licensed for one-time use only, and may only be used in accordance with the AIA Contract Documents® Terms of Service. To report copyright violations, e-mail docinfo@aiacontracts.com.
User Notes: (69f1008b5f1b2d23ced2487a)

.3 terms of special warranties required by the Contract Documents; or

.4 audits performed by the Owner, if permitted by the Contract Documents, after final payment.

§ 9.10.5 Acceptance of final payment by the Contractor, a Subcontractor, or a supplier, shall constitute a waiver of claims by that payee except those previously made in writing and identified by that payee as unsettled at the time of final Application for Payment.

ARTICLE 10 PROTECTION OF PERSONS AND PROPERTY

§ 10.1 Safety Precautions and Programs

The Contractor shall be responsible for initiating, maintaining, and supervising all safety precautions and programs in connection with the performance of the Contract.

§ 10.2 Safety of Persons and Property

§ 10.2.1 The Contractor shall comply with all Federal, State, and Local law regarding safety including the requirements of the Occupational Safety and Health Act of 1970, Public Law #91-596, latest version. Contractor shall take all other reasonable precautions for safety of, and shall provide reasonable protection to prevent damage, injury, or loss to

.1 employees on the Work and other persons who may be affected thereby;

.2 the Work and materials and equipment to be incorporated therein, whether in storage on or off the site, under care, custody, or control of the Contractor, a Subcontractor, or a Sub-subcontractor; and

.3 other property at the site or adjacent thereto, such as trees, shrubs, lawns, walks, pavements, roadways, structures, and utilities not designated for removal, relocation, or replacement in the course of construction.

.4 the Contractor shall be responsible for damage done to buried cables and other utilities by its equipment and shall contact the appropriate offices prior to construction for information depth, etc., of utilities in the area.

§ 10.2.2 The Contractor shall comply with, and give notices required by applicable laws, statutes, ordinances, codes, rules and regulations, and lawful orders of public authorities, bearing on safety of persons or property or their protection from damage, injury, or loss.

§ 10.2.3 The Contractor shall implement, erect, and maintain, as required by existing conditions and performance of the Contract, reasonable safeguards for safety and protection, including posting danger signs and other warnings against hazards; promulgating safety regulations; and notifying the owners and users of adjacent sites and utilities of the safeguards.

§ 10.2.4 When use or storage of explosives or other hazardous materials or equipment, or unusual methods are necessary for execution of the Work, the Contractor shall exercise utmost care and carry on such activities under supervision of properly qualified personnel.

§ 10.2.5 The Contractor shall promptly remedy damage and loss (other than damage or loss insured under property insurance required by the Contract Documents) to property referred to in Sections 10.2.1.2 and 10.2.1.3 caused in whole or in part by the Contractor, a Subcontractor, a Sub-subcontractor, or anyone directly or indirectly employed by any of them, or by anyone for whose acts they may be liable and for which the Contractor is responsible under Sections 10.2.1.2 and 10.2.1.3. The Contractor may make a Claim for the cost to remedy the damage or loss to the extent such damage or loss is attributable to acts or omissions of the Owner or Design Consultant or anyone directly or indirectly employed by either of them, or by anyone for whose acts either of them may be liable, and not attributable to the fault or negligence of the Contractor. The foregoing obligations of the Contractor are in addition to the Contractor's obligations under Section 3.18.

§ 10.2.6 The Contractor shall designate a responsible member of the Contractor's organization at the site whose duty shall be the prevention of accidents. This person shall be the Contractor's superintendent unless otherwise designated by the Contractor in writing to the Owner and Design Consultant.

§ 10.2.7 The Contractor shall not permit any part of the construction or site to be loaded so as to cause damage or create an unsafe condition.

AIA Document A201 – 2017. Copyright © 1911, 1915, 1918, 1925, 1937, 1951, 1958, 1961, 1963, 1966, 1970, 1976, 1987, 1997, 2007 and 2017. All rights reserved. "The American Institute of Architects," "American Institute of Architects," "AIA," the AIA Logo, and "AIA Contract Documents" are trademarks of The American Institute of Architects. This document was produced at 15:45:22 CDT on 05/11/2026 under Subscription No.20240042832 which expires on 07/01/2026, is not for resale, is licensed for one-time use only, and may only be used in accordance with the AIA Contract Documents® Terms of Service. To report copyright violations, e-mail docinfo@aiacontracts.com.
User Notes: (69f1008b5f1b2d23ced2487a)

§ 10.2.8 Injury or Damage to Person or Property
If either party suffers injury or damage to person or property because of an act or omission of the other party, or of others for whose acts such party is legally responsible, notice of the injury or damage, whether or not insured, shall be given to the other party within a reasonable time not exceeding 21 days after discovery. The notice shall provide sufficient detail to enable the other party to investigate the matter.

§ 10.3 Hazardous Materials and Substances
§ 10.3.1 The Contractor is responsible for compliance with any requirements included in the Contract Documents regarding hazardous materials or substances. If the Contractor encounters a hazardous material or substance not addressed in the Contract Documents and if reasonable precautions will be inadequate to prevent foreseeable bodily injury or death to persons resulting from a material or substance, including but not limited to asbestos or polychlorinated biphenyl (PCB), encountered on the site by the Contractor, the Contractor shall, upon recognizing the condition, immediately stop Work in the affected area and notify the Owner and Design Consultant of the condition.

§ 10.3.2 Upon receipt of the Contractor's notice, the Owner shall obtain the services of a licensed laboratory to verify the presence or absence of the material or substance reported by the Contractor and, in the event such material or substance is found to be present, to cause it to be rendered harmless. Unless otherwise required by the Contract Documents, the Owner shall furnish in writing to the Contractor and Design Consultant the names and qualifications of persons or entities who are to perform tests verifying the presence or absence of the material or substance or who are to perform the task of removal or safe containment of the material or substance. The Contractor and the Design Consultant will promptly reply to the Owner in writing stating whether or not either has reasonable objection to the persons or entities proposed by the Owner. If either the Contractor or Design Consultant has an objection to a person or entity proposed by the Owner, the Owner shall propose another to whom the Contractor and the Design Consultant have no reasonable objection. When the material or substance has been rendered harmless, Work in the affected area shall resume upon written agreement of the Owner and Contractor. By Change Order, the Contract Time shall be extended appropriately and the Contract Sum shall be increased by the amount of the Contractor's reasonable additional costs of shutdown, delay, and start-up.

§ 10.3.4 The Owner shall not be responsible under this Section 10.3 for hazardous materials or substances the Contractor brings to the site materials or substances brought to the site by the Contractor regardless of whether such materials or substances were required by the Contract Documents

§ 10.3.5 The Contractor shall reimburse the Owner for the cost and expense the Owner incurs (1) for remediation of hazardous materials or substances the Contractor brings to the site and negligently handles, or (2) where the Contractor fails to perform its obligations under Section 10.3.1, except to the extent that the cost and expense are due to the Owner's fault or negligence.

§ 10.3.6 If, without negligence on the part of the Contractor, the Contractor is held liable by a government agency for the cost of remediation of a hazardous material or substance solely by reason of performing Work as required by the Contract Documents, the Owner shall reimburse the Contractor for all cost and expense thereby incurred.

§ 10.4 Emergencies
In an emergency affecting safety of persons or property, the Contractor shall act, at the Contractor's discretion, to prevent threatened damage, injury, or loss. Additional compensation or extension of time claimed by the Contractor on account of an emergency shall be determined as provided in Article 15 and Article 7.

ARTICLE 11 INSURANCE AND BONDS

§ 11.1 Contractor's Insurance and Bonds
§ 11.1.1 The Contractor shall purchase and maintain insurance of the types and limits of liability, containing the endorsements, and subject to the terms and conditions, as described in the Agreement or elsewhere in the Contract Documents. The Contractor shall purchase and maintain the required insurance from an insurance company or insurance companies lawfully authorized to issue insurance in the jurisdiction where the Project is located. The Owner, Design Consultant, and Design Consultant's consultants shall be named as additional insureds under the Contractor's commercial general liability policy or as otherwise described in the Contract Documents.

AIA Document A201 – 2017. Copyright © 1911, 1915, 1918, 1925, 1937, 1951, 1958, 1961, 1963, 1966, 1970, 1976, 1987, 1997, 2007 and 2017. All rights reserved. "The American Institute of Architects," "American Institute of Architects," "AIA," the AIA Logo, and "AIA Contract Documents" are trademarks of The American Institute of Architects. This document was produced at 15:45:22 CDT on 05/11/2026 under Subscription No.20240042832 which expires on 07/01/2026, is not for resale, is licensed for one-time use only, and may only be used in accordance with the AIA Contract Documents® Terms of Service. To report copyright violations, e-mail docinfo@aiacontracts.com.
User Notes: (69f1008b5f1b2d23ced2487a)

§ 11.1.2 The Contractor shall provide surety bonds of the types, for such penal sums, and subject to such terms and conditions as required by the Contract Documents. The Contractor shall purchase and maintain the required bonds from a company or companies lawfully authorized to issue surety bonds in the jurisdiction where the Project is located.

§ 11.1.3 Upon the request of any person or entity appearing to be a potential beneficiary of bonds covering payment of obligations arising under the Contract, the Contractor shall promptly furnish a copy of the bonds or shall authorize a copy to be furnished.

§ 11.1.4 Notice of Cancellation or Expiration of Contractor's Required Insurance. Within three (3) business days of the date the Contractor becomes aware of an impending or actual cancellation or expiration of any insurance required by the Contract Documents, the Contractor shall provide notice to the Owner of such impending or actual cancellation or expiration. Upon receipt of notice from the Contractor, the Owner shall, unless the lapse in coverage arises from an act or omission of the Owner, have the right to stop the Work until the lapse in coverage has been cured by the procurement of replacement coverage by the Contractor. The furnishing of notice by the Contractor shall not relieve the Contractor of any contractual obligation to provide any required coverage.

ARTICLE 12 UNCOVERING AND CORRECTION OF WORK

§ 12.1 Uncovering of Work

§ 12.1.1 If a portion of the Work is covered contrary to the Design Consultant's request or to requirements specifically expressed in the Contract Documents, it must, if requested in writing by the Design Consultant, be uncovered for the Design Consultant's examination and be replaced at the Contractor's expense without change in the Contract Time.

§ 12.1.2 If a portion of the Work has been covered that the Design Consultant has not specifically requested to examine prior to its being covered, the Design Consultant may request to see such Work and it shall be uncovered by the Contractor. If such Work is in accordance with the Contract Documents, the Contractor shall be entitled to an equitable adjustment to the Contract Sum and Contract Time as may be appropriate. If such Work is not in accordance with the Contract Documents, the costs of uncovering the Work, and the cost of correction, shall be at the Contractor's expense.

§ 12.2 Correction of Work

§ 12.2.1 Before Substantial Completion

The Contractor shall promptly correct Work rejected by the Design Consultant or failing to conform to the requirements of the Contract Documents, discovered before Substantial Completion and whether or not fabricated, installed or completed. Costs of correcting such rejected Work, including additional testing and inspections, the cost of uncovering and replacement, and compensation for the Design Consultant's services and expenses made necessary thereby, shall be at the Contractor's expense.

§ 12.2.2 After Substantial Completion

§ 12.2.2.1 In addition to the Contractor's obligations under Section 3.5, if, within one year after the date of Substantial Completion of the Work or designated portion thereof or after the date for commencement of warranties established under Section 9.9.1, or by terms of any applicable special warranty required by the Contract Documents, any of the Work is found to be not in accordance with the requirements of the Contract Documents, the Contractor shall correct it promptly after receipt of notice from the Owner to do so, unless the Owner has previously given the Contractor a written acceptance of such condition. The Owner shall give such notice promptly after discovery of the condition. During the one-year period for correction of Work, if the Owner fails to notify the Contractor and give the Contractor an opportunity to make the correction, the Owner waives the rights to require correction by the Contractor and to make a claim for breach of warranty. If the Contractor fails to correct nonconforming Work within a reasonable time during that period after receipt of notice from the Owner or Design Consultant, the Owner may

AIA Document A201 – 2017. Copyright © 1911, 1915, 1918, 1925, 1937, 1951, 1958, 1961, 1963, 1966, 1970, 1976, 1987, 1997, 2007 and 2017. All rights reserved. "The American Institute of Architects," "American Institute of Architects," "AIA," the AIA Logo, and "AIA Contract Documents" are trademarks of The American Institute of Architects. This document was produced at 15:45:22 CDT on 05/11/2026 under Subscription No.20240042832 which expires on 07/01/2026, is not for resale, is licensed for one-time use only, and may only be used in accordance with the AIA Contract Documents® Terms of Service. To report copyright violations, e-mail docinfo@aiacontracts.com.
User Notes: (69f1008b5f1b2d23ced2487a)

correct it in accordance with Section 2.5.

§ 12.2.2.2 The one-year period for correction of Work shall be extended with respect to portions of Work first performed after Substantial Completion by the period of time between Substantial Completion and the actual completion of that portion of the Work.

§ 12.2.2.3 The one-year period for correction of Work shall not be extended by corrective Work performed by the Contractor pursuant to this Section 12.2.

§ 12.2.3 The Contractor shall remove from the site portions of the Work that are not in accordance with the requirements of the Contract Documents and are neither corrected by the Contractor nor accepted by the Owner.

§ 12.2.4 The Contractor shall bear the cost of correcting destroyed or damaged construction of the Owner or Separate Contractors, whether completed or partially completed, caused by the Contractor's correction or removal of Work that is not in accordance with the requirements of the Contract Documents.

§ 12.2.5 Nothing contained in this Section 12.2 shall be construed to establish a period of limitation with respect to other obligations the Contractor has under the Contract Documents. Establishment of the one-year period for correction of Work as described in Section 12.2.2 relates only to the specific obligation of the Contractor to correct the Work, and has no relationship to the time within which the obligation to comply with the Contract Documents may be sought to be enforced, nor to the time within which proceedings may be commenced to establish the Contractor's liability with respect to the Contractor's obligations other than specifically to correct the Work.

§ 12.3 Acceptance of Nonconforming Work

If the Owner prefers to accept Work that is not in accordance with the requirements of the Contract Documents, the Owner may do so instead of requiring its removal and correction, in which case the Contract Sum will be reduced as appropriate and equitable. Such adjustment shall be effected whether or not final payment has been made.

ARTICLE 13 MISCELLANEOUS PROVISIONS

§ 13.1 Governing Law

The Contract shall be governed by the law of the State of Alabama and Jurisdiction shall be in Mobile County or Southern District of Alabama.

§ 13.2 Successors and Assigns

§ 13.2.1 The Owner and Contractor respectively bind themselves, their partners, successors, assigns, and legal representatives to covenants, agreements, and obligations contained in the Contract Documents. Except as provided in Section 13.2.2, neither party to the Contract shall assign the Contract as a whole without written consent of the other. If either party attempts to make an assignment without such consent, that party shall nevertheless remain legally responsible for all obligations under the Contract.

§ 13.2.2 The Owner may, without consent of the Contractor, assign the Contract to a lender providing construction financing for the Project, if the lender assumes the Owner's rights and obligations under the Contract Documents. The Contractor shall execute all consents reasonably required to facilitate the assignment.
§13.2.3 No assignment of the Contract shall be made without the written permission of Surety providing bonding and the City of Mobile.

§ 13.3 Rights and Remedies

§ 13.3.1 Duties and obligations imposed by the Contract Documents and rights and remedies available thereunder shall be in addition to and not a limitation of duties, obligations, rights, and remedies otherwise imposed or available by law.

§ 13.3.2 No action or failure to act by the Owner, Design Consultant, or Contractor shall constitute a waiver of a right or duty afforded them under the Contract, nor shall such action or failure to act constitute approval of or acquiescence in a breach thereunder, except as may be specifically agreed upon in writing.

AIA Document A201 – 2017. Copyright © 1911, 1915, 1918, 1925, 1937, 1951, 1958, 1961, 1963, 1966, 1970, 1976, 1987, 1997, 2007 and 2017. All rights reserved. "The American Institute of Architects," "American Institute of Architects," "AIA," the AIA Logo, and "AIA Contract Documents" are trademarks of The American Institute of Architects. This document was produced at 15:45:22 CDT on 05/11/2026 under Subscription No.20240042832 which expires on 07/01/2026, is not for resale, is licensed for one-time use only, and may only be used in accordance with the AIA Contract Documents® Terms of Service. To report copyright violations, e-mail docinfo@aiacontracts.com.
User Notes: (69f1008b5f1b2d23ced2487a)

§ 13.4 Tests and Inspections

§ 13.4.1 Tests, inspections, and approvals of portions of the Work shall be made as required by the Contract Documents and by applicable laws, statutes, ordinances, codes, rules, and regulations or lawful orders of public authorities. Unless otherwise provided, the Contractor shall make arrangements for such tests, inspections, and approvals with an independent testing laboratory or entity acceptable to the Owner, or with the appropriate public authority, and shall bear all related costs of tests, inspections, and approvals. The Contractor shall give the Design Consultant timely notice of when and where tests and inspections are to be made so that the Design Consultant may be present for such procedures. The Owner shall bear costs of tests, inspections, or approvals that do not become requirements until after bids are received or negotiations concluded. The Owner shall directly arrange and pay for tests, inspections, or approvals where building codes or applicable laws or regulations so require.

§ 13.4.2 If the Design Consultant, Owner, or public authorities having jurisdiction determine that portions of the Work require additional testing, inspection, or approval not included under Section 13.4.1, the Design Consultant will, upon written authorization from the Owner, instruct the Contractor to make arrangements for such additional testing, inspection, or approval, by an entity acceptable to the Owner, and the Contractor shall give timely notice to the Design Consultant of when and where tests and inspections are to be made so that the Design Consultant may be present for such procedures. Such costs, except as provided in Section 13.4.3, shall be at the Owner's expense.

§ 13.4.3 If procedures for testing, inspection, or approval under Sections 13.4.1 and 13.4.2 reveal failure of the portions of the Work to comply with requirements established by the Contract Documents, all costs made necessary by such failure, including those of repeated procedures and compensation for the Design Consultant's services and expenses, shall be at the Contractor's expense.

§ 13.4.4 Required certificates of testing, inspection, or approval shall, unless otherwise required by the Contract Documents, be secured by the Contractor and promptly delivered to the Design Consultant.

§ 13.4.5 If the Design Consultant is to observe tests, inspections, or approvals required by the Contract Documents, the Design Consultant will do so promptly and, where practicable, at the normal place of testing.

§ 13.4.6 Tests or inspections conducted pursuant to the Contract Documents shall be made promptly to avoid unreasonable delay in the Work.

§ 13.4.7 Test, inspections or approvals made in addition to the Design Consultant's normal design and contract administration services caused by the Contractor shall be paid for by the Contractor. The normal service schedule is contained in Article 2.8.1 of AIA B102-2017 as amended by the Owner and is available to Contractor on request.
§ 13.4.8 The Contractor must call BUILD MOBILE for inspections and approval at the times required by the Ciyt requirements, as well as notify the Design Consultant, Consulting Engineer, and/or Test Laboratory, for inspection and approval of sub-grade conditions, under slab and footing conditions, vapor barrier placement, reinforcing steel placement, all structural connections, electrical, mechanical, etc. None of the above will be accepted that have been covered up before receiving approval of the Design Consultant or his Consultant.

ARTICLE 14 TERMINATION OR SUSPENSION OF THE CONTRACT

§ 14.1 Termination by the Contractor

§ 14.1.1 The Contractor may terminate the Contract if the Work is stopped for a period of 30 consecutive days through no act or fault of the Contractor, a Subcontractor, a Sub-subcontractor, their agents or employees, or any other persons or entities performing portions of the Work, for any of the following reasons:

.1 Issuance of an order of a court or other public authority having jurisdiction that requires all Work to be stopped;

.2 An act of government, such as a declaration of national emergency, that requires all Work to be stopped;

.3 Because the Design Consultant has not issued a Certificate for Payment and has not notified the Contractor of the reason for withholding certification as provided in Section 9.4.1, or because the Owner has not made payment on a Certificate for Payment within the time stated in the Contract Documents; or

.4 The Owner has failed to furnish to the Contractor reasonable evidence as required by Section 2.2.

AIA Document A201 – 2017. Copyright © 1911, 1915, 1918, 1925, 1937, 1951, 1958, 1961, 1963, 1966, 1970, 1976, 1987, 1997, 2007 and 2017. All rights reserved. "The American Institute of Architects," "American Institute of Architects," "AIA," the AIA Logo, and "AIA Contract Documents" are trademarks of The American Institute of Architects. This document was produced at 15:45:22 CDT on 05/11/2026 under Subscription No.20240042832 which expires on 07/01/2026, is not for resale, is licensed for one-time use only, and may only be used in accordance with the AIA Contract Documents® Terms of Service. To report copyright violations, e-mail docinfo@aiacontracts.com.
User Notes: (69f1008b5f1b2d23ced2487a)

§ 14.1.2 The Contractor may terminate the Contract if, through no act or fault of the Contractor, a Subcontractor, a Sub-subcontractor, their agents or employees, or any other persons or entities performing portions of the Work, repeated suspensions, delays, or interruptions of the entire Work by the Owner as described in Section 14.3, constitute in the aggregate more than 100 percent of the total number of days scheduled for completion, or 120 days in any 365-day period, whichever is less.

§ 14.1.3 If one of the reasons described in Section 14.1.1 or 14.1.2 exists, the Contractor may, upon seven days' notice to the Owner and Design Consultant, terminate the Contract and recover from the Owner payment for Work executed, as well as reasonable overhead and profit on Work not executed, and costs incurred by reason of such termination.

§ 14.1.4 If the Work is stopped for a period of 60 consecutive days through no act or fault of the Contractor, a Subcontractor, a Sub-subcontractor, or their agents or employees or any other persons or entities performing portions of the Work because the Owner has repeatedly failed to fulfill the Owner's obligations under the Contract Documents with respect to matters important to the progress of the Work, the Contractor may, upon seven additional days' notice to the Owner and the Design Consultant, terminate the Contract and recover from the Owner as provided in Section 14.1.3.

§ 14.2 Termination by the Owner for Cause

§ 14.2.1 The Owner may terminate the Contract if the Contractor

.1 repeatedly refuses or fails to supply enough properly skilled workers or proper materials;

.2 fails to make payment to Subcontractors or suppliers in accordance with the respective agreements between the Contractor and the Subcontractors or suppliers;

.3 repeatedly disregards applicable laws, statutes, ordinances, codes, rules and regulations, or lawful orders of a public authority; or

.4 otherwise is guilty of substantial breach of a provision of the Contract Documents.

§ 14.2.2 When any of the reasons described in Section 14.2.1 exist, and upon certification by the Design Consultant that sufficient cause exists to justify such action, the Owner may, without prejudice to any other rights or remedies of the Owner and after giving the Contractor and the Contractor's surety, if any, seven days' notice, terminate employment of the Contractor and may, subject to any prior rights of the surety:

.1 Exclude the Contractor from the site and take possession of all materials, equipment, tools, and construction equipment and machinery thereon owned by the Contractor;

.2 Accept assignment of subcontracts pursuant to Section 5.4; and

.3 Finish the Work by whatever reasonable method the Owner may deem expedient. Upon written request of the Contractor, the Owner shall furnish to the Contractor a detailed accounting of the costs incurred by the Owner in finishing the Work.

§ 14.2.3 When the Owner terminates the Contract for one of the reasons stated in Section 14.2.1, the Contractor shall not be entitled to receive further payment until the Work is finished.

§ 14.2.4 If the unpaid balance of the Contract Sum exceeds costs of finishing the Work, including compensation for the Design Consultant's services and expenses made necessary thereby, and other damages incurred by the Owner and not expressly waived, such excess shall be paid to the Contractor. If such costs and damages exceed the unpaid balance, the Contractor shall pay the difference to the Owner. The amount to be paid to the Contractor or Owner, as the case may be, shall be certified by the Initial Decision Maker, upon application, and this obligation for payment shall survive termination of the Contract.

§ 14.3 Suspension by the Owner for Convenience

§ 14.3.1 The Owner may, without cause, order the Contractor in writing to suspend, delay or interrupt the Work, in whole or in part for such period of time as the Owner may determine.

§ 14.3.2 The Contract Sum and Contract Time shall be adjusted for increases in the cost and time caused by suspension, delay, or interruption under Section 14.3.1. Adjustment of the Contract Sum shall include profit. No adjustment shall be made to the extent

AIA Document A201 – 2017. Copyright © 1911, 1915, 1918, 1925, 1937, 1951, 1958, 1961, 1963, 1966, 1970, 1976, 1987, 1997, 2007 and 2017. All rights reserved. "The American Institute of Architects," "American Institute of Architects," "AIA," the AIA Logo, and "AIA Contract Documents" are trademarks of The American Institute of Architects. This document was produced at 15:45:22 CDT on 05/11/2026 under Subscription No.20240042832 which expires on 07/01/2026, is not for resale, is licensed for one-time use only, and may only be used in accordance with the AIA Contract Documents® Terms of Service. To report copyright violations, e-mail docinfo@aiacontracts.com.
User Notes: (69f1008b5f1b2d23ced2487a)

.1 that performance is, was, or would have been, so suspended, delayed, or interrupted, by another cause for which the Contractor is responsible; or

.2 that an equitable adjustment is made or denied under another provision of the Contract.

§ 14.4 Termination by the Owner for Convenience

§ 14.4.1 The Owner may, at any time, terminate the Contract for the Owner's convenience and without cause.

§ 14.4.2 Upon receipt of notice from the Owner of such termination for the Owner's convenience, the Contractor shall

.1 cease operations as directed by the Owner in the notice;

.2 take actions necessary, or that the Owner may direct, for the protection and preservation of the Work; and

.3 except for Work directed to be performed prior to the effective date of termination stated in the notice, terminate all existing subcontracts and purchase orders and enter into no further subcontracts and purchase orders.

§ 14.4.3 In case of such termination for the Owner's convenience, the Owner shall pay the Contractor for Work properly executed; costs incurred by reason of the termination, including costs attributable to termination of Subcontracts; and the termination fee, if any, set forth in the Agreement.

ARTICLE 15 CLAIMS AND DISPUTES

§ 15.1 Claims

§ 15.1.1 Definition

A Claim is a demand or assertion by one of the parties seeking, as a matter of right, payment of money, a change in the Contract Time, or other relief with respect to the terms of the Contract. The term "Claim" also includes other disputes and matters in question between the Owner and Contractor arising out of or relating to the Contract. The responsibility to substantiate Claims shall rest with the party making the Claim. This Section 15.1.1 does not require the Owner to file a Claim in order to impose liquidated damages in accordance with the Contract Documents.

§ 15.1.2 Time Limits on Claims

Shall be governed by applicable Alabama State Law.

§ 15.1.3 Notice of Claims

§ 15.1.3.1 Claims by either the Owner or Contractor, where the condition giving rise to the Claim is first discovered prior to expiration of the period for correction of the Work set forth in Section 12.2.2, shall be initiated by notice to the other party and to the Initial Decision Maker with a copy sent to the Design Consultant, if the Design Consultant is not serving as the Initial Decision Maker. Claims by either party under this Section 15.1.3.1 shall be initiated within 21 days after occurrence of the event giving rise to such Claim or within 21 days after the claimant first recognizes the condition giving rise to the Claim, whichever is later. Claims must be initiated by written notice to the Design Consultant and the other party.

§ 15.1.3.2 Claims by either the Owner or Contractor, where the condition giving rise to the Claim is first discovered after expiration of the period for correction of the Work set forth in Section 12.2.2, shall be initiated by notice to the other party. In such event, no decision by the Initial Decision Maker is required.

§ 15.1.4 Continuing Contract Performance

§ 15.1.4.1 Pending final resolution of a Claim, except as otherwise agreed in writing or as provided in Section 9.7 and Article 14, the Contractor shall proceed diligently with performance of the Contract and the Owner shall continue to make payments in accordance with the Contract Documents.

§ 15.1.4.2 The Contract Sum and Contract Time shall be adjusted in accordance with the Initial Decision Maker's decision, subject to the right of either party to proceed in accordance with this Article 15. The Design Consultant will issue Certificates for Payment in accordance with the decision of the Initial Decision Maker.

§ 15.1.5 Claims for Additional Cost

If the Contractor wishes to make a Claim for an increase in the Contract Sum, notice as provided in Section 15.1.3 shall be given before proceeding to execute the portion of the Work that is the subject of the Claim. Prior notice is

AIA Document A201 – 2017. Copyright © 1911, 1915, 1918, 1925, 1937, 1951, 1958, 1961, 1963, 1966, 1970, 1976, 1987, 1997, 2007 and 2017. All rights reserved. "The American Institute of Architects," "American Institute of Architects," "AIA," the AIA Logo, and "AIA Contract Documents" are trademarks of The American Institute of Architects. This document was produced at 15:45:22 CDT on 05/11/2026 under Subscription No.20240042832 which expires on 07/01/2026, is not for resale, is licensed for one-time use only, and may only be used in accordance with the AIA Contract Documents® Terms of Service. To report copyright violations, e-mail docinfo@aiacontracts.com.
User Notes: (69f1008b5f1b2d23ced2487a)

not required for Claims relating to an emergency endangering life or property arising under Section 10.4.

§ 15.1.6 Claims for Additional Time

§ 15.1.6.1 If the Contractor wishes to make a Claim for an increase in the Contract Time, notice as provided in Section 15.1.3 shall be given. The Contractor's Claim shall include an estimate of cost and of probable effect of delay on progress of the Work. In the case of a continuing delay, only one Claim is necessary.

§ 15.1.6.2 If adverse weather conditions are the basis for a Claim for additional time, such Claim shall be documented by data substantiating that weather conditions were abnormal for the period of time, could not have been reasonably anticipated, and had an adverse effect on the scheduled construction.

§ 15.1.7 Waiver of Claims for Consequential Damages

The Contractor and Owner waive Claims against each other for consequential damages arising out of or relating to this Contract. This mutual waiver includes

.1 damages incurred by the Owner for rental expenses, for losses of use, income, profit, financing, business and reputation, and for loss of management or employee productivity or of the services of such persons; and

.2 damages incurred by the Contractor for principal office expenses including the compensation of personnel stationed there, for losses of financing, business and reputation, and for loss of profit, except anticipated profit arising directly from the Work.

This mutual waiver is applicable, without limitation, to all consequential damages due to either party's termination in accordance with Article 14. Nothing contained in this Section 15.1.7 shall be deemed to preclude assessment of liquidated damages, when applicable, in accordance with the requirements of the Contract Documents.

§ 15.2 Initial Decision

§ 15.2.1 Claims, excluding those where the condition giving rise to the Claim is first discovered after expiration of the period for correction of the Work set forth in Section 12.2.2 or arising under Sections 10.3, 10.4, and 11.5, shall be referred to the Initial Decision Maker for initial decision. The Design Consultant will serve as the Initial Decision Maker, unless otherwise indicated in the Agreement. Except for those Claims excluded by this Section 15.2.1, an initial decision shall be required as a condition precedent to mediation of any Claim. If an initial decision has not been rendered within 30 days after the Claim has been referred to the Initial Decision Maker, the party asserting the Claim may demand mediation and binding dispute resolution without a decision having been rendered. Unless the Initial Decision Maker and all affected parties agree, the Initial Decision Maker will not decide disputes between the Contractor and persons or entities other than the Owner.

§ 15.2.2 The Initial Decision Maker will review Claims and within ten days of the receipt of a Claim take one or more of the following actions: (1) request additional supporting data from the claimant or a response with supporting data from the other party, (2) reject the Claim in whole or in part, (3) approve the Claim, (4) suggest a compromise, or (5) advise the parties that the Initial Decision Maker is unable to resolve the Claim if the Initial Decision Maker lacks sufficient information to evaluate the merits of the Claim or if the Initial Decision Maker concludes that, in the Initial Decision Maker's sole discretion, it would be inappropriate for the Initial Decision Maker to resolve the Claim.

§ 15.2.3 In evaluating Claims, the Initial Decision Maker may, but shall not be obligated to, consult with or seek information from either party or from persons with special knowledge or expertise who may assist the Initial Decision Maker in rendering a decision. The Initial Decision Maker may request the Owner to authorize retention of such persons at the Owner's expense.

§ 15.2.4 If the Initial Decision Maker requests a party to provide a response to a Claim or to furnish additional supporting data, such party shall respond, within ten days after receipt of the request, and shall either (1) provide a response on the requested supporting data, (2) advise the Initial Decision Maker when the response or supporting data will be furnished, or (3) advise the Initial Decision Maker that no supporting data will be furnished. Upon receipt of the response or supporting data, if any, the Initial Decision Maker will either reject or approve the Claim in whole or in part.

§ 15.2.5 The Initial Decision Maker will render an initial decision approving or rejecting the Claim, or indicating that the Initial Decision Maker is unable to resolve the Claim. This initial decision shall (1) be in writing; (2) state the

AIA Document A201 – 2017. Copyright © 1911, 1915, 1918, 1925, 1937, 1951, 1958, 1961, 1963, 1966, 1970, 1976, 1987, 1997, 2007 and 2017. All rights reserved. "The American Institute of Architects," "American Institute of Architects," "AIA," the AIA Logo, and "AIA Contract Documents" are trademarks of The American Institute of Architects. This document was produced at 15:45:22 CDT on 05/11/2026 under Subscription No.20240042832 which expires on 07/01/2026, is not for resale, is licensed for one-time use only, and may only be used in accordance with the AIA Contract Documents® Terms of Service. To report copyright violations, e-mail docinfo@aiacontracts.com.
User Notes: (69f1008b5f1b2d23ced2487a)

reasons therefor; and (3) notify the parties and the Design Consultant, if the Design Consultant is not serving as the Initial Decision Maker, of any change in the Contract Sum or Contract Time or both. The initial decision shall be final and binding on the parties but subject to mediation and, if the parties fail to resolve their dispute through mediation, to binding dispute resolution.

§ 15.2.7 In the event of a Claim against the Contractor, the Owner may, but is not obligated to, notify the surety, if any, of the nature and amount of the Claim. If the Claim relates to a possibility of a Contractor's default, the Owner may, but is not obligated to, notify the surety and request the surety's assistance in resolving the controversy.

§ 15.2.8 If a Claim relates to or is the subject of a mechanic's lien, the party asserting such Claim may proceed in accordance with applicable law to comply with the lien notice or filing deadlines.

§ 15.3 Mediation

§ 15.3.1 Claims, disputes, or other matters in controversy arising out of or related to the Contract, except those waived as provided for in Sections 9.10.4, 9.10.5, and 15.1.7, shall not be subject to mediation or arbitration as a condition precedent to binding dispute resolution.

AIA Document A201 – 2017. Copyright © 1911, 1915, 1918, 1925, 1937, 1951, 1958, 1961, 1963, 1966, 1970, 1976, 1987, 1997, 2007 and 2017. All rights reserved. "The American Institute of Architects," "American Institute of Architects," "AIA," the AIA Logo, and "AIA Contract Documents" are trademarks of The American Institute of Architects. This document was produced at 15:45:22 CDT on 05/11/2026 under Subscription No.20240042832 which expires on 07/01/2026, is not for resale, is licensed for one-time use only, and may only be used in accordance with the AIA Contract Documents® Terms of Service. To report copyright violations, e-mail docinfo@aiacontracts.com.
User Notes:
(69f1008b5f1b2d23ced2487a)

EXHIBIT "A"

City of Mobile

Office of Supplier Diversity

Request of Waiver of DBE Goal

The City of Mobile establishes an overall goal of 15% utilization of socially and economically disadvantaged businesses for all public spending or private projects that utilize public funding and/or incentives.

Use this form to request a waiver of DBE goals on a City of Mobile Bid, RFP, solicitation or contract. You can download a PDF fill-in version of this form at https://cityofmobile.sharepoint.com/sites/COMPortal .
Contact the Office of Supplier Diversity at 251-208-7967 if you require assistance with completing this or any other DBE form.

This form should be completed by the City department requesting a waiver. Upon completion, submit the form to the Office of Supplier Diversity by email at officeofsupplierdiversity@cityofmobile.org.

City of Mobile
Office of Supplier Diversity

REQUEST FOR WAIVER OF DISADVANTAGED BUSINESS ENTERPRISE (DBE) GOAL

Bid/RFP/P.O./Solicitation/Other# PR-068-24 Current Date 6 /8 /26

Project Description Trimmier Park football field lighting and scoreboard replacement

By City of Mobile Department/ Division/ Office/Unattached Board

I hereby request that the DBE participation goal, pursuant to Ordinance of the City Charter and Policy, be waived on the above-referenced project for the following reason(s):
Please attached any supporting documentation.

Contractor will prove single trade services and will not be using any sub-contractors.

Carleen Stout
Requested By (Department Director)

C. Stout (Jun 8, 2026 10:21:57 CDT)
(Signature)

Director, Real Estate Asset Mgt
(Title)

(Date)

251-208-7492
Telephone Number

carleen.stout@cityofmobile.gov
Email Address

Archnique Kidd
Reviewed By (Office of Supplier Diversity)

Archnique Kidd
(Signature)

Small Bus. Dev. MGR
(Title)

06/10/2026
(Date)

Approved By (CAO)

OFFICE OF SMALL BUSINESS DEVELOPMENT

CITY OF MOBILE

Subcontracting and Major Supplier Plan

Contact Office of Small Business Development for questions on completing this form.
Via email:Archnique.kidd@cityofmobile.org
251.208.7967

Bidders and Proposers – Please complete and submit these forms as required by your City of Mobile Bid or Proposal Specification.

If you are submitting a proposal in response to a Request for Qualifications, Request for Proposal, or other solicitation ("Solicitations") issued by the City of Mobile, the bid specification may require you to utilize disadvantaged business enterprise ("DBE") subcontractors and suppliers. If SBE participation is required, you must complete and submit these forms with your proposal. If required, failure to submit this form will render your bid non-responsive. NOTE: To satisfy participation requirements for a federally funded project, you must utilize SBEs certified through the Alabama Unified Certification Program.

If SBE participation is required, and you fail to satisfy the participation requirement, you must show that you made a good faith effort to include such participation; you will be required to submit DBE Compliance Form 2 and include additional information if needed. When so required, failure to address adequately the good faith effort factors on Form 2 will render your bid or proposal non-responsive. The "good faith effort" factors on Form 2 are not intended to be a mandatory, exhaustive, or exclusive.

You are encouraged to work with the City of Mobile Small Business Development Manager when preparing this form. Please consult with the City Small Business Development Manager for a list of eligible SBEs. The "good faith effort" factors on **Form 2** are not intended to be mandatory, exhaustive, or exclusive; they are a tool to help you, and the City of Mobile, determine whether you made efforts which, by their scope, intensity, and appropriateness to the objective, would reasonably be expected to fulfill the participation requirement.

About **"DBEs"**: Disadvantaged business enterprise or DBE means a for-profit small business concern (1) That is at least 51 percent owned by one or more individuals who are both socially and economically disadvantaged or, in the case of a corporation, in which 51 percent of the stock is owned by one or more such individuals; and (2) whose management and daily business operations are controlled by one or more of the socially and economically disadvantaged individuals who own it.

About **"Good Faith" Effort**: Good faith efforts mean efforts to achieve a DBE goal or other requirement of this part which, by their scope, intensity, and appropriateness to the objective, can reasonably be expected to fulfill the program requirement. The City of Mobile expects contractors holding large contracts to recruit and engage DBEs to be a part of their team.

Failure to submit this form, when so required by the bid or proposal specification, will render your bid non-responsive.

OFFICE OF SMALL BUSINESS DEVELOPMENT

CITY OF MOBILE

Subcontracting and Major Supplier Plan

Contact Office of Small Business Development for questions on completing this form.
Via email:Archnique.kidd@cityofmobile.org
251.208.7967

FORM 1: Background and Plan

Section I. Information about your company

Company	Bill Smith Electric, Inc.
Address	PO Box 1057 Gonzalez, FL 32560
Telephone	850-968-6500
E-Mail	jake@billsmithelectric.com

RFP/RFQ Solicitation Number	PR-068-24
Project Description	Trimmier Park - Football Stadium Lighting
Is your company a DBE company?	Yes ☐ No ☑
Work force demographics	Male 27 Female 4 Minority 2 Non-minority 29 SDVO _____ Total number of Employees 31

Subcontractor/Major Supplier Plan submitted by:

Printed Name: Jacob W. Smith

Signature: _____ Date: 6/3/2026

Title: President

The following employee will be designated as the **DBE Liaison** for all communication regarding DBE participation including documentation for DBE participation and maintenance of records of Good Faith Efforts for this contract award:

Name: Jacob W. Smith Title: President

Email: jake@billsmithelectric.com Phone: 850-968-6500

OFFICE OF SMALL BUSINESS DEVELOPMENT

CITY OF MOBILE

Subcontracting and Major Supplier Plan

Contact Office of Small Business Development for questions on completing this form.
Via email:Archnique.kidd@cityofmobile.org
251.208.7967

FORM 1: Background and Plan (Cont'd

Section II. Subcontractors/Major Vendors Supplier Plan submitted by:

Please Print Company Bill Smith Electric, Inc. Your Bid/Proposal Amount $ 304,100 Date: 6/3/2026

Description PR-068-24 Name of Bidder/Proposer: Jacob W. Smith

Trimmier Park - Football Stadium Lighting

I intend to use the following subcontractors: (Attach additional pages if necessary)

Subcontractor or Major Supplier	Phone	Scope(s) of Work to be performed by the DBE, SDVOB	$$ Value of Proposed Contract with DBE	% of TOTAL Contract	DBE?	Official Verification Only
Bill Smith Electric, Inc. is performing all work in-house using no subcontractors.						

OFFICE OF SMALL BUSINESS DEVELOPMENT

CITY OF MOBILE

Subcontracting and Major Supplier Plan

Form 2: Good Faith Effort Documentation

Name of Bidder: Bill Smith Electric, Inc.

Contact Person: Jacob W. Smith Phone: 850-968-6500 Email: jake@billsmithelectric.com

Please complete this form if you are unable to identify DBE subcontractors or suppliers to reach 15% of the value of your bid.

YES (□)	NO (□)	Did you do these suggested areas for DBE recruitment and engagement
✓		**PRE-BID MEETING(S):** The bidder attended all pre-bid meetings scheduled by the City to inform DBEs of contracting and subcontracting opportunities.
	✓	**DBE/ALDOT DBE LIST(S):** The bidder utilized the Office of Small Business Development list or lists of certified through the Alabama Department of Transportation UCP DBE Listing
	✓	**SMALL CONTRACT(S):** The bidder selected specific portions of the work to be performed by DBEs in order to increase the likelihood of meeting the DBE goals (including breaking down contracts into smaller units to facilitate DBE participation). Consider support services, including insurance, accounting, temporary labor, and transportation, landscaping, and janitorial as potential areas for DBE use.
	✓	**FOLLOW-UP:** The bidder followed-up initial indications of interest by DBEs by contacting those DBEs to determine with certainty if they remained interested in bidding.
	✓	**GOOD FAITH NEGOTIATIONS:** The bidder negotiated in good faith with interested DBEs and did not reject DBEs as unqualified without sound business reasons based on a thorough investigation of their capabilities. Bidders are not expected to engage unqualified subcontractors or subcontractors whose pricing, after negotiation, remains excessive or unreasonable. (Please document qualification deficiencies or unreasonable pricing if it prevented your engagement of specific DBE subcontractors.)
	✓	**ADVERTISEMENT:** The bidder advertised in general circulation and/or trade association publications concerning subcontracting opportunities and allowed DBEs reasonable time to respond.
	✓	**INTERNET ADVERTISING:** The bidder advertised DBE and/or subcontracting opportunities in the newspaper or other internet portals that are accessible to DBEs and/or potential subcontractors.

OFFICE OF SMALL BUSINESS DEVELOPMENT

CITY OF MOBILE

Subcontracting and Major Supplier Plan

	✓	**INFORMATION:** The bidder provided interested DBEs with adequate information about the plans, specifications and requirements of the subcontract.
	✓	**WRITTEN NOTICE(S):** The bidder/proposer took the necessary steps to provide written notice in a manner reasonably calculated to inform DBEs of subcontracting opportunities and allowed sufficient time for them to participate effectively.
	✓	**COMMUNITY RESOURCES:** The bidder/proposer used the services of available community organizations, small and/or disadvantaged business assistance offices and other organizations that provided assistance in the recruitment and placement of DBE firms.

CONTRACT RECORDS:

The bidder/proposer has maintained the following records for each DBE that has bid on the subcontracting opportunity:

1. Name, address, email address and telephone number
2. A description of information provided by the bidder/proposer or subcontractor; and
3. A statement of whether an agreement was reached, and if not, why not, including any reasons for concluding that the DBE was unqualified to perform the job.

Section 2(B)

_✓_ There are not ways to break out 15% of the value of this contract for subcontractors / suppliers. Provide further details as to why and attach the document to this form if there is an inability to break out 15% of the value of the contract was the reason, or a reason, you could not meet the participation requirements.

_____ Could not find sufficient DBEs to provide subcontracting or supplier services.

_____ DBEs were available but did not have sufficient qualifications or experience to meet the needs of this contract.

Please indicate additional efforts you have taken to recruit and engage DBEs. _____

Bill Smith Electric, Inc. is performing all work in-house using no subcontractors.

Section 2(B): Qualified electrician is required for this project.

PD-068-24 Waiver of DBE FORM

Final Audit Report 2026-06-10

Created:	2026-06-08
By:	Rhonda Lewis (rhonda.lewis@cityofmobile.gov)
Status:	Signed
Transaction ID:	CBJCHBCAABAAYNNSfYmNUrFtso05sFT6CpfiyaXa6ZV

"PD-068-24 Waiver of DBE FORM" History

Document created by Rhonda Lewis (rhonda.lewis@cityofmobile.gov)
2026-06-08 - 2:45:59 PM GMT- IP address: 76.8.254.3

Document emailed to carleen.stout@cityofmobile.gov for signature
2026-06-08 - 2:49:51 PM GMT

Email viewed by carleen.stout@cityofmobile.gov
2026-06-08 - 3:21:35 PM GMT- IP address: 104.47.65.254

Signer carleen.stout@cityofmobile.gov entered name at signing as C. Stout
2026-06-08 - 3:21:55 PM GMT- IP address: 76.8.254.3

Document e-signed by C. Stout (carleen.stout@cityofmobile.gov)
Signature Date: 2026-06-08 - 3:21:57 PM GMT - Time Source: server- IP address: 76.8.254.3 - Signature Appearance Selected: TYPE

Document emailed to Archnique Kidd (archnique.kidd@cityofmobile.gov) for signature
2026-06-08 - 3:22:00 PM GMT

Email viewed by Archnique Kidd (archnique.kidd@cityofmobile.gov)
2026-06-08 - 3:28:01 PM GMT- IP address: 76.8.254.3

Email viewed by Archnique Kidd (archnique.kidd@cityofmobile.gov)
2026-06-10 - 5:03:46 PM GMT- IP address: 76.8.254.3

Document e-signed by Archnique Kidd (archnique.kidd@cityofmobile.gov)
Signature Date: 2026-06-10 - 5:05:21 PM GMT - Time Source: server- IP address: 76.8.254.3 - Signature Appearance Selected: IMAGE

Agreement completed.
2026-06-10 - 5:05:21 PM GMT

MOBILE ALABAMA | Powered by Adobe Acrobat Sign

EXHIBIT "B"

CERTIFICATE OF LIABILITY INSURANCE

DATE (MM/DD/YYYY): 6/24/2026

THIS CERTIFICATE IS ISSUED AS A MATTER OF INFORMATION ONLY AND CONFERS NO RIGHTS UPON THE CERTIFICATE HOLDER. THIS CERTIFICATE DOES NOT AFFIRMATIVELY OR NEGATIVELY AMEND, EXTEND OR ALTER THE COVERAGE AFFORDED BY THE POLICIES BELOW. THIS CERTIFICATE OF INSURANCE DOES NOT CONSTITUTE A CONTRACT BETWEEN THE ISSUING INSURER(S), AUTHORIZED REPRESENTATIVE OR PRODUCER, AND THE CERTIFICATE HOLDER.

IMPORTANT: If the certificate holder is an ADDITIONAL INSURED, the policy(ies) must have ADDITIONAL INSURED provisions or be endorsed. If SUBROGATION IS WAIVED, subject to the terms and conditions of the policy, certain policies may require an endorsement. A statement on this certificate does not confer rights to the certificate holder in lieu of such endorsement(s).

PRODUCER Acentria Insurance - Pensacola 10427 Sorrento Rd, Ste 305 Pensacola FL 32507 License#: L100460	**CONTACT NAME:** Melissa Harris **PHONE (A/C, No, Ext):** 850-453-6512 **FAX (A/C, No):** 850-453-6512 **E-MAIL ADDRESS:** Melissa.Harris@Acentria.com
INSURED Bill Smith Electric, Inc P.O. Box 1057 Gonzalez FL 32560 BILLSMI-02	**INSURER(S) AFFORDING COVERAGE** / **NAIC #** **INSURER A :** FCCI Insurance Company — 10178 **INSURER B :** Evanston Insurance Company — 35378 **INSURER C :** **INSURER D :** **INSURER E :** **INSURER F :**

COVERAGES **CERTIFICATE NUMBER:** 500922890 **REVISION NUMBER:**

THIS IS TO CERTIFY THAT THE POLICIES OF INSURANCE LISTED BELOW HAVE BEEN ISSUED TO THE INSURED NAMED ABOVE FOR THE POLICY PERIOD INDICATED. NOTWITHSTANDING ANY REQUIREMENT, TERM OR CONDITION OF ANY CONTRACT OR OTHER DOCUMENT WITH RESPECT TO WHICH THIS CERTIFICATE MAY BE ISSUED OR MAY PERTAIN, THE INSURANCE AFFORDED BY THE POLICIES DESCRIBED HEREIN IS SUBJECT TO ALL THE TERMS, EXCLUSIONS AND CONDITIONS OF SUCH POLICIES. LIMITS SHOWN MAY HAVE BEEN REDUCED BY PAID CLAIMS.

INSR LTR	TYPE OF INSURANCE	ADDL INSD	SUBR WVD	POLICY NUMBER	POLICY EFF (MM/DD/YYYY)	POLICY EXP (MM/DD/YYYY)	LIMITS	
A	X **COMMERCIAL GENERAL LIABILITY** CLAIMS-MADE [X] OCCUR X Contractual Lia. GEN'L AGGREGATE LIMIT APPLIES PER: POLICY [X] PRO-JECT [ ] LOC OTHER:	Y	Y	GL10008624702	7/24/2025	7/24/2026	EACH OCCURRENCE DAMAGE TO RENTED PREMISES (Ea occurrence) MED EXP (Any one person) PERSONAL & ADV INJURY GENERAL AGGREGATE PRODUCTS - COMP/OP AGG	$ 1,000,000 $ 100,000 $ 5,000 $ 1,000,000 $ 2,000,000 $ 2,000,000
A	**AUTOMOBILE LIABILITY** X ANY AUTO OWNED AUTOS ONLY X HIRED AUTOS ONLY SCHEDULED AUTOS X NON-OWNED AUTOS ONLY	Y	Y	CA10008624602	7/24/2025	7/24/2026	COMBINED SINGLE LIMIT (Ea accident) BODILY INJURY (Per person) BODILY INJURY (Per accident) PROPERTY DAMAGE (Per accident) PIP	$ 1,000,000 $ $ $ $ 10,000
A	X **UMBRELLA LIAB** X OCCUR **EXCESS LIAB** CLAIMS-MADE DED X RETENTION $ 10,000			UMB10008625002	7/24/2025	7/24/2026	EACH OCCURRENCE AGGREGATE	$ 4,000,000 $ 4,000,000
A	**WORKERS COMPENSATION AND EMPLOYERS' LIABILITY** ANYPROPRIETOR/PARTNER/EXECUTIVE OFFICER/MEMBER EXCLUDED? (Mandatory in NH) Y/N [N] N/A If yes, describe under DESCRIPTION OF OPERATIONS below			WC010010323800	7/24/2025	7/24/2026	X PER STATUTE OTH-ER E.L. EACH ACCIDENT E.L. DISEASE - EA EMPLOYEE E.L. DISEASE - POLICY LIMIT	 $ 1,000,000 $ 1,000,000 $ 1,000,000
B A	Contractor's Pollution Inland Marine Installation Floater			CPLMOL133176 CM10008624802	7/24/2025 7/24/2025	7/24/2026 7/24/2026	Limit Scheduled Equipment Installation Floater	$1,000,000 $336,750 $650,000

DESCRIPTION OF OPERATIONS / LOCATIONS / VEHICLES (ACORD 101, Additional Remarks Schedule, may be attached if more space is required)

Installation Floater Included in Policy Number CM10008624801
Jobsite Limit $650,000
Temporary Storage Limit $100,000
Transit Limit $300,000
Deductible $1,000

Project Name: CIP Trimmier Park Lights Upgrade Project Location: 3600 Alba Club Road, Mobile, AL 36605 Project Number: PR-068-24
See Attached...

CERTIFICATE HOLDER

City of Mobile
Real Estate Asset Management
PO Box 1827
Mobile AL 36633-1827

CANCELLATION

SHOULD ANY OF THE ABOVE DESCRIBED POLICIES BE CANCELLED BEFORE THE EXPIRATION DATE THEREOF, NOTICE WILL BE DELIVERED IN ACCORDANCE WITH THE POLICY PROVISIONS.

AUTHORIZED REPRESENTATIVE

Chuck H. Fyfield

© 1988-2015 ACORD CORPORATION. All rights reserved.

AGENCY CUSTOMER ID: BILLSMI-02

LOC #:

ADDITIONAL REMARKS SCHEDULE

AGENCY	NAMED INSURED
Acentria Insurance - Pensacola	Bill Smith Electric, Inc P.O. Box 1057 Gonzalez FL 32560
POLICY NUMBER	
CARRIER / NAIC CODE	EFFECTIVE DATE:

ADDITIONAL REMARKS

THIS ADDITIONAL REMARKS FORM IS A SCHEDULE TO ACORD FORM,

FORM NUMBER: 25 FORM TITLE: CERTIFICATE OF LIABILITY INSURANCE

City of Mobile must be notified of cancellation within 30 days, and non-payment within 10 days. City of Mobile is included as an Additional Insured in respect to General Liability, Automobile Liability and Umbrella Liability. All policies, except workers compensation, shall be Primary and Non-contributory with any other insurance in force or which may be purchased by Additional Insured. Waiver of Subrogation applies in favor of City of Mobile with respect to General Liability, Automobile Liability, Umbrella Liability, and Workers Compensation and Employer's Liability.

ACORD 101 (2008/01)

© 2008 ACORD CORPORATION. All rights reserved.

The ACORD name and logo are registered marks of ACORD

THIS ENDORSEMENT CHANGES THE POLICY. PLEASE READ IT CAREFULLY.

AUTOMATIC INSURED – BUSINESS AUTO POLICY PRIMARY/NON-CONTRIBUTING WHEN REQUIRED BY CONTRACT

This endorsement modifies insurance provided under the following:

BUSINESS AUTO COVERAGE FORM

This endorsement is subject to the terms, conditions, exclusions and any other provisions of the BUSINESS AUTO COVERAGE FORM or any endorsement attached thereto unless changes or additions are indicated below.

For the purpose of this endorsement, Section II.A.1. Who Is An Insured is amended by adding the following:

1. Any person or organization when you and such person have agreed in writing in a contract signed and executed by you prior to the loss for which coverage is sought, that such person or organization be added as an "insured" on your auto policy. Such person or organization shall be an "insured" to the extent your negligent actions or omissions impose liability on such "insured" without fault on its part.

2. This insurance is primary and non-contributory to other liability coverages of the person or organization being added to this policy as an "insured" when so required in a written contract or agreement that is executed prior to the loss for which coverage is sought.

 Includes copyrighted material of the Insurance Services Office, Inc., with its permission.
Copyright 2015 FCCI Insurance Group.
Insured Copy

THIS ENDORSEMENT CHANGES THE POLICY. PLEASE READ IT CAREFULLY.

AUTOMATIC INSURED – BUSINESS AUTO POLICY PRIMARY/NON-CONTRIBUTING WHEN REQUIRED BY CONTRACT

This endorsement modifies insurance provided under the following:

BUSINESS AUTO COVERAGE FORM

This endorsement is subject to the terms, conditions, exclusions and any other provisions of the BUSINESS AUTO COVERAGE FORM or any endorsement attached thereto unless changes or additions are indicated below.

For the purpose of this endorsement, Section II.A.1. Who Is An Insured is amended by adding the following:

1. Any person or organization when you and such person have agreed in writing in a contract signed and executed by you prior to the loss for which coverage is sought, that such person or organization be added as an "insured" on your auto policy. Such person or organization shall be an "insured" to the extent your negligent actions or omissions impose liability on such "insured" without fault on its part.

2. This insurance is primary and non-contributory to other liability coverages of the person or organization being added to this policy as an "insured" when so required in a written contract or agreement that is executed prior to the loss for which coverage is sought.

 Includes copyrighted material of the Insurance Services Office, Inc., with its permission.
Copyright 2015 FCCI Insurance Group.
Insured Copy

THIS ENDORSEMENT CHANGES THE POLICY. PLEASE READ IT CAREFULLY.

AUTO FIRST CHOICE COVERAGE ENDORSEMENT

This endorsement modifies insurance provided under the following:

BUSINESS AUTO COVERAGE FORM

NOTE: The following are additions, replacements and amendments to the Business Auto Coverage Form, and will apply unless excluded by separate endorsement(s) to the Business Auto Coverage Form.

With respect to coverages provided by this endorsement, the provisions of the Business Auto Coverage Form apply unless modified by this endorsement.

The Business Auto Coverage Form is amended as follows:

SECTION II – COVERED AUTOS LIABILITY COVERAGE is amended as follows:

A. Paragraph **1. Who Is An Insured** in section **A. Coverage** is amended by the addition of the following:

d. Any legally incorporated subsidiary of yours in which you own more than 50% of the voting stock on the effective date of this coverage form. However, "insured" does not include any subsidiary that is an "insured" under any other liability policy or would be an "insured" under such a policy but for its termination or the exhaustion of its limits of insurance. In order for such subsidiaries to be considered insured under this policy, you must notify us of such subsidiaries within 60 days of policy effective date.

e. Any organization you newly acquire or form during the policy period, other than a partnership or joint venture, and over which you maintain sole ownership or a majority interest. However, coverage under this provision:

(1) Does not apply if the organization you acquire or form is an "insured" under another liability policy or would be an "insured" under such a policy but for its termination or the exhaustion of its limits of insurance;

(2) Does not apply to "bodily injury" or "property damage" that occurred before you acquired or formed the organization; and

(3) Is afforded only for the first 90 days after you acquire or form the organization or until the end of the policy period, whichever comes first.

f. Any person or organization who is required under a written contract or agreement between you and that person or organization, that is signed and executed by you before the "bodily injury" or "property damage" occurs and that is in effect during the policy period, to be named as an additional insured is an "insured" for Liability Coverage, but only for damages to which this insurance applies and only to the extent that person or organization qualifies as an "insured" under the Who Is An Insured provision contained in Section II.

g. Any "employee" of yours using:

(1) a covered "auto" you do not own, hire or borrow, or a covered "auto" not owned by an "employee" or a member of his or her household, while performing duties related to the conduct of your business or your personal affairs; or

(2) an "auto" hired or rented under a contract or agreement in that "employee's" name, with your permission, while performing duties related to the conduct of your business. However, your "employee" does not qualify as an insured under this paragraph (2) while using a covered "auto" rented from you or from any member of the "employee's" household

h. Your members, if you are a limited liability company, while using a covered "auto" you do not own, hire or borrow, while performing duties related to the conduct of your business or your personal affairs.

 Includes copyrighted material of the Insurance Services Office, Inc., with its permission.
Copyright 2021 FCCI Insurance Group
Insured Copy

B. Paragraphs **(2)** and **(4)** under section **2. Coverage Extensions, a. Supplementary Payments** are deleted and replaced by the following:

(2) Up to $3,000 for cost of bail bonds (including bonds for related traffic violations) required because of an "accident" we cover. We do not have to furnish these bonds.

(4) All reasonable expenses incurred by the "insured" solely at our request, including actual loss of earnings up to $500 a day because of time off from work.

C. Paragraph **5.** under section **B. Exclusions** is deleted and replaced by the following:

5. Fellow Employee

"Bodily injury" to:

a. Any fellow "employee" of the "insured" arising out of and in the course of a fellow "employee's" employment or while performing duties related to the conduct of your business. However, this exclusion does not apply to your "employees" that are officers or managers if the "bodily injury" results from the use of a covered "auto" you own, hire or borrow. Coverage is excess over any other collectible insurance; or

b. The spouse, child, parent, brother or sister of that fellow "employee" as a consequence of Paragraph **a.** above.

SECTION III – PHYSICAL DAMAGE COVERAGE is amended as follows:

A. Paragraph **4. Coverage Extensions** under section **A. Coverage** is deleted and replaced by the following:

4. Coverage Extensions

a. Transportation Expenses

We will pay up to $50 per day to a total maximum of $1,500 for temporary transportation expense incurred by you due to covered loss to any covered auto. We will pay only for those covered "autos" for which you carry either Comprehensive or Specified Causes Of Loss Coverage. We will pay for temporary transportation expenses incurred during the period beginning 24 hours after a loss and ending, regardless of the policy's expiration, when the covered "auto" is returned to use or we pay for its "loss".

b. Loss of Use Expenses

For Hired Auto Physical Damage, we will pay expenses for which an "insured" becomes legally responsible to pay for loss of use of a vehicle rented or hired without a driver under a written rental contract or agreement. We will pay for loss of use expenses if caused by:

(1) Other than collision only if the Declarations indicate that Comprehensive Coverage is provided for hired "autos";

(2) Specified Causes of Loss only if the Declarations indicate that Specified Causes of Loss Coverage is provided for hired "autos"; or

(3) Collision only if the Declarations indicate that Collision Coverage is provided for hired "autos".

However, the most we will pay for any expenses for loss of use to any one vehicle is $75 per day, to a total maximum of $1,500.

B. The following is added to paragraph **4. Coverage Extensions** under section **A. Coverage**:

c. Fire Department Service Charge

When a fire department is called to save or protect a covered "auto", its equipment, its contents, or occupants from a covered cause of loss, we will pay up to $1,000 for your liability for fire department service charges assumed by contractor or agreement prior to loss.

No deductible applies to this additional coverage.

 Includes copyrighted material of the Insurance Services Office, Inc., with its permission.
Copyright 2021 FCCI Insurance Group
Insured Copy

d. Auto Loan/Lease Gap Coverage

The following provisions apply:

(1) If a long term leased "auto", under an original lease agreement, is a covered "auto" under this coverage form and the lessor of the covered "auto" is named as an additional insured under this policy, in the event of a total loss to the leased covered "auto", we will pay any unpaid amount due on the lease, less the amount paid under the Physical Damage Coverage Section of the policy; and less any:

(a) Overdue lease or loan payments including penalties, interest, or other charges resulting from overdue payments at the time of the "loss";

(b) Financial penalties imposed under a lease for excessive use, abnormal wear and tear or high mileage;

(c) Security deposits not refunded by the lessor;

(d) Costs for extended warranties, Credit Life Insurance, Health Accident or Disability Insurance purchased with the loan or lease; and

(e) Carry-over balances from previous loans or leases.

(2) If an owned "auto" is a covered "auto" under this coverage form and the loss payee of the covered "auto" is named a loss payee under this policy, in the event of a total loss to the covered "auto", we will pay any unpaid amount due on the loan, less the amount paid under the Physical Damage Coverage Section of the policy; and less any;

(a) Overdue loan payments at the time of the "loss";

(b) Costs for extended warranties, Credit Life Insurance, Health Accident or Disability Insurance purchased with the loan; and

(c) Carry-over balances from previous loans.

C. Paragraph **3.** under section **B. Exclusions** is deleted and replaced by the following:

3. We will not pay for "loss" due and confined to:

a. Wear and tear, freezing, mechanical or electrical breakdown

b. Blowouts, punctures or other road damage to tires

This exclusion does not apply to such "loss" resulting from the total theft of a covered "auto".

However, this exclusion does not include the discharge of an airbag in a covered "auto" you own that inflates due to a cause other than a cause of "loss" set forth in Paragraphs **A.1.b and A.1.c.**but only:

a. If that "auto" is a covered "auto" for Comprehensive Coverage under this policy;

b. The airbags are not covered under any warranty; and

c. The airbags were not intentionally inflated

We will pay up to a maximum of $1,000 for any one "loss".

D. Section **D. Deductible** is deleted and replaced by the following:

D. Deductible

For each covered "auto", our obligation to pay for, repair, return or replace damaged or stolen property will be reduced by the applicable deductible shown in the Declarations prior to the application of the Limit of Insurance provided that:

1. The Comprehensive or Specified Causes of Loss Coverage deductible applies only to "loss" caused by:

a. Theft or mischief or vandalism; or

b. All perils.

 Includes copyrighted material of the Insurance Services Office, Inc., with its permission.
Copyright 2021 FCCI Insurance Group
Insured Copy

2. Regardless of the number of covered "autos" damaged or stolen, the maximum deductible applicable for all "loss" in any one event caused by:
   a. Theft or mischief or vandalism; or
   b. All perils;

   will be equal to five times the highest deductible applicable to any one covered "auto" on the Policy for Comprehensive or Specified Causes of Loss Coverage. The application of the highest deductible used to calculate the maximum deductible will be made regardless of which covered "autos" were damaged or stolen in the "loss".
3. Any Comprehensive Coverage deductible shown in the Declarations does not apply to:
   a. "Loss" arising out of theft of your vehicle if your vehicle is equipped with an active GPS tracking system.
   b. Glass damage if repaired rather than replaced.

SECTION IV – BUSINESS AUTO CONDITIONS is amended as follows:

A. The following is added to paragraph **a.** under section **A. Loss Conditions, 2. Duties in the Event of Accident, Claim, Suit or Loss**:

This duty applies when the "accident", claim, "suit" or "loss" is first known to:

(a) You, if you are an individual;

(b) A partner, if you are a partnership;

(c) An executive officer or insurance manager, if you are a corporation; or

(d) A member or manager, if you are a limited liability company.

B. Condition **5. Transfer of Rights of Recovery against Others to Us** under section **A. Loss Conditions** is deleted and replaced by the following:

5. Transfer of Rights of Recovery against Others to Us

If a person or organization to or for whom we make payment under this coverage form has rights to recover damages from another, those rights are transferred to us. That person or organization must do everything necessary to secure our rights and must do nothing after "accident" or "loss" to impair them. However, if the insured has waived rights to recover through a written contract, or if your work was commenced under a letter of intent or work order, subject to a subsequent reduction in writing of such a waiver with customers whose customary contracts require a waiver, we waive any right of recovery we may have under this coverage form.

C. The following is added to Condition **2. Concealment, Misrepresentation or Fraud** under section **B. General Conditions**:

However, if you unintentionally fail to disclose any hazards at the inception of your policy, we will not deny coverage under this coverage form because of such failure. This provision does not affect our right to collect additional premium or exercise our right of cancellation or non-renewal.

D. Paragraph **b.** of Condition **5. Other Insurance** under section **B. General Conditions** is deleted and replaced by the following:

b. For Hired Auto Physical Damage Coverage, the following are deemed to be covered "autos" you own;

(1) Any covered "auto" you lease, hire, rent or borrow; and

(2) Any covered "auto" hired or rented by your "employee" under a contract in that individual "employee's" name, with your permission, while performing duties related to the conduct of your business. However, any "auto" that is leased, hired, rented or borrowed with a driver is not a covered "auto", nor is any "auto" you hire from any of your "employees", partners (if you are a partnership), members (if you are a limited liability company), or members of their households.

 Includes copyrighted material of the Insurance Services Office, Inc., with its permission.
Copyright 2021 FCCI Insurance Group
Insured Copy

THIS ENDORSEMENT CHANGES THE POLICY. PLEASE READ IT CAREFULLY.

ADDITIONAL INSURED – OWNERS, LESSEES OR CONTRACTORS – AUTOMATIC STATUS WHEN REQUIRED IN CONSTRUCTION AGREEMENT WITH YOU – ONGOING OPERATIONS AND PRODUCTS-COMPLETED OPERATIONS

This endorsement modifies insurance provided under the following:

COMMERCIAL GENERAL LIABILITY COVERAGE FORM

SCHEDULE (OPTIONAL)

Name of Additional Insured Persons or Organizations
(As required by written contract or agreement per Paragraph A. below.)

Locations of Covered Operations
(As per the written contract or agreement, provided the location is within the "coverage territory".)

(Information required to complete this Schedule, if not shown above, will be shown in the Declarations.)

A. SECTION II – WHO IS AN INSURED is amended to include as an additional insured:

1. Any person or organization for whom you are performing operations when you and such person or organization have agreed in writing in a contract or agreement in effect during the term of this policy that such person or organization be added as an additional insured on your policy; and
2. Any other person or organization you are required to add as an additional insured under the contract or agreement described in Paragraph 1. above; and
3. The particular person or organization, if any, scheduled above.

Such person(s) or organization(s) is an additional insured only with respect to liability for "bodily injury", "property damage" or "personal and advertising injury" occurring after the execution of the contract or agreement described in Paragraph 1. above and caused, in whole or in part, by:

1. Your acts or omissions; or
2. The acts or omissions of those acting on your behalf in the performance of your ongoing operations for the additional insured; or
3. "Your work" performed for the additional insured and included in the "products-completed operations hazard" if such coverage is specifically required in the written contract or agreement.

However, the insurance afforded to such additional insured(s) described above:

1. Only applies to the extent permitted by law;
2. Will not be broader than that which you are required by the contract or agreement to provide for such additional insured;
3. Will not be broader than that which is afforded to you under this policy; and
4. Nothing herein shall extend the term of this policy.

 Includes copyrighted material of the Insurance Services Offices, Inc. with its permission.
Copyright 2020 FCCI Insurance Group.

Insured Copy

B. The insurance provided to the additional insured does not apply to "bodily injury", "property damage" or "personal and advertising injury" arising out of the rendering of, or the failure to render, any professional architectural, engineering or surveying services, including:

1. The preparing, approving, or failing to prepare or approve, maps, shop drawings, opinions, reports, surveys, field orders, change orders or drawings and specifications; or

2. Supervisory, inspection, architectural or engineering activities.

C. This insurance is excess over any other valid and collectible insurance available to the additional insured whether on a primary, excess, contingent or any other basis; unless the written contract or agreement requires that this insurance be primary and non-contributory, in which case this insurance will be primary and non-contributory relative to insurance on which the additional insured is a Named Insured.

D. With respect to the insurance afforded to these additional insureds, the following is added to **SECTION III – LIMITS OF INSURANCE**:

The most we will pay on behalf of the additional insured is the amount of insurance:

1. Required by the contract or agreement described in Paragraph **A.1.**; or

2. Available under the applicable Limits of Insurance;

whichever is less.

This endorsement shall not increase the applicable Limits of Insurance.

E. SECTION IV – COMMERCIAL GENERAL LIABILITY CONDITIONS is amended as follows:

Paragraph **2. Duties In The Event of Occurrence, Offense, Claim Or Suit** is amended to add the following additional conditions applicable to the additional insured:

An additional insured under this endorsement must as soon as practicable:

1. Give us written notice of an "occurrence" or an offense which may result in a claim or "suit" under this insurance, and of any claim or "suit" that does result;

2. Send us copies of all legal papers received in connection with the claim or "suit", cooperate with us in the investigation or settlement of the claim or defense against the "suit", and otherwise comply with all policy conditions; and

3. Tender the defense and indemnity of any claim or "suit" to any provider of other insurance which would cover the additional insured for a loss we cover under this endorsement and agree to make available all such other insurance. However, this condition does not affect Paragraph **C.** above.

We have no duty to defend or indemnify an additional insured under this endorsement until we receive from the additional insured written notice of a claim or "suit".

F. This endorsement does not apply to any additional insured or project that is specifically identified in any other additional insured endorsement attached to the **COMMERCIAL GENERAL LIABILITY COVERAGE FORM**.

 Includes copyrighted material of the Insurance Services Offices, Inc. with its permission.
Copyright 2020 FCCI Insurance Group.

4. Other Insurance

If other valid and collectible insurance is available to the insured for a loss we cover under Coverages **A** or **B** of this Coverage Part, our obligations are limited as follows:

a. Primary Insurance

This insurance is primary except when Paragraph **b.** below applies. If this insurance is primary, our obligations are not affected unless any of the other insurance is also primary. Then, we will share with all that other insurance by the method described in Paragraph **c.** below.

b. Excess Insurance

(1) This insurance is excess over:

(a) Any of the other insurance, whether primary, excess, contingent or on any other basis:

(i) That is Fire, Extended Coverage, Builder's Risk, Installation Risk or similar coverage for "your work";

(ii) That is Fire insurance for premises rented to you or temporarily occupied by you with permission of the owner;

(iii) That is insurance purchased by you to cover your liability as a tenant for "property damage" to premises rented to you or temporarily occupied by you with permission of the owner; or

(iv) If the loss arises out of the maintenance or use of aircraft, "autos" or watercraft to the extent not subject to Exclusion **g.** of Section **I** – Coverage **A** – Bodily Injury And Property Damage Liability.

(b) Any other primary insurance available to you covering liability for damages arising out of the premises or operations, or the products and completed operations, for which you have been added as an additional insured.

(2) When this insurance is excess, we will have no duty under Coverages **A** or **B** to defend the insured against any "suit" if any other insurer has a duty to defend the insured against that "suit". If no other insurer defends, we will undertake to do so, but we will be entitled to the insured's rights against all those other insurers.

(3) When this insurance is excess over other insurance, we will pay only our share of the amount of the loss, if any, that exceeds the sum of:

(a) The total amount that all such other insurance would pay for the loss in the absence of this insurance; and

(b) The total of all deductible and self-insured amounts under all that other insurance.

(4) We will share the remaining loss, if any, with any other insurance that is not described in this Excess Insurance provision and was not bought specifically to apply in excess of the Limits of Insurance shown in the Declarations of this Coverage Part.

c. Method Of Sharing

If all of the other insurance permits contribution by equal shares, we will follow this method also. Under this approach each insurer contributes equal amounts until it has paid its applicable limit of insurance or none of the loss remains, whichever comes first.

If any of the other insurance does not permit contribution by equal shares, we will contribute by limits. Under this method, each insurer's share is based on the ratio of its applicable limit of insurance to the total applicable limits of insurance of all insurers.

5. Premium Audit

a. We will compute all premiums for this Coverage Part in accordance with our rules and rates.

b. Premium shown in this Coverage Part as advance premium is a deposit premium only. At the close of each audit period we will compute the earned premium for that period and send notice to the first Named Insured. The due date for audit and retrospective premiums is the date shown as the due date on the bill. If the sum of the advance and audit premiums paid for the policy period is greater than the earned premium, we will return the excess to the first Named Insured.

c. The first Named Insured must keep records of the information we need for premium computation, and send us copies at such times as we may request.

6. Representations

By accepting this policy, you agree:

a. The statements in the Declarations are accurate and complete;

© Insurance Services Office, Inc., 2012

COMMON POLICY CONDITIONS

All Coverage Parts included in this policy are subject to the following conditions.

A. Cancellation

1. The first Named Insured shown in the Declarations may cancel this policy by mailing or delivering to us advance written notice of cancellation.
2. We may cancel this policy by mailing or delivering to the first Named Insured written notice of cancellation at least:
   a. 10 days before the effective date of cancellation if we cancel for nonpayment of premium; or
   b. 30 days before the effective date of cancellation if we cancel for any other reason.
3. We will mail or deliver our notice to the first Named Insured's last mailing address known to us.
4. Notice of cancellation will state the effective date of cancellation. The policy period will end on that date.
5. If this policy is cancelled, we will send the first Named Insured any premium refund due. If we cancel, the refund will be pro rata. If the first Named Insured cancels, the refund may be less than pro rata. The cancellation will be effective even if we have not made or offered a refund.
6. If notice is mailed, proof of mailing will be sufficient proof of notice.

B. Changes

This policy contains all the agreements between you and us concerning the insurance afforded. The first Named Insured shown in the Declarations is authorized to make changes in the terms of this policy with our consent. This policy's terms can be amended or waived only by endorsement issued by us and made a part of this policy.

C. Examination Of Your Books And Records

We may examine and audit your books and records as they relate to this policy at any time during the policy period and up to three years afterward.

D. Inspections And Surveys

1. We have the right to:
   a. Make inspections and surveys at any time;
   b. Give you reports on the conditions we find; and
   c. Recommend changes.
2. We are not obligated to make any inspections, surveys, reports or recommendations and any such actions we do undertake relate only to insurability and the premiums to be charged. We do not make safety inspections. We do not undertake to perform the duty of any person or organization to provide for the health or safety of workers or the public. And we do not warrant that conditions:
   a. Are safe or healthful; or
   b. Comply with laws, regulations, codes or standards.
3. Paragraphs **1.** and **2.** of this condition apply not only to us, but also to any rating, advisory, rate service or similar organization which makes insurance inspections, surveys, reports or recommendations.
4. Paragraph **2.** of this condition does not apply to any inspections, surveys, reports or recommendations we may make relative to certification, under state or municipal statutes, ordinances or regulations, of boilers, pressure vessels or elevators.

E. Premiums

The first Named Insured shown in the Declarations:

1. Is responsible for the payment of all premiums; and
2. Will be the payee for any return premiums we pay.

F. Transfer Of Your Rights And Duties Under This Policy

Your rights and duties under this policy may not be transferred without our written consent except in the case of death of an individual named insured.

If you die, your rights and duties will be transferred to your legal representative but only while acting within the scope of duties as your legal representative. Until your legal representative is appointed, anyone having proper temporary custody of your property will have your rights and duties but only with respect to that property.

Copyright, Insurance Services Office, Inc., 1998

Insured Copy

THIS ENDORSEMENT CHANGES THE POLICY. PLEASE READ IT CAREFULLY.

FIRST CHOICE CONTRACTORS LIABILITY ENDORSEMENT

This endorsement modifies insurance provided under the following:

COMMERCIAL GENERAL LIABILITY COVERAGE FORM

NOTE: The following are additions, replacements and amendments to the Commercial General Liability Coverage Form, and will apply unless excluded by separate endorsement(s) to the Commercial General Liability Coverage Form.

The COMMERCIAL GENERAL LIABILITY COVERAGE FORM is amended as follows:

SECTION I - COVERAGES, COVERAGE A. BODILY INJURY AND PROPERTY DAMAGE is amended as follows:

1. **Extended "Property Damage"**

   Exclusion 2.a., Expected or Intended Injury, is replaced with the following:

   a. "Bodily injury" or "property damage" expected or intended from the standpoint of the insured. This exclusion does not apply to "bodily injury" or "property damage" resulting from the use of reasonable force to protect persons or property.

2. **Non-owned Watercraft**

   Exclusion 2.g. (2) (a) is replaced with the following:

   (a) Less than 51 feet long; and

3. **Property Damage Liability – Borrowed Equipment**

   The following is added to Exclusion 2.j. (4):

   Paragraph (4) of this exclusion does not apply to "property damage" to borrowed equipment while at a jobsite and not being used to perform operations. The most we will pay for "property damage" to any one borrowed equipment item under this coverage is $25,000 per "occurrence". The insurance afforded under this provision is excess over any other valid and collectible property insurance (including deductible) available to the insured, whether primary, excess, contingent or on any other basis.

4. **Limited Electronic Data Liability**

   Exclusion 2.p. is replaced with the following:

   p. Electronic Data

      Damages arising out of the loss of, loss of use of, damage to, corruption of, inability to access, or inability to manipulate "electronic data" that does not result from physical injury to tangible property.

   The most we will pay under Coverage A for "property damage" because of all loss of "electronic data" arising out of any one "occurrence" is $10,000.

   We have no duty to investigate or defend claims or "suits" covered by this Limited Electronic Data Liability coverage.

   The following definition is added to **SECTION V – DEFINITIONS** of the Coverage Form:

   "Electronic data" means information, facts or programs stored as or on, created or used on, or transmitted to or from computer software (including systems and applications software), hard or floppy disks, CD-ROMS, tapes, drives, cells, data processing devices or any other media which are used with electronically controlled equipment.

 Includes copyrighted material of the Insurance Services Office, Inc., with its permission.
Copyright 2020 FCCI Insurance Group
Insured Copy

For purposes of this **Limited Electronic Data Liability** coverage, the definition of "Property Damage" in **SECTION V – DEFINITIONS** of the Coverage Form is replaced by the following:

17. "Property damage" means:

    a. Physical injury to tangible property, including all resulting loss of use of that property. All such loss of use shall be deemed to occur at the time of the physical injury that caused it;

    b. Loss of use of tangible property that is not physically injured. All such loss of use shall be deemed to occur at the time of the "occurrence" that caused it;

    c. Loss of, loss of use of, damage to, corruption of, inability to access, or inability to properly manipulate "electronic data", resulting from physical injury to tangible property. All such loss of "electronic data" shall be deemed to occur at the time of the "occurrence" that caused it.

    For purposes of this insurance, "electronic data" is not tangible property.

SECTION I – COVERAGES, COVERAGE B. PERSONAL AND ADVERTISING INJURY LIABILITY is amended as follows:

Paragraph 2.e. Exclusions – the Contractual Liability Exclusion is deleted.

SECTION I – COVERAGES, the following coverages are added:

COVERAGE D. VOLUNTARY PROPERTY DAMAGE

1. Insuring Agreement

We will pay, at your request, for "property damage" caused by an "occurrence", to property of others caused by you, or while in your possession, arising out of your business operations. The amount we will pay for damages is described in SECTION III LIMITS OF INSURANCE.

2. Exclusions

This insurance does not apply to:

"Property Damage" to:

a. Property at premises owned, rented, leased or occupied by you;

b. Property while in transit;

c. Property owned by, rented to, leased to, loaned to, borrowed by, or used by you;

d. Premises you sell, give away, or abandon, if the "property damage" arises out of any part of those premises;

e. Property caused by or arising out of the "products-completed operations hazard";

f. Motor vehicles;

g. "Your product" arising out of it or any part of it; or

h. "Your work" arising out of it or any part of it.

3. Deductible

We will not pay for loss in any one "occurrence" until the amount of loss exceeds $250. We will then pay the amount of loss in excess of $250 up to the applicable limit of insurance.

4. Cost Factor

In the event of a covered loss, you shall, if requested by us, replace the damaged property or furnish the labor and materials necessary for repairs thereto at your actual cost, excluding profit or overhead charges.

 Includes copyrighted material of the Insurance Services Office, Inc., with its permission.
Copyright 2020 FCCI Insurance Group
Insured Copy

The insurance afforded under COVERAGE D is excess over any other valid and collectible property or inland marine insurance (including the deductible applicable to the property or inland marine coverage) available to you whether primary, excess, contingent or any other basis.

Coverage D covers unintentional damage or destruction, but does not cover disappearance, theft, or loss of use.

The insurance under COVERAGE D does not apply if a loss is paid under COVERAGE E.

COVERAGE E. CARE, CUSTODY OR CONTROL

1. Insuring Agreement

We will pay those sums that the insured becomes legally obligated to pay as damages because of "property damage" caused by an "occurrence", to property of others while in your care, custody, or control or property of others as to which you are exercising physical control if the "property damage" arises out of your business operations. The amount we will pay for damages is described in SECTION III LIMITS OF INSURANCE.

2. Exclusions

This insurance does not apply to:

"Property Damage" to:

a. Property at premises owned, rented, leased or occupied by you;

b. Property while in transit;

c. Premises you sell, give away, or abandon, if the "property damage" arises out of any part of those premises;

d. Property caused by or arising out of the "products-completed operations hazard";

e. Motor vehicles;

f. "Your product" arising out of it or any part of it; or

g. "Your work" arising out of it or any part of it.

3. Deductible

We will not pay for loss in any one "occurrence" until the amount of loss exceeds $250. We will then pay the amount of loss in excess of $250 up to the applicable limit of insurance.

4. Cost Factor

In the event of a covered loss, you shall, if requested by us, replace the damaged property or furnish the labor and materials necessary for repairs thereto at your actual cost, excluding profit or overhead charges.

The insurance afforded under COVERAGE E is excess over any other valid and collectible property or inland marine insurance (including the deductible applicable to the property or inland marine coverage) available to you whether primary, excess, contingent or any other basis.

The insurance under COVERAGE E does not apply if a loss is paid under COVERAGE D.

COVERAGE F. LIMITED PRODUCT WITHDRAWAL EXPENSE

1. Insuring Agreement

a. If you are a "seller", we will reimburse you for "product withdrawal expenses" associated with "your product" incurred because of a "product withdrawal" to which this insurance applies.

The amount of such reimbursement is limited as described in SECTION III - LIMITS OF INSURANCE. No other obligation or liability to pay sums or perform acts or services is covered.

 Includes copyrighted material of the Insurance Services Office, Inc., with its permission.
Copyright 2020 FCCI Insurance Group
Insured Copy

a. This insurance applies to a "product withdrawal" only if the "product withdrawal" is initiated in the "coverage territory" during the policy period because:

(1) You determine that the "product withdrawal" is necessary; or

(2) An authorized government entity has ordered you to conduct a "product withdrawal".

c. We will reimburse only those "product withdrawal expenses" which are incurred and reported to us within one year of the date the "product withdrawal" was initiated.

d. The initiation of a "product withdrawal" will be deemed to have been made only at the earliest of the following times:

(1) When you have announced, in any manner, to the general public, your vendors or to your employees (other than those employees directly involved in making the determination) your decision to conduct a "product withdrawal" This applies regardless of whether the determination to conduct a "product withdrawal" is made by you or is requested by a third party;

(2) When you received, either orally or in writing, notification of an order from an authorized government entity to conduct a "product withdrawal; or

(3) When a third party has initiated a "product withdrawal" and you communicate agreement with the "product withdrawal", or you announce to the general public, your vendors or to your employees (other than those employees directly involved in making the determination) your decision to participate in the "product withdrawal", whichever comes first.

e. "Product withdrawal expenses" incurred to withdraw "your products" which contain:

(1) The same "defect" will be deemed to have arisen out of the same "product withdrawal"; or

(2) A different "defect" will be deemed to have arisen out of a separate "product withdrawal" if newly determined or ordered in accordance with paragraph 1.b of this coverage.

2. Exclusions

This insurance does not apply to "product withdrawal" expenses" arising out of:

a. Any "product withdrawal" initiated due to:

(1) The failure of "your products" to accomplish their intended purpose, including any breach of warranty of fitness, whether written or implied. This exclusion does not apply if such failure has caused or is reasonably expected to cause "bodily injury" or physical damage to tangible property.

(2) Copyright, patent, trade secret or trademark infringements;

(3) Transformation of a chemical nature, deterioration or decomposition of "your product", except if it is caused by:

(a) An error in manufacturing, design, processing or transportation of "your product"; or

(b) "Product tampering".

(4) Expiration of the designated shelf life of "your product".

b. A "product withdrawal", initiated because of a "defect" in "your product" known to exist by the Named Insured or the Named Insured's "executive officers", prior to the inception date of this Coverage Part or prior to the time "your product" leaves your control or possession.

c. Recall of any specific products for which "bodily injury" or "property damage" is excluded under Coverage A - Bodily Injury And Property Damage Liability by endorsement.

d. Recall of "your products" which have been banned from the market by an authorized government entity prior to the policy period.

e. The defense of a claim or "suit" against you for "product withdrawal expenses".

 Includes copyrighted material of the Insurance Services Office, Inc., with its permission.
Copyright 2020 FCCI Insurance Group
Insured Copy

3. For the purposes of the insurance afforded under COVERAGE F, the following is added to 2. Duties In The Event Of Occurrence, Offense, Claim Or Suit Condition under SECTION IV – COMMERCIAL GENERAL LIABILITY CONDITIONS:

e. Duties In The Event Of A "Defect" Or A "Product Withdrawal"

(1) You must see to it that we are notified as soon as practicable of any actual, suspected or threatened "defect" in "your products", or any governmental investigation, that may result in a "product withdrawal". To the extent possible, notice should include:

(a) How, when and where the "defect" was discovered;

(b) The names and addresses of any injured persons and witnesses; and

(c) The nature, location and circumstances of any injury or damage arising out of use or consumption of "your product".

(2) If a "product withdrawal" is initiated, you must:

(a) Immediately record the specifics of the "product withdrawal" and the date it was initiated;

(b) Send us written notice of the "product withdrawal" as soon as practicable; and

(c) Not release, consign, ship or distribute by any other method, any product, or like or similar products, with an actual, suspected or threatened defect.

(3) You and any other involved insured must:

(a) Immediately send us copies of pertinent correspondence received in connection with the "product withdrawal";

(b) Authorize us to obtain records and other information; and

(c) Cooperate with us in our investigation of the "product withdrawal".

4. For the purposes of this Coverage F, the following definitions are added to the Definitions Section:

a. "Defect" means a defect, deficiency or inadequacy that creates a dangerous condition.

b. "Product tampering" is an act of intentional alteration of "your product" which may cause or has caused "bodily injury" or physical injury to tangible property.

When "product tampering" is known, suspected or threatened, a "product withdrawal" will not be limited to those batches of "your product" which are known or suspected to have been tampered with.

c. "Product withdrawal" means the recall or withdrawal of "your products", or products which contain "your products", from the market or from use, by any other person or organization, because of a known or suspected "defect" in "your product", or a known or suspected "product tampering", which has caused or is reasonably expected to cause "bodily injury" or physical injury to tangible property.

d. "Product withdrawal expenses" means those reasonable and necessary extra expenses, listed below paid and directly related to a "product withdrawal":

(1) Costs of notification;

(2) Costs of stationery, envelopes, production of announcements and postage or facsimiles;

(3) Costs of overtime paid to your regular non-salaried employees and costs incurred by your employees, including costs of transportation and accommodations;

(4) Costs of computer time;

(5) Costs of hiring independent contractors and other temporary employees;

(6) Costs of transportation, shipping or packaging;

(7) Costs of warehouse or storage space; or

 Includes copyrighted material of the Insurance Services Office, Inc., with its permission.
Copyright 2020 FCCI Insurance Group
Insured Copy

(8) Costs of proper disposal of "your products", or products that contain "your products", that cannot be reused, not exceeding your purchase price or your cost to produce the products; but "product withdrawal expenses" does not include costs of the replacement, repair or redesign of "your product", or the costs of regaining your market share, goodwill, revenue or profit.

e. "Seller" means a person or organization that manufactures, sells or distributes goods or products. "Seller" does not include a "contractor" as defined elsewhere in this endorsement.

The insurance under COVERAGE F does not apply if a loss is paid under COVERAGE G.

COVERAGE G. CONTRACTORS ERRORS AND OMISSIONS

1. Insuring Agreement

If you are a "contractor", we will pay those sums that you become legally obligated to pay as damages because of "property damage" to "your product", "your work" or "impaired property", due to faulty workmanship, material or design, or products including consequential loss, to which this insurance applies. The damages must have resulted from your negligent act, error or omission while acting in your business capacity as a contractor or subcontractor or from a defect in material or a product sold or installed by you while acting in this capacity. The amount we will pay for damages is described in SECTION III LIMITS OF INSURANCE.

We have no duty to investigate or defend claims or "suits" covered by this Contractors Errors or Omissions coverage.

This coverage applies only if the "property damage" occurs in the "coverage territory" during the policy period.

This coverage does not apply to additional insureds, if any.

Supplementary Payments – Coverage A and B do not apply to Coverage G. Contractors Errors and Omissions.

2. Exclusions

This insurance does not apply to:

a. "Bodily injury" or "personal and advertising injury".

b. Liability or penalties arising from a delay or failure to complete a contract or project, or to complete a contract or project on time.

c. Liability because of an error or omission:

(1) In the preparation of estimates or job costs;

(2) Where cost estimates are exceeded;

(3) In the preparation of estimates of profit or return on capital;

(4) In advising or failure to advise on financing of the work or project; or

(5) In advising or failing to advise on any legal work, title checks, form of insurance or suretyship.

d. Any liability which arises out of any actual or alleged infringement of copyright or trademark or trade dress or patent, unfair competition or piracy, or theft or wrongful taking of concepts or intellectual property.

e. Any liability for damages:

(1) From the intentional dishonest, fraudulent, malicious or criminal acts of the Named Insured, or by any partner, member of a limited liability company, or executive officer, or at the direction of any of them; or

(2) Which is in fact expected or intended by the insured, even if the injury or damage is of a different degree or type than actually expected or intended.

 Includes copyrighted material of the Insurance Services Office, Inc., with its permission.
Copyright 2020 FCCI Insurance Group
Insured Copy

f. Any liability arising out of manufacturer's warranties or guarantees whether express or implied.

g. Any liability arising from "property damage" to property owned by, rented or leased to the insured.

h. Any liability incurred or "property damage" which occurs, in whole or in part, before you have completed "your work." "Your work" will be deemed completed at the earliest of the following times:

(1) When all of the work called for in your contract or work order has been completed;

(2) When all the work to be done at the job site has been completed if your contract calls for work at more than one job site; or

(3) When that part of the work done at a job site has been put to its intended use by any person or organization other than another contractor or subcontractor working on the same project.

Work that may need service or maintenance, correction, repair or replacement, but which is otherwise complete, will be treated as complete.

i. Any liability arising from "property damage" to products that are still in your physical possession.

j. Any liability arising out of the rendering of or failure to render any professional services by you or on your behalf, but only with respect to either or both of the following operations:

(1) Providing engineering, architectural or surveying services to others; and

(2) Providing or hiring independent professionals to provide engineering, architectural or surveying services in connection with construction work you perform.

Professional services include the preparing, approving or failing to prepare or approve, maps, shop drawings, opinions, reports, surveys, field orders, change orders, or drawings and specifications. Professional services also include supervisory or inspection activities performed as part of any related architectural or engineering activities.

But, professional services do not include services within construction means, methods, techniques, sequences and procedures employed by you in connection with construction work you perform.

k. Your loss of profit or expected profit and any liability arising therefrom.

l. "Property damage" to property other than "your product," "your work" or "impaired property."

m. Any liability arising from claims or "suits" where the right of action against the insured has been relinquished or waived.

n. Any liability for "property damage" to "your work" if the damaged work or the work out of which the damage arises was performed on your behalf by a subcontractor.

o. Any liability arising from the substitution of a material or product for one specified on blueprints, work orders, contracts or engineering specifications unless there has been written authorization, or unless the blueprints, work orders, contracts or engineering specifications were written by you, and you have authorized the changes.

p. Liability of others assumed by the insured under any contract or agreement, whether oral or in writing. This exclusion does not apply to liability for damages that the insured would have in the absence of the contract or agreement.

3. For the purposes of Coverage G, the following definition is added to the Definitions section:

a. "Contractor" means a person or organization engaged in activities of building, clearing, filing, excavating or improvement in the size, use or appearance of any structure or land. "Contractor" does not include a "seller" as defined elsewhere in this endorsement.

4. Deductible

We will not pay for loss in any one "occurrence" until the amount of loss exceeds $250. The limits of insurance will not be reduced by the application of the deductible amount.

 Includes copyrighted material of the Insurance Services Office, Inc., with its permission.
Copyright 2020 FCCI Insurance Group

Insured Copy

We may pay any part or all of the deductible amount to effect settlement of any claim or "suit", and upon notification of the action taken, you shall promptly reimburse us for such part of the deductible amount as has been paid by us.

5. Cost Factor

In the event of a covered loss, you shall, if requested by us, replace the damaged property or furnish the labor and materials necessary for repairs thereto at your actual cost, excluding profit or overhead charges.

The insurance under COVERAGE G does not apply if a loss is paid under COVERAGE F.

COVERAGE H. LOST KEY COVERAGE

1. Insuring Agreement

We will pay those sums, subject to the limits of liability described in SECTION III LIMITS OF INSURANCE in this endorsement and the deductible shown below, that you become legally obligated to pay as damages caused by an "occurrence" and due to the loss or mysterious disappearance of keys entrusted to or in the care, custody or control of you or your "employees" or anyone acting on your behalf. The damages covered by this endorsement are limited to the:

a. Actual cost of the keys;

b. Cost to adjust locks to accept new keys; or

c. Cost of new locks, if required, including the cost of installation.

2. Exclusions

This insurance does not apply to:

a. Keys owned by any insured, employees of any insured, or anyone acting on behalf of any insured;

b. Any resulting loss of use; or

c. Any of the following acts by any insured, employees of any insured, or anyone acting on behalf of any insured:

1) Misappropriation;

2) Concealment;

3) Conversion;

4) Fraud; or

5) Dishonesty.

3. Deductible

We will not pay for loss in any one "occurrence" until the amount of loss exceeds $1,000. The limits of insurance will not be reduced by the application of the deductible amount.

We may pay any part or all of the deductible amount to effect settlement of any claim or "suit" and, upon notification of the action taken, you shall promptly reimburse us for such part of the deductible amount as has been paid by us.

EXPANDED COVERAGE FOR TENANT'S PROPERTY AND PREMISES RENTED TO YOU

The first paragraph after subparagraph (6) in Exclusion j., Damage to Property is amended to read as follows:

Paragraphs **(1), (3)** and **(4)** of this exclusion do not apply to "property damage" (other than damage by fire) to premises, including the contents of such premises, rented to you. A separate limit of insurance applies to Damage To Premises Rented To You as described in Section **III** – Limits Of Insurance.

 Includes copyrighted material of the Insurance Services Office, Inc., with its permission.
Copyright 2020 FCCI Insurance Group
Insured Copy

SECTION I - COVERAGES, SUPPLEMENTARY PAYMENTS – COVERAGE A and B is amended as follows:

All references to SUPPLEMENTARY PAYMENTS – COVERAGES A and B are amended to SUPPLEMENTARY PAYMENTS – COVERAGES A, B, D, E, G, and H.

1. Cost of Bail Bonds

Paragraph 1.b. is replaced with the following:

b. Up to $2,500 for cost of bail bonds required because of accidents or traffic law violations arising out of the use of any vehicle to which the Bodily Injury Liability Coverage applies. We do not have to furnish these bonds.

2. Loss of Earnings

Paragraph 1.d. is replaced with the following:

d. All reasonable expenses incurred by the insured at our request to assist us in the investigation or defense of the claim or "suit", including actual loss of earnings up to $500 a day because of time off from work.

SECTION II – WHO IS AN INSURED is amended as follows:

1. Incidental Malpractice

Paragraph 2.a.(1)(d) is replaced with the following:

(d) Arising out of his or her providing or failing to provide professional health care services. However, this exclusion does not apply to a nurse, emergency medical technician or paramedic employed by you to provide medical services, unless:

(i) You are engaged in the occupation or business of providing or offering medical, surgical, dental, x-ray or nursing services, treatment, advice or instruction; or

(ii) The "employee" has another insurance that would also cover claims arising under this provision, whether the other insurance is primary, excess, contingent or on any other basis.

2. Broadened Who Is An Insured

The following are added to Paragraph 2.:

Subsidiaries

e. Your subsidiaries if:

(1) They are legally incorporated entities; and

(2) You own more than 50% of the voting stock in such subsidiaries as of the effective date of this policy. If such subsidiaries are not shown in the Declarations, you must report them to us within 180 days of the inception of your original policy.

Additional Insureds

f. Any person or organization described in paragraphs g. through k. below whom you are required to add as an additional insured on this policy under a written contract or agreement in effect during the term of this policy, provided the written contract or agreement was executed prior to the "bodily injury", "property damage" or "personal and advertising injury" for which the additional insured seeks coverage.

However, the insurance afforded to such additional insured(s):

(1) Only applies to the extent permitted by law;

(2) Will not be broader than that which you are required by the contract or agreement to provide for such additional insured;

(3) Will not be broader than that which is afforded to you under this policy;

(4) Is subject to the conditions described in paragraphs g. through k. below; and

(5) Nothing herein shall extend the term of this policy.

 Includes copyrighted material of the Insurance Services Office, Inc., with its permission.
Copyright 2020 FCCI Insurance Group
Insured Copy

g. Owner, Lessor or Manager of Premises

If the additional insured is an owner, lessor or manager of premises, such person or organization shall be covered only with respect to liability for "bodily injury", "property damage" or "personal and advertising injury" caused, in whole or in part, by you or those acting on your behalf in connection with the ownership, maintenance or use of that part of any premises leased to you and subject to the following additional exclusions:

(1) Any "occurrence" that takes place after you cease to occupy those premises; or

(2) Structural alterations, new construction or demolition operations performed by or on behalf of such person or organization.

h. State or Governmental Agency or Subdivision or Political Subdivision – Permits or Authorizations

If the additional insured is the state or any political subdivision, the state or political subdivision shall be covered only with respect to operations performed by you or on your behalf for which the state or political subdivision has issued a permit or authorization. This insurance does not apply to:

(1) "Bodily injury", "property damage", or "personal and advertising injury" arising out of operations performed for the federal government, state or municipality; or

(2) "Bodily injury" or "property damage" included within the "products-completed operations hazard".

i. Lessor of Leased Equipment

If the additional insured is a lessor of leased equipment, such lessor shall be covered only with respect to liability for "bodily injury", "property damage" or "personal and advertising injury" caused, in whole or in part, by your maintenance, operation or use of equipment leased to you by such person(s) or organization(s). With respect to the insurance afforded to these additional insureds, this insurance does not apply to any "occurrence" which takes place after the equipment lease expires.

j. Mortgagee, Assignee, or Receiver

If the additional Insured is a mortgagee, assignee, or receiver of premises, such mortgagee, assignee or receiver of premises is an additional insured only with respect to their liability as mortgagee, assignee, or receiver and arising out of the ownership, maintenance, or use of the premises by you. This insurance does not apply to structural alterations, new construction and demolition operations performed by or for that person or organization.

k. Vendor

If the additional insured is a vendor, such vendor is an additional insured only with respect to liability for "bodily injury" or "property damage" caused by "your products" which are distributed or sold in the regular course of the vendor's business, subject to the following additional exclusions:

(1) The insurance afforded to the vendor does not apply to:

(a) "Bodily injury" or "property damage" for which the vendor is obligated to pay damages by reason of the assumption of liability in a contract or agreement. This exclusion does not apply to liability for damages that the vendor would have in absence of the contract or agreement.

(b) Any express warranty unauthorized by you;

(c) Any physical or chemical change in "your product" made intentionally by the vendor;

(d) Repackaging, unless unpacked solely for the purpose of inspection, demonstration, testing, or the substitution of parts under instructions from the manufacturer, and then repackaged in the original container;

(e) Any failure to make such inspections, adjustments, tests or servicing as the vendor has agreed to make or normally undertakes to make in the usual course of business, in connection with the distribution or sale of the products;

 Includes copyrighted material of the Insurance Services Office, Inc., with its permission.
Copyright 2020 FCCI Insurance Group
Insured Copy

(f) Demonstration, installation, servicing or repair operations, except such operations performed at the vendor's premises in connection with the sale of the product;

(g) Products which, after distribution or sale by you, have been labeled or relabeled or used as a container, part or ingredient of any other thing or substance by or for the vendor; or

(h) "Bodily injury" or "property damage" arising out of the sole negligence of the vendor for its own acts or omissions or those of its own acts or omissions or those of its employees or anyone else acting on its behalf. However, this exclusion does not apply to:

i. The exceptions contained in Subparagraphs d. or f.; or

ii. Such inspections, adjustments, tests or servicing as the vendor has agreed to make or normally undertakes to make in the usual course of business, in connection with the distribution or sale of the products.

(2) This insurance does not apply to any insured person or organization, from whom you have acquired such products, or any ingredient, part or container, entering into, accompanying or containing such products.

3. Newly Formed or Acquired Organizations

Paragraph 3. is amended as follows:

a. Coverage under this provision is afforded until the end of the policy period.

d. Coverage A does not apply to product recall expense arising out of any withdrawal or recall that occurred before you acquired or formed the organization.

SECTION III – LIMITS OF INSURANCE is amended as follows:

1. Paragraph 2. is replaced with the following:

2. The General Aggregate Limit is the most we will pay for the sum of:

a. Medical expenses under Coverage C;

b. Damages under Coverage A, except damages because of "bodily injury" or "property damage" included in the "products-completed operations hazard";

c. Damages under Coverage B;

d. Voluntary "property damage" payments under Coverage D;

e. Care, Custody or Control damages under Coverage E.; and

f. Lost Key Coverage under Coverage H.

2. Paragraph 5. is replaced with the following:

5. Subject to Paragraph 2. or 3. above, whichever applies, the Each Occurrence Limit is the most we will pay for the sum of:

a. Damages under Coverage A;

b. Medical expenses under Coverage C;

c. Voluntary "property damage" payments under Coverage D;

d. Care, Custody or Control damages under Coverage E;

e. Limited Product Withdrawal Expense under Coverage F;

f. Contractors Errors and Omissions under Coverage G.; and,

g. Lost Key Coverage under Coverage H.

because of all "bodily injury" and "property damage" arising out of any one "occurrence".

3. Paragraph 6. is replaced with the following:

 Includes copyrighted material of the Insurance Services Office, Inc., with its permission.
Copyright 2020 FCCI Insurance Group
Insured Copy

6. Subject to Paragraph 5. above the Damage To Premises Rented To You Limit is the most we will pay under Coverage A for damages because of "property damage" to any one premises, while rented to you, or in the case of damage by fire or explosion, while rented to you or temporarily occupied by you with permission of the owner.

   The Damage to Premises Rented to You Limit is the higher of the Each Occurrence Limit shown in the Declarations or the amount shown in the Declarations as Damage To Premises Rented To You Limit.

4. Paragraph 7. is replaced with the following:

7. Subject to Paragraph 5. above, the higher of $10,000 or the Medical Expense Limit shown in the Declarations is the most we will pay under Coverage C for all medical expenses because of "bodily injury" sustained by any one person.

5. Paragraph 8. is added as follows:

8. Subject to Paragraph 5. above, the most we will pay under Coverage D. Voluntary Property Damage for loss arising out of any one "occurrence" is $1,500. The most we will pay in any one-policy period, regardless of the number of claims made or suits brought, is $3,000.

6. Paragraph 9. is added as follows:

9. Subject to Paragraph 5. above, the most we will pay under Coverage E. Care, Custody or Control for "property damage" arising out of any one "occurrence" is $1,000. The most we will pay in any one-policy period, regardless of the number of claims made or suits brought, is $5,000.

7. Paragraph 10. is added as follows:

10. Subject to Paragraph 5. above, the most we will pay under Coverage F. Limited Product Withdrawal Expense for "product withdrawal expenses" in any one-policy period, regardless of the number of insureds, "product withdrawals" initiated or number of "your products" withdrawn is $10,000.

8. Paragraph 11. is added as follows:

11. Subject to Paragraph 5. above, the most we will pay under Coverage G. Contractors Errors and Omissions for damage in any one-policy period, regardless of the number of insureds, claims or "suits" brought, or persons or organizations making claim or bringing "suits" is $10,000.

    For errors in contract or job specifications or in recommendations of products or materials to be used, this policy will not pay for additional costs of products and materials to be used that would not have been incurred had the correct recommendations or specifications been made.

9. Paragraph 12. is added as follows:

12. Subject to Paragraph 5. above, the most we will pay under Coverage H., Lost Key Coverage for damages arising out of any one occurrence is $50,000.

10. Paragraph 13. is added as follows:

13. The General Aggregate Limit applies separately to:

    a. Each of your projects away from premises owned by or rented to you; or

    b. Each "location" owned by or rented to you.

    "Location" as used in this paragraph means premises involving the same or connecting lots, or premises whose connection is interrupted only by a street, roadway, waterway or right-of-way of a railroad.

11. Paragraph 14. is added as follows:

14. With respect to the insurance afforded to any additional insured provided coverage under this endorsement:

    If coverage provided to the additional insured is required by a contract or agreement, the most we will pay on behalf of the additional insured is the amount of insurance:

 Includes copyrighted material of the Insurance Services Office, Inc., with its permission.
Copyright 2020 FCCI Insurance Group
Insured Copy

a. Required by the contract or agreement; or

b. Available under the applicable Limits of Insurance;

whichever is less.

This endorsement shall not increase the applicable Limits of Insurance.

SECTION IV – COMMERCIAL GENERAL LIABILITY CONDITIONS is amended as follows:

1. **Subparagraph 2.a. of Duties In The Event Of Occurrence, Offense, Claim, or Suit is replaced with the following:**

   a. You must see to it that we are notified as soon as practicable of an "occurrence" or an offense which may result in a claim. This requirement applies only when the "occurrence" or offense is known to the following:

      (1) An individual who is the sole owner;

      (2) A partner, if you are a partnership or joint venture;

      (3) An "executive officer" or insurance manager, if you are a corporation;

      (4) A manager, if you are a limited liability company;

      (5) A person or organization having proper temporary custody of your property if you die;

      (6) The legal representative of you if you die; or

      (7) A person (other than an "employee") or an organization while acting as your real estate manager.

      To the extent possible, notice should include:

      (1) How, when and where the "occurrence" or offense took place;

      (2) The names and addresses of any injured persons and witnesses; and

      (3) The nature and location of any injury or damage arising out of the "occurrence" or offense.

2. **The following is added to Subparagraph 2.b. of Duties In The Event Of Occurrence, Offense, Claim, or Suit:**

   The requirement in 2.b.applies only when the "occurrence" or offense is known to the following:

      (1) An individual who is the sole owner;

      (2) A partner or insurance manager, if you are a partnership or joint venture;

      (3) An "executive officer" or insurance manager, if you are a corporation;

      (4) A manager or insurance manager, if you are a limited liability company;

      (5) Your officials, trustees, board members or insurance manager, if you are a not-for-profit organization;

      (6) A person or organization having proper temporary custody of your property if you die;

      (7) The legal representative of you if you die; or

      (8) A person (other than an "employee") or an organization while acting as your real estate manager.

3. **The following is added to paragraph 2. of Duties in the Event of Occurrence, Offense, Claim or Suit:**

   e. If you report an "occurrence" to your workers compensation carrier that develops into a liability claim for which coverage is provided by the Coverage Form, failure to report such an "occurrence" to us at the time of the "occurrence" shall not be deemed a violation of paragraphs a., b., and c. above. However, you shall give written notice of this "occurrence" to us as soon as you become aware that this "occurrence" may be a liability claim rather than a workers compensation claim.

 Includes copyrighted material of the Insurance Services Office, Inc., with its permission.
Copyright 2020 FCCI Insurance Group
Insured Copy

4. Paragraph 6. is replaced with the following:

6. Representations

By accepting this policy, you agree:

a. The statements in the Declarations are accurate and complete;

b. Those statements are based upon representations you made to us; and

c. We have issued this policy in reliance upon your representations.

Any error or omission in the description of, or failure to completely describe or disclose any premises, operations or products intended to be covered by the Coverage Form will not invalidate or affect coverage for those premises, operations or products, provided such error or omission or failure to completely describe or disclose premises, operations or products was not intentional.

You must report such error or omission to us as soon as practicable after its discovery. However, this provision does not affect our right to collect additional premium charges or exercise our right of cancellation or nonrenewal.

5. The following is added to paragraph 8. Transfer Of Rights Of Recovery Against Others To Us:

We waive any right of recovery against any person or organization, because of any payment we make under this Coverage Part, to whom the insured has waived its right of recovery in a written contract or agreement. Such waiver by us applies only to the extent that the insured has waived its right of recovery against such person or organization prior to loss.

6. Paragraph 10. is added as follows:

10. Liberalization

If we revise this Coverage Form to provide more coverage without additional premium charge, your policy will automatically provide the additional coverage as of the day the revision is effective in the applicable state(s).

 Includes copyrighted material of the Insurance Services Office, Inc., with its permission.
Copyright 2020 FCCI Insurance Group
Insured Copy

WAIVER OF OUR RIGHT TO RECOVER FROM OTHERS ENDORSEMENT

We have the right to recover our payments from anyone liable for an injury covered by this policy. We will not enforce our right against the person or organization named in the Schedule. (This agreement applies only to the extent that you perform work under a written contract that requires you to obtain this agreement from us.)

This agreement shall not operate directly or indirectly to benefit anyone not named in the Schedule.

Schedule

All persons or organizations that, in a written contract executed by both parties prior to the date of the injury covered by this policy, require you to obtain this agreement from us.

NOTE: This endorsement does not apply to any work completed at job sites located in Kentucky.

This endorsement changes the policy to which it is attached and is effective on the date issued unless otherwise stated.
(The information below is required only when this endorsement is issued subsequent to preparation of the policy.)

Endorsement Effective 07-24-25 Policy No. WC0100103238-00 Endorsement No.

Insured BILL SMITH ELECTRIC INC Premium $ Incl.

Insurance Company FCCI Insurance Company

Countersigned By _____

© 1983 National Council on Compensation Insurance.

Agent Copy

EXHIBIT "C"

PERFORMANCE BOND

Bond No. 101435228

Any singular reference to Contractor, Surety, Owner or other Party shall be considered plural where applicable.

KNOW ALL MEN BY THESE PRESENTS: That the Contractor, Bill Smith Electric, Inc., 1095 Hidden Terrace Drive, Cantonment, FL 32533, hereinafter called the Principal, and Merchants National Bonding, Inc., P.O. BOX 14498, DES MOINES, IA 50306 - 3498, hereinafter called the Surety, are held and firmly bound unto the **City of Mobile, P.O. Box 1827, Mobile, AL 36633**, hereinafter called the Owner, in the penal sum of Two H undred Eighty Eight Thousand One H undred Seventy Five and 00/100 Dollars ($288,175.00) for payment of which we bind ourselves, our heirs, executors, administrators, successors, and assigns for the faithful performance of a certain written Contract dated the 22 day of JUNE, 2026 entered into between the Principal and the City of Mobile for furnishing all labor, material, equipment and insurance and performing all Work required to properly complete Trimmier Park – Lights Upgrades, 3600 Alba Club Road, Mobile, Alabama 36605, PR-068-24, a copy of which said Contract is incorporated herein by reference and is made a part hereof as if fully copied herein.

NOW, THEREFORE, the condition of this obligation is such that if the Principal shall faithfully perform the terms and conditions of the Contract in all respects on its part and shall fully pay all obligations incurred in connection with the performance of such Contract on account of labor and materials used in connection therewith, and all such other obligations of every form, nature and character, and shall save harmless the Owner from all and any liability of every nature, kind and character which may be incurred in connection with the performance or fulfillment of such Contract or other such and liability resulting from negligence or otherwise on the part of such Principal and further save harmless the Owner from all cost and damage which may be suffered by reason of the failure to fully and completely perform said contract and shall fully reimburse and repay the Owner for all expenditures of every kind, character, and description which may be incurred by the Owner in making good any and every default which may exist on the part of the Principal in connection with the performance of said Contract; and further that the Principal shall pay all lawful claims of all persons, firms, partnerships, or corporations for all labor performed and material furnished in connection with the performance of the Contract, and that the failure to do so with such persons, firms, partnerships or corporations shall give them a direct obligation; and provided, however, that no suit, action, or proceedings by reason of any default whatever shall be brought on this bond after two years from the date on which the final payment on the Contract falls due, and provided, further, that if any alterations or additions which may be made under the Contract, or in the work to be done under it, or the giving by the Owner of any extensions of time for the performance of the Contract or any other forbearance being expressly waived. This obligation shall remain in full force and effect until the performance of all covenants, terms and conditions herein stipulated and after such performance, it shall become null and void.

In addition to any other legal mode of service, service of summons, and other process in civil actions brought in Mobile County may be had on the Contractor or the Surety on the bond by leaving a copy of the summons and complaint or other pleading or process with the Mayor of the City of Mobile which shall bind the principal Contractor and Surety to the mode of service above described and that the service shall be the same as personal service on the contractor or surety. This Bond is given pursuant to the terms of Alabama Code, Title 39-1-1, et. al., As Amended.

EXECUTED IN FOUR (4) COUNTERPARTS.

SIGNED, SEALED AND DELIVERED this 22 day of JUNE, 2026.

CONTRACTOR AS PRINCIPAL
Company: Bill Smith Electric, Inc.
(Corporate Seal)

By: _____
(Signature)

Name and Title: MICHAEL C. SMITH, V.P.

SURETY
Company: Merchants National Bonding, Inc.
(Corporate Seal)

By: _____
(Signature)

Name and Title: Mark W. Edwards, II, Attorney-in-Fact

Resident Agent: _____
(Signature)

Name and Title: Mark W. Edwards, II, AL Resident Agent
Company Name: McGriff, a Marsh & McLennan Agency LLC Company
Address: 2000 International Park Drive, Suite 600
Birmingham, AL 35243
Phone and Fax: 205-252-9871

Owner's Representative: Carleen Stout
REAM Director
PO Box 1827
Mobile, AL 36633
251-208-7454

MERCHANTS BONDING COMPANY™

POWER OF ATTORNEY

Know All Persons By These Presents, that MERCHANTS BONDING COMPANY (MUTUAL) and MERCHANTS NATIONAL BONDING, INC., both being corporations of the State of Iowa, d/b/a Merchants National Indemnity Company (in California only) (herein collectively called the "Companies") do hereby make, constitute and appoint, individually,

Alisa B Ferris; Anna Childress; Jeffrey M Wilson; Mark W Edwards II; R E Daniels; Richard H Mitchell; Robert R Freel; Robert Read Davis; Samuel F Audia III; Shelby E Daniels; William M Smith

their true and lawful Attorney(s)-in-Fact, to sign its name as surety(ies) and to execute, seal and acknowledge any and all bonds, undertakings, contracts and other written instruments in the nature thereof, on behalf of the Companies in their business of guaranteeing the fidelity of persons, guaranteeing the performance of contracts and executing or guaranteeing bonds and undertakings required or permitted in any actions or proceedings allowed by law.

This Power-of-Attorney is granted and is signed and sealed by facsimile under and by authority of the following By-Laws adopted by the Board of Directors of Merchants Bonding Company (Mutual) on April 23, 2011 and amended August 14, 2015 and adopted by the Board of Directors of MerchantsNational Bonding, Inc., on October 16, 2015.

"The President, Secretary, Treasurer, or any Assistant Treasurer or any Assistant Secretary or any Vice President shall have power and authority to appoint Attorneys-in-Fact, and to authorize them to execute on behalf of the Company, and attach the seal of the Company thereto, bonds and undertakings, recognizances, contracts of indemnity and other writings obligatory in the nature thereof."

"The signature of any authorized officer and the seal of the Company may be affixed by facsimile or electronic transmission to any Power of Attorney or Certification thereof authorizing the execution and delivery of any bond, undertaking, recognizance, or other suretyship obligations of the Company, and such signature and seal when so used shall have the same force and effect as though manually fixed."

In connection with obligations in favor of the Florida Department of Transportation only, it is agreed that the power and aut hority hereby given to the Attorney-in-Fact includes any and all consents for the release of retained percentages and/or final estimates on engineering and construction contracts required by the State of Florida Department of Transportation. It is fully understood that consenting to the State of Florida Department of Transportation making payment of the final estimate to the Contractor and/or its assignee, shall not relieve this surety company of any of its obligations under its bond.

In connection with obligations in favor of the Kentucky Department of Highways only, it is agreed that the power and authority hereby given to the Attorney-in-Fact cannot be modified or revoked unless prior written personal notice of such intent has been given to the Commissioner-Department of Highways of the Commonwealth of Kentucky at least thirty (30) days prior to the modification or revocation.

In Witness Whereof, the Companies have caused this instrument to be signed and sealed this 4th day of March , 2024 .

MERCHANTS NATIONAL BONDING, INC. -o- 2003

MERCHANTS BONDING COMPANY (MUTUAL) INCORPORATED -o- 1933

MERCHANTS BONDING COMPANY (MUTUAL)
MERCHANTS NATIONAL BONDING, INC.
d/b/a MERCHANTS NATIONAL INDEMNITY COMPANY

By Larry Taylor
President

STATE OF IOWA
COUNTY OF DALLAS ss.

On this 4th day of March 2024 , before me appeared Larry Taylor, to me personally known, who being by me duly sworn did say that he is President of MERCHANTS BONDING COMPANY (MUTUAL) and MERCHANTS NATIONAL BONDING, INC.; and that the seals affixed to the foregoing instrument are the Corporate Seals of the Companies; and that the said instrument was signed and sealed in behalf of the Companies by authority of their respective Boards of Directors.

NOTARIAL SEAL IOWA

Penni Miller
Commission Number 787952
My Commission Expires
January 20, 2027

Notary Public

(Expiration of notary's commission does not invalidate this instrument)

I, William Warner, Jr., Secretary of MERCHANTS BONDING COMPANY (MUTUAL) and MERCHANTS NATIONAL BONDING, INC., do hereby certify that the above and foregoing is a true and correct copy of the POWER-OF-ATTORNEY executed by said Companies, which is still in full force and effect and has not been amended or revoked.

In Witness Whereof, I have hereunto set my hand and affixed the seal of the Companies on this 22 day of JUNE , 2026

MERCHANTS NATIONAL BONDING, INC. -o- 2003

MERCHANTS BONDING COMPANY (MUTUAL) INCORPORATED -o- 1933

William Warner Jr.
Secretary

POA 0018 (1/24)

LABOR AND MATERIAL PAYMENT BOND

Bond No. 101435228

Any singular reference to Contractor, Surety, Owner or other Party shall be considered plural where applicable.

KNOW ALL MEN BY THESE PRESENTS: That the Contractor, Bill Smith Electric, Inc., 1095 Hidden Terrace Drive, Cantonment, FL 32533, as Principal, and Merchants National Bonding, Inc., P.O. Box 14498, DES MOINES, IA 50306 - 3498, as Surety, are held and firmly bound unto the **City of Mobile, P. O. Box 1827, Mobile, AL 36633** (hereinafter called the "Obligee") in the penal sum of Two H undred Eighty Eight Thousand One H undred Seventy Five and 00/100 Dollars ($288,175.00) lawful money of the United States, for the payment of which sum well and truly to be made we bind ourselves, our heirs, personal representatives, successors, and assigns, jointly and severally, firmly by these presents.

WHEREAS, said Principal has entered into a certain Contract with said Obligee, dated the 22 day of JUNE, 2026 (hereinafter called the "Contract") for furnishing all labor, material, equipment and insurance and perform all work required to properly complete Trimmier Park – Lights Upgrades, 3600 Alba Club Road, Mobile, Alabama 36605, PR-068-24, which, **THEREFORE, THE CONDITION OF THIS OBLIGATION IS SUCH** that if said Principal and all subcontractors to whom any portion of work provided for in said Contract is sublet and all assignees of said Principal and of such subcontractors shall promptly make payments to all persons supplying him or them with labor, materials or supplies for or in the prosecution of the work provided for in such Contract, or in any amendment or extension of or additions to said Contract, and for the payment of reasonable attorney's fees, incurred by the claimant or claimants in suits on each bond, then the above obligations shall be void; otherwise to remain in full force and effect. **PROVIDED,** however, that this bond is subject to the following conditions and limitations.

(a) Any person, firm or corporation that has furnished labor, materials or supplies for or in the prosecution of the work provided for in said contract shall have a direct right of action against the Principal and Surety on this bond, which right of action shall be asserted in a proceeding instituted in the County in which the work provided for in said Contract is to be performed or in any county in which said Principal and Surety does business. Such right of action shall be asserted in a proceeding instituted in the name of the claimant or claimants for his or their use and benefit against said Principal and Surety or either of them (but not later than one year after the final settlement of said Contract) in which action such claim or claims shall be adjudicated and judgment rendered thereon.

(b) The Principal and Surety hereby designate and appoint Mark W. Edwards, II, **Attorney-In-Fact,** as the agent of each of them to receive and accept service of process or other pleading issued or filed in any proceeding instituted on this bond and hereby consent that such service shall be the same as personal service on the Principal and/or Surety. In addition to any other legal mode of service, service of summons, and other process in civil actions brought in Mobile County may be had on the Contractor or the Surety on the bond by leaving a copy of the summons and complaint or other pleading or process with the Mayor of the City of Mobile which shall bind the principal Contractor and Surety to the mode of service above described and that the service shall be the same as personal service on the contractor or surety.

(c) The Surety shall not be liable hereunder for damage or compensation recoverable under any Workmen's Compensation or Employer's Liability Statute.

(d) In no event shall the Surety be liable for a greater sum than the penalty of this bond, or subject to any suit, action or proceeding thereon that is instituted later than two years after the final settlement of said Contract.

(e) This bond is given pursuant to the terms of Alabama Code, Title 39-1-1, et. al., As Amended.

EXECUTED IN FOUR (4) COUNTERPARTS.

SIGNED, SEALED AND DELIVERED this 22 day of JUNE, 2026

CONTRACTOR AS PRINCIPAL
Company: Bill Smith Electric, Inc.
(Corporate Seal)
By: _____
(Signature)
Name and Title: MICHAEL C. SMITH, V. P.

SURETY
Company: Merchants National Bonding, Inc.
(Corporate Seal)
By: _____
(Signature)
Name and Title: Mark W. Edwards, II, Attorney-in-Fact

Resident Agent: _____
(Signature)
Name and Title: Mark W. Edwards, AL Resident Agent
Company Name: McGriff, a Marsh & McLennan Agency LLC Company
Address: 2000 International Park Drive, Suite 600
Birmingham, AL 35243
Phone and Fax: 205-252-9871

Owner's Representative: Carleen Stout
REAM Director
PO Box 1827
Mobile, AL 36633
251-208-7454

MERCHANTS BONDING COMPANY™

POWER OF ATTORNEY

Know All Persons By These Presents, that MERCHANTS BONDING COMPANY (MUTUAL) and MERCHANTS NATIONAL BONDING, INC., both being corporations of the State of Iowa, d/b/a Merchants National Indemnity Company (in California only) (herein collectively called the "Companies") do hereby make, constitute and appoint, individually,

Alisa B Ferris; Anna Childress; Jeffrey M Wilson; Mark W Edwards II; R E Daniels; Richard H Mitchell; Robert R Freel; Robert Read Davis; Samuel F Audia III; Shelby E Daniels; William M Smith

their true and lawful Attorney(s)-in-Fact, to sign its name as surety(ies) and to execute, seal and acknowledge any and all bonds, undertakings, contracts and other written instruments in the nature thereof, on behalf of the Companies in their business of guaranteeing the fidelity of persons, guaranteeing the performance of contracts and executing or guaranteeing bonds and undertakings required or permitted in any actions or proceedings allowed by law.

This Power-of-Attorney is granted and is signed and sealed by facsimile under and by authority of the following By-Laws adopted by the Board of Directors of Merchants Bonding Company (Mutual) on April 23, 2011 and amended August 14, 2015 and adopted by the Board of Directors of MerchantsNational Bonding, Inc., on October 16, 2015.

"The President, Secretary, Treasurer, or any Assistant Treasurer or any Assistant Secretary or any Vice President shall have power and authority to appoint Attorneys-in-Fact, and to authorize them to execute on behalf of the Company, and attach the seal of the Company thereto, bonds and undertakings, recognizances, contracts of indemnity and other writings obligatory in the nature thereof."

"The signature of any authorized officer and the seal of the Company may be affixed by facsimile or electronic transmission to any Power of Attorney or Certification thereof authorizing the execution and delivery of any bond, undertaking, recognizance, or other suretyship obligations of the Company, and such signature and seal when so used shall have the same force and effect as though manually fixed."

In connection with obligations in favor of the Florida Department of Transportation only, it is agreed that the power and aut hority hereby given to the Attorney-in-Fact includes any and all consents for the release of retained percentages and/or final estimates on engineering and construction contracts required by the State of Florida Department of Transportation. It is fully understood that consenting to the State of Florida Department of Transportation making payment of the final estimate to the Contractor and/or its assignee, shall not relieve this surety company of any of its obligations under its bond.

In connection with obligations in favor of the Kentucky Department of Highways only, it is agreed that the power and authority hereby given to the Attorney-in-Fact cannot be modified or revoked unless prior written personal notice of such intent has been given to the Commissioner-Department of Highways of the Commonwealth of Kentucky at least thirty (30) days prior to the modification or revocation.

In Witness Whereof, the Companies have caused this instrument to be signed and sealed this 4th day of March , 2024 .

MERCHANTS NATIONAL BONDING, INC. INCORPORATED -o- 2003

MERCHANTS BONDING COMPANY (MUTUAL) INCORPORATED -o- 1933

MERCHANTS BONDING COMPANY (MUTUAL)
MERCHANTS NATIONAL BONDING, INC.
d/b/a MERCHANTS NATIONAL INDEMNITY COMPANY

By Larry Taylor
President

STATE OF IOWA
COUNTY OF DALLAS ss.

On this 4th day of March 2024 , before me appeared Larry Taylor, to me personally known, who being by me duly sworn did say that he is President of MERCHANTS BONDING COMPANY (MUTUAL) and MERCHANTS NATIONAL BONDING, INC.; and that the seals affixed to the foregoing instrument are the Corporate Seals of the Companies; and that the said instrument was signed and sealed in behalf of the Companies by authority of their respective Boards of Directors.

NOTARIAL SEAL IOWA

Penni Miller
Commission Number 787952
My Commission Expires
January 20, 2027

Notary Public

(Expiration of notary's commission does not invalidate this instrument)

I, William Warner, Jr., Secretary of MERCHANTS BONDING COMPANY (MUTUAL) and MERCHANTS NATIONAL BONDING, INC., do hereby certify that the above and foregoing is a true and correct copy of the POWER-OF-ATTORNEY executed by said Companies, which is still in full force and effect and has not been amended or revoked.

In Witness Whereof, I have hereunto set my hand and affixed the seal of the Companies on this 22 day of JUNE , 2026.

MERCHANTS NATIONAL BONDING, INC. INCORPORATED -o- 2003

MERCHANTS BONDING COMPANY (MUTUAL) INCORPORATED -o- 1933

William Warner Jr.
Secretary

POA 0018 (1/24)

STATE OF ALABAMA

BID LIMIT: U

AMOUNT: UNLIMITED

LICENSE NO.: 42331

TYPE: RENEWAL

State Licensing Board for General Contractors

THIS IS TO CERTIFY THAT

BILL SMITH ELECTRIC INC

GONZALEZ, FL 32560

is hereby licensed a General Contractor in the State of Alabama and is authorized to perform the following type(s) of work:

E: ELECTRICAL

until **June 30, 2027** when this Certificate expires.

Witness our hands and seal of the Board, dated Montgomery, Ala.,

27th day of **May, 2026**

229684

Michael B. Tew SECRETARY-TREASURER

CHAIRMAN

EXHIBIT "D"

E-Verify

E-VERIFY IS A SERVICE OF DHS AND SSA

Company ID Number: 1207295

THE E-VERIFY MEMORANDUM OF UNDERSTANDING FOR EMPLOYERS

ARTICLE I
PURPOSE AND AUTHORITY

The parties to this agreement are the Department of Homeland Security (DHS) and Bill Smith Electric, Inc. (Employer). The purpose of this agreement is to set forth terms and conditions which the Employer will follow while participating in E-Verify.

E-Verify is a program that electronically confirms an employee's eligibility to work in the United States after completion of Form I-9, Employment Eligibility Verification (Form I-9). This Memorandum of Understanding (MOU) explains certain features of the E-Verify program and describes specific responsibilities of the Employer, the Social Security Administration (SSA), and DHS.

Authority for the E-Verify program is found in Title IV, Subtitle A, of the Illegal Immigration Reform and Immigrant Responsibility Act of 1996 (IIRIRA), Pub. L. 104-208, 110 Stat. 3009, as amended (8 U.S.C. § 1324a note). The Federal Acquisition Regulation (FAR) Subpart 22.18, "Employment Eligibility Verification" and Executive Order 12989, as amended, provide authority for Federal contractors and subcontractors (Federal contractor) to use E-Verify to verify the employment eligibility of certain employees working on Federal contracts.

ARTICLE II
RESPONSIBILITIES

A. RESPONSIBILITIES OF THE EMPLOYER

1. The Employer agrees to display the following notices supplied by DHS in a prominent place that is clearly visible to prospective employees and all employees who are to be verified through the system:

   a. Notice of E-Verify Participation

   b. Notice of Right to Work

2. The Employer agrees to provide to the SSA and DHS the names, titles, addresses, and telephone numbers of the Employer representatives to be contacted about E-Verify. The Employer also agrees to keep such information current by providing updated information to SSA and DHS whenever the representatives' contact information changes.

3. The Employer agrees to grant E-Verify access only to current employees who need E-Verify access. Employers must promptly terminate an employee's E-Verify access if the employer is separated from the company or no longer needs access to E-Verify.

4. The Employer agrees to become familiar with and comply with the most recent version of the E-Verify User Manual.

5. The Employer agrees that any Employer Representative who will create E-Verify cases will complete the E-Verify Tutorial before that individual creates any cases.

   a. The Employer agrees that all Employer representatives will take the refresher tutorials when prompted by E-Verify in order to continue using E-Verify. Failure to complete a refresher tutorial will prevent the Employer Representative from continued use of E-Verify.

6. The Employer agrees to comply with current Form I-9 procedures, with two exceptions:

   a. If an employee presents a "List B" identity document, the Employer agrees to only accept "List B" documents that contain a photo. (List B documents identified in 8 C.F.R. § 274a.2(b)(1)(B)) can be presented during the Form I-9 process to establish identity.) If an employee objects to the photo requirement for religious reasons, the Employer should contact E-Verify at 888-464-4218.

   b. If an employee presents a DHS Form I-551 (Permanent Resident Card), Form I-766 (Employment Authorization Document), or U.S. Passport or Passport Card to complete Form I-9, the Employer agrees to make a photocopy of the document and to retain the photocopy with the employee's Form I-9. The Employer will use the photocopy to verify the photo and to assist DHS with its review of photo mismatches that employees contest. DHS may in the future designate other documents that activate the photo screening tool.

Note: Subject only to the exceptions noted previously in this paragraph, employees still retain the right to present any List A, or List B and List C, document(s) to complete the Form I-9.

7. The Employer agrees to record the case verification number on the employee's Form I-9 or to print the screen containing the case verification number and attach it to the employee's Form I-9.

8. The Employer agrees that, although it participates in E-Verify, the Employer has a responsibility to complete, retain, and make available for inspection Forms I-9 that relate to its employees, or from other requirements of applicable regulations or laws, including the obligation to comply with the anti-discrimination requirements of section 274B of the INA with respect to Form I-9 procedures.

   a. The following modified requirements are the only exceptions to an Employer's obligation to not employ unauthorized workers and comply with the anti-discrimination provision of the INA: (1) List B identity documents must have photos, as described in paragraph 6 above; (2) When an Employer confirms the identity and employment eligibility of newly hired employee using E-Verify procedures, the Employer establishes a rebuttable presumption that it has not violated section 274A(a)(1)(A) of the Immigration and Nationality Act (INA) with respect to the hiring of that employee; (3) If the Employer receives a final nonconfirmation for an employee, but continues to employ that person, the Employer must notify DHS and the Employer is subject to a civil money penalty between $550 and $1,100 for each failure to notify DHS of continued employment following a final nonconfirmation; (4) If the Employer continues to employ an employee after receiving a final nonconfirmation, then the Employer is subject to a rebuttable presumption that it has knowingly

employed an unauthorized alien in violation of section 274A(a)(1)(A); and (5) no E-Verify participant is civilly or criminally liable under any law for any action taken in good faith based on information provided through the E-Verify.

b. DHS reserves the right to conduct Form I-9 compliance inspections, as well as any other enforcement or compliance activity authorized by law, including site visits, to ensure proper use of E-Verify.

9. The Employer is strictly prohibited from creating an E-Verify case before the employee has been hired, meaning that a firm offer of employment was extended and accepted and Form I-9 was completed. The Employer agrees to create an E-Verify case for new employees within three Employer business days after each employee has been hired (after both Sections 1 and 2 of Form I-9 have been completed), and to complete as many steps of the E-Verify process as are necessary according to the E-Verify User Manual. If E-Verify is temporarily unavailable, the three-day time period will be extended until it is again operational in order to accommodate the Employer's attempting, in good faith, to make inquiries during the period of unavailability.

10. The Employer agrees not to use E-Verify for pre-employment screening of job applicants, in support of any unlawful employment practice, or for any other use that this MOU or the E-Verify User Manual does not authorize.

11. The Employer must use E-Verify for all new employees. The Employer will not verify selectively and will not verify employees hired before the effective date of this MOU. Employers who are Federal contractors may qualify for exceptions to this requirement as described in Article II.B of this MOU.

12. The Employer agrees to follow appropriate procedures (see Article III below) regarding tentative nonconfirmations. The Employer must promptly notify employees in private of the finding and provide them with the notice and letter containing information specific to the employee's E-Verify case. The Employer agrees to provide both the English and the translated notice and letter for employees with limited English proficiency to employees. The Employer agrees to provide written referral instructions to employees and instruct affected employees to bring the English copy of the letter to the SSA. The Employer must allow employees to contest the finding, and not take adverse action against employees if they choose to contest the finding, while their case is still pending. Further, when employees contest a tentative nonconfirmation based upon a photo mismatch, the Employer must take additional steps
(see Article III.B. below) to contact DHS with information necessary to resolve the challenge.

13. The Employer agrees not to take any adverse action against an employee based upon the employee's perceived employment eligibility status while SSA or DHS is processing the verification request unless the Employer obtains knowledge (as defined in 8 C.F.R. § 274a.1(l)) that the employee is not work authorized. The Employer understands that an initial inability of the SSA or DHS automated verification system to verify work authorization, a tentative nonconfirmation, a case in continuance
(indicating the need for additional time for the government to resolve a case), or the finding of a photo mismatch, does not establish, and should not be interpreted as, evidence that the employee is not work authorized. In any of such cases, the employee must be provided a full and fair opportunity to contest the finding, and if he or she does so, the employee may not be terminated or suffer any adverse employment consequences based upon the employee's perceived employment eligibility status

(including denying, reducing, or extending work hours, delaying or preventing training, requiring an employee to work in poorer conditions, withholding pay, refusing to assign the employee to a Federal contract or other assignment, or otherwise assuming that he or she is unauthorized to work) until and unless secondary verification by SSA or DHS has been completed and a final nonconfirmation has been issued. If the employee does not choose to contest a tentative nonconfirmation or a photo mismatch or if a secondary verification is completed and a final nonconfirmation is issued, then the Employer can find the employee is not work authorized and terminate the employee's employment. Employers or employees with questions about a final nonconfirmation may call E-Verify at 1-888-464-4218 (customer service) or 1-888-897-7781 (worker hotline).

14. The Employer agrees to comply with Title VII of the Civil Rights Act of 1964 and section 274B of the INA as applicable by not discriminating unlawfully against any individual in hiring, firing, employment eligibility verification, or recruitment or referral practices because of his or her national origin or citizenship status, or by committing discriminatory documentary practices. The Employer understands that such illegal practices can include selective verification or use of E-Verify except as provided in part D below, or discharging or refusing to hire employees because they appear or sound "foreign" or have received tentative nonconfirmations. The Employer further understands that any violation of the immigration-related unfair employment practices provisions in section 274B of the INA could subject the Employer to civil penalties, back pay awards, and other sanctions, and violations of Title VII could subject the Employer to back pay awards, compensatory and punitive damages. Violations of either section 274B of the INA or Title VII may also lead to the termination of its participation in E-Verify. If the Employer has any questions relating to the anti-discrimination provision, it should contact OSC at 1-800-255-8155 or 1-800-237-2515 (TDD).

15. The Employer agrees that it will use the information it receives from E-Verify only to confirm the employment eligibility of employees as authorized by this MOU. The Employer agrees that it will safeguard this information, and means of access to it (such as PINS and passwords), to ensure that it is not used for any other purpose and as necessary to protect its confidentiality, including ensuring that it is not disseminated to any person other than employees of the Employer who are authorized to perform the Employer's responsibilities under this MOU, except for such dissemination as may be authorized in advance by SSA or DHS for legitimate purposes.

16. The Employer agrees to notify DHS immediately in the event of a breach of personal information. Breaches are defined as loss of control or unauthorized access to E-Verify personal data. All suspected or confirmed breaches should be reported by calling 1-888-464-4218 or via email at E-Verify@uscis.dhs.gov. Please use "Privacy Incident – Password" in the subject line of your email when sending a breach report to E-Verify.

17. The Employer acknowledges that the information it receives from SSA is governed by the Privacy Act (5 U.S.C. § 552a(i)(1) and (3)) and the Social Security Act (42 U.S.C. 1306(a)). Any person who obtains this information under false pretenses or uses it for any purpose other than as provided for in this MOU may be subject to criminal penalties.

18. The Employer agrees to cooperate with DHS and SSA in their compliance monitoring and evaluation of E-Verify, which includes permitting DHS, SSA, their contractors and other agents, upon

reasonable notice, to review Forms I-9 and other employment records and to interview it and its employees regarding the Employer's use of E-Verify, and to respond in a prompt and accurate manner to DHS requests for information relating to their participation in E-Verify.

19. The Employer shall not make any false or unauthorized claims or references about its participation in E-Verify on its website, in advertising materials, or other media. The Employer shall not describe its services as federally-approved, federally-certified, or federally-recognized, or use language with a similar intent on its website or other materials provided to the public. Entering into this MOU does not mean that E-Verify endorses or authorizes your E-Verify services and any claim to that effect is false.

20. The Employer shall not state in its website or other public documents that any language used therein has been provided or approved by DHS, USCIS or the Verification Division, without first obtaining the prior written consent of DHS.

21. The Employer agrees that E-Verify trademarks and logos may be used only under license by DHS/USCIS (see M-795 (Web)) and, other than pursuant to the specific terms of such license, may not be used in any manner that might imply that the Employer's services, products, websites, or publications are sponsored by, endorsed by, licensed by, or affiliated with DHS, USCIS, or E-Verify.

22. The Employer understands that if it uses E-Verify procedures for any purpose other than as authorized by this MOU, the Employer may be subject to appropriate legal action and termination of its participation in E-Verify according to this MOU.

B. RESPONSIBILITIES OF FEDERAL CONTRACTORS

1. If the Employer is a Federal contractor with the FAR E-Verify clause subject to the employment verification terms in Subpart 22.18 of the FAR, it will become familiar with and comply with the most current version of the E-Verify User Manual for Federal Contractors as well as the E-Verify Supplemental Guide for Federal Contractors.

2. In addition to the responsibilities of every employer outlined in this MOU, the Employer understands that if it is a Federal contractor subject to the employment verification terms in Subpart 22.18 of the FAR it must verify the employment eligibility of any "employee assigned to the contract" (as defined in FAR 22.1801). Once an employee has been verified through E-Verify by the Employer, the Employer may not create a second case for the employee through E-Verify.

   a. An Employer that is not enrolled in E-Verify as a Federal contractor at the time of a contract award must enroll as a Federal contractor in the E-Verify program within 30 calendar days of contract award and, within 90 days of enrollment, begin to verify employment eligibility of new hires using E-Verify. The Employer must verify those employees who are working in the United States, whether or not they are assigned to the contract. Once the Employer begins verifying new hires, such verification of new hires must be initiated within three business days after the hire date. Once enrolled in E-Verify as a Federal contractor, the Employer must begin verification of employees assigned to the contract within 90 calendar days after the date of enrollment or within 30 days of an employee's assignment to the contract, whichever date is later.

b. Employers enrolled in E-Verify as a Federal contractor for 90 days or more at the time of a contract award must use E-Verify to begin verification of employment eligibility for new hires of the Employer who are working in the United States, whether or not assigned to the contract, within three business days after the date of hire. If the Employer is enrolled in E-Verify as a Federal contractor for 90 calendar days or less at the time of contract award, the Employer must, within 90 days of enrollment, begin to use E-Verify to initiate verification of new hires of the contractor who are working in the United States, whether or not assigned to the contract. Such verification of new hires must be initiated within three business days after the date of hire. An Employer enrolled as a Federal contractor in E-Verify must begin verification of each employee assigned to the contract within 90 calendar days after date of contract award or within 30 days after assignment to the contract, whichever is later.

c. Federal contractors that are institutions of higher education (as defined at 20 U.S.C. 1001(a)), state or local governments, governments of Federally recognized Indian tribes, or sureties performing under a takeover agreement entered into with a Federal agency under a performance bond may choose to only verify new and existing employees assigned to the Federal contract. Such Federal contractors may, however, elect to verify all new hires, and/or all existing employees hired after November 6, 1986. Employers in this category must begin verification of employees assigned to the contract within 90 calendar days after the date of enrollment or within 30 days of an employee's assignment to the contract, whichever date is later.

d. Upon enrollment, Employers who are Federal contractors may elect to verify employment eligibility of all existing employees working in the United States who were hired after November 6, 1986, instead of verifying only those employees assigned to a covered Federal contract. After enrollment, Employers must elect to verify existing staff following DHS procedures and begin

E-Verify verification of all existing employees within 180 days after the election.

e. The Employer may use a previously completed Form I-9 as the basis for creating an E-Verify case for an employee assigned to a contract as long as:

i. That Form I-9 is complete (including the SSN) and complies with Article II.A.6,

ii. The employee's work authorization has not expired, and

iii. The Employer has reviewed the Form I-9 information either in person or in communications with the employee to ensure that the employee's Section 1, Form I-9 attestation has not changed (including, but not limited to, a lawful permanent resident alien having become a naturalized U.S. citizen).

f. The Employer shall complete a new Form I-9 consistent with Article II.A.6 or update the previous Form I-9 to provide the necessary information if:

i. The Employer cannot determine that Form I-9 complies with Article II.A.6,

ii. The employee's basis for work authorization as attested in Section 1 has expired or changed, or

iii. The Form I-9 contains no SSN or is otherwise incomplete.

Note: If Section 1 of Form I-9 is otherwise valid and up-to-date and the form otherwise complies with

Article II.C.5, but reflects documentation (such as a U.S. passport or Form I-551) that expired after completing Form I-9, the Employer shall not require the production of additional documentation, or use the photo screening tool described in Article II.A.5, subject to any additional or superseding instructions that may be provided on this subject in the E-Verify User Manual.

g. The Employer agrees not to require a second verification using E-Verify of any assigned employee who has previously been verified as a newly hired employee under this MOU or to authorize verification of any existing employee by any Employer that is not a Federal contractor based on this Article.

3. The Employer understands that if it is a Federal contractor, its compliance with this MOU is a performance requirement under the terms of the Federal contract or subcontract, and the Employer consents to the release of information relating to compliance with its verification responsibilities under this MOU to contracting officers or other officials authorized to review the Employer's compliance with Federal contracting requirements.

C. RESPONSIBILITIES OF SSA

1. SSA agrees to allow DHS to compare data provided by the Employer against SSA's database. SSA sends DHS confirmation that the data sent either matches or does not match the information in SSA's database.

2. SSA agrees to safeguard the information the Employer provides through E-Verify procedures. SSA also agrees to limit access to such information, as is appropriate by law, to individuals responsible for the verification of Social Security numbers or responsible for evaluation of E-Verify or such other persons or entities who may be authorized by SSA as governed by the Privacy Act (5 U.S.C. § 552a), the Social Security Act (42 U.S.C. 1306(a)), and SSA regulations (20 CFR Part 401).

3. SSA agrees to provide case results from its database within three Federal Government work days of the initial inquiry. E-Verify provides the information to the Employer.

4. SSA agrees to update SSA records as necessary if the employee who contests the SSA tentative nonconfirmation visits an SSA field office and provides the required evidence. If the employee visits an SSA field office within the eight Federal Government work days from the date of referral to SSA, SSA agrees to update SSA records, if appropriate, within the eight-day period unless SSA determines that more than eight days may be necessary. In such cases, SSA will provide additional instructions to the employee. If the employee does not visit SSA in the time allowed, E-Verify may provide a final nonconfirmation to the employer.

Note: If an Employer experiences technical problems, or has a policy question, the employer should contact E-Verify at 1-888-464-4218.

D. RESPONSIBILITIES OF DHS

1. DHS agrees to provide the Employer with selected data from DHS databases to enable the Employer to conduct, to the extent authorized by this MOU:

a. Automated verification checks on alien employees by electronic means, and

b. Photo verification checks (when available) on employees.

2. DHS agrees to assist the Employer with operational problems associated with the Employer's participation in E-Verify. DHS agrees to provide the Employer names, titles, addresses, and telephone numbers of DHS representatives to be contacted during the E-Verify process.

3. DHS agrees to provide to the Employer with access to E-Verify training materials as well as an E-Verify User Manual that contain instructions on E-Verify policies, procedures, and requirements for both SSA and DHS, including restrictions on the use of E-Verify.

4. DHS agrees to train Employers on all important changes made to E-Verify through the use of mandatory refresher tutorials and updates to the E-Verify User Manual. Even without changes to E-Verify, DHS reserves the right to require employers to take mandatory refresher tutorials.

5. DHS agrees to provide to the Employer a notice, which indicates the Employer's participation in E-Verify. DHS also agrees to provide to the Employer anti-discrimination notices issued by the Office of Special Counsel for Immigration-Related Unfair Employment Practices (OSC), Civil Rights Division, U.S. Department of Justice.

6. DHS agrees to issue each of the Employer's E-Verify users a unique user identification number and password that permits them to log in to E-Verify.

7. DHS agrees to safeguard the information the Employer provides, and to limit access to such information to individuals responsible for the verification process, for evaluation of E-Verify, or to such other persons or entities as may be authorized by applicable law. Information will be used only to verify the accuracy of Social Security numbers and employment eligibility, to enforce the INA and Federal criminal laws, and to administer Federal contracting requirements.

8. DHS agrees to provide a means of automated verification that provides (in conjunction with SSA verification procedures) confirmation or tentative nonconfirmation of employees' employment eligibility within three Federal Government work days of the initial inquiry.

9. DHS agrees to provide a means of secondary verification (including updating DHS records) for employees who contest DHS tentative nonconfirmations and photo mismatch tentative nonconfirmations. This provides final confirmation or nonconfirmation of the employees' employment eligibility within 10 Federal Government work days of the date of referral to DHS, unless DHS determines that more than 10 days may be necessary. In such cases, DHS will provide additional verification instructions.

ARTICLE III
REFERRAL OF INDIVIDUALS TO SSA AND DHS

A. REFERRAL TO SSA

1. If the Employer receives a tentative nonconfirmation issued by SSA, the Employer must print the notice as directed by E-Verify. The Employer must promptly notify employees in private of the finding and provide them with the notice and letter containing information specific to the employee's E-Verify case.

The Employer also agrees to provide both the English and the translated notice and letter for employees with limited English proficiency to employees. The Employer agrees to provide written referral instructions to employees and instruct affected employees to bring the English copy of the letter to the SSA. The Employer must allow employees to contest the finding, and not take adverse action against employees if they choose to contest the finding, while their case is still pending.

2. The Employer agrees to obtain the employee's response about whether he or she will contest the tentative nonconfirmation as soon as possible after the Employer receives the tentative nonconfirmation. Only the employee may determine whether he or she will contest the tentative nonconfirmation.

3. After a tentative nonconfirmation, the Employer will refer employees to SSA field offices only as directed by E-Verify. The Employer must record the case verification number, review the employee information submitted to E-Verify to identify any errors, and find out whether the employee contests the tentative nonconfirmation. The Employer will transmit the Social Security number, or any other corrected employee information that SSA requests, to SSA for verification again if this review indicates a need to do so.

4. The Employer will instruct the employee to visit an SSA office within eight Federal Government work days. SSA will electronically transmit the result of the referral to the Employer within 10 Federal Government work days of the referral unless it determines that more than 10 days is necessary.

5. While waiting for case results, the Employer agrees to check the E-Verify system regularly for case updates.

6. The Employer agrees not to ask the employee to obtain a printout from the Social Security Administration number database (the Numident) or other written verification of the SSN from the SSA.

B. REFERRAL TO DHS

1. If the Employer receives a tentative nonconfirmation issued by DHS, the Employer must promptly notify employees in private of the finding and provide them with the notice and letter containing information specific to the employee's E-Verify case. The Employer also agrees to provide both the English and the translated notice and letter for employees with limited English proficiency to employees. The Employer must allow employees to contest the finding, and not take adverse action against employees if they choose to contest the finding, while their case is still pending.

2. The Employer agrees to obtain the employee's response about whether he or she will contest the tentative nonconfirmation as soon as possible after the Employer receives the tentative nonconfirmation. Only the employee may determine whether he or she will contest the tentative nonconfirmation.

3. The Employer agrees to refer individuals to DHS only when the employee chooses to contest a tentative nonconfirmation.

4. If the employee contests a tentative nonconfirmation issued by DHS, the Employer will instruct the

employee to contact DHS through its toll-free hotline (as found on the referral letter) within eight Federal Government work days.

5. If the Employer finds a photo mismatch, the Employer must provide the photo mismatch tentative nonconfirmation notice and follow the instructions outlined in paragraph 1 of this section for tentative nonconfirmations, generally.

6. The Employer agrees that if an employee contests a tentative nonconfirmation based upon a photo mismatch, the Employer will send a copy of the employee's Form I-551, Form I-766, U.S. Passport, or passport card to DHS for review by:

   a. Scanning and uploading the document, or

   b. Sending a photocopy of the document by express mail (furnished and paid for by the employer).

7. The Employer understands that if it cannot determine whether there is a photo match/mismatch, the Employer must forward the employee's documentation to DHS as described in the preceding paragraph. The Employer agrees to resolve the case as specified by the DHS representative who will determine the photo match or mismatch.

8. DHS will electronically transmit the result of the referral to the Employer within 10 Federal Government work days of the referral unless it determines that more than 10 days is necessary.

9. While waiting for case results, the Employer agrees to check the E-Verify system regularly for case updates.

ARTICLE IV
SERVICE PROVISIONS

A. NO SERVICE FEES

1. SSA and DHS will not charge the Employer for verification services performed under this MOU. The Employer is responsible for providing equipment needed to make inquiries. To access E-Verify, an Employer will need a personal computer with Internet access.

ARTICLE V
MODIFICATION AND TERMINATION

A. MODIFICATION

1. This MOU is effective upon the signature of all parties and shall continue in effect for as long as the SSA and DHS operates the E-Verify program unless modified in writing by the mutual consent of all parties.

2. Any and all E-Verify system enhancements by DHS or SSA, including but not limited to E-Verify checking against additional data sources and instituting new verification policies or procedures, will be covered under this MOU and will not cause the need for a supplemental MOU that outlines these changes.

B. TERMINATION

1. The Employer may terminate this MOU and its participation in E-Verify at any time upon 30 days prior written notice to the other parties.

2. Notwithstanding Article V, part A of this MOU, DHS may terminate this MOU, and thereby the Employer's participation in E-Verify, with or without notice at any time if deemed necessary because of the requirements of law or policy, or upon a determination by SSA or DHS that there has been a breach of system integrity or security by the Employer, or a failure on the part of the Employer to comply with established E-Verify procedures and/or legal requirements. The Employer understands that if it is a Federal contractor, termination of this MOU by any party for any reason may negatively affect the performance of its contractual responsibilities. Similarly, the Employer understands that if it is in a state where E-Verify is mandatory, termination of this by any party MOU may negatively affect the Employer's business.

3. An Employer that is a Federal contractor may terminate this MOU when the Federal contract that requires its participation in E-Verify is terminated or completed. In such cases, the Federal contractor must provide written notice to DHS. If an Employer that is a Federal contractor fails to provide such notice, then that Employer will remain an E-Verify participant, will remain bound by the terms of this MOU that apply to non-Federal contractor participants, and will be required to use the E-Verify procedures to verify the employment eligibility of all newly hired employees.

4. The Employer agrees that E-Verify is not liable for any losses, financial or otherwise, if the Employer is terminated from E-Verify.

ARTICLE VI
PARTIES

A. Some or all SSA and DHS responsibilities under this MOU may be performed by contractor(s), and SSA and DHS may adjust verification responsibilities between each other as necessary. By separate agreement with DHS, SSA has agreed to perform its responsibilities as described in this MOU.

B. Nothing in this MOU is intended, or should be construed, to create any right or benefit, substantive or procedural, enforceable at law by any third party against the United States, its agencies, officers, or employees, or against the Employer, its agents, officers, or employees.

C. The Employer may not assign, directly or indirectly, whether by operation of law, change of control or merger, all or any part of its rights or obligations under this MOU without the prior written consent of DHS, which consent shall not be unreasonably withheld or delayed. Any attempt to sublicense, assign, or transfer any of the rights, duties, or obligations herein is void.

D. Each party shall be solely responsible for defending any claim or action against it arising out of or related to E-Verify or this MOU, whether civil or criminal, and for any liability wherefrom, including (but not limited to) any dispute between the Employer and any other person or entity regarding the applicability of Section 403(d) of IIRIRA to any action taken or allegedly taken by the Employer.

E. The Employer understands that its participation in E-Verify is not confidential information and may be disclosed as authorized or required by law and DHS or SSA policy, including but not limited to, Congressional oversight, E-Verify publicity and media inquiries, determinations of compliance with Federal contractual requirements, and responses to inquiries under the Freedom of Information Act (FOIA).

F. The individuals whose signatures appear below represent that they are authorized to enter into this MOU on behalf of the Employer and DHS respectively. The Employer understands that any inaccurate statement, representation, data or other information provided to DHS may subject the Employer, its subcontractors, its employees, or its representatives to: (1) prosecution for false statements pursuant to 18 U.S.C. 1001 and/or; (2) immediate termination of its MOU and/or; (3) possible debarment or suspension.

G. The foregoing constitutes the full agreement on this subject between DHS and the Employer.

To be accepted as an E-Verify participant, you should only sign the Employer's Section of the signature page. If you have any questions, contact E-Verify at 1-888-464-4218.

E-Verify

E-VERIFY IS A SERVICE OF DHS AND SSA

Company ID Number: 1207295

Approved by:

Employer	
Bill Smith Electric, Inc.	
Name (Please Type or Print) Lisa M Rietz	**Title**
Signature Electronically Signed	**Date** 06/16/2017
Department of Homeland Security – Verification Division	
Name (Please Type or Print) USCIS Verification Division	**Title**
Signature Electronically Signed	**Date** 06/16/2017

E-Verify

E-VERIFY IS A SERVICE OF DHS AND SSA

Company ID Number: 1207295

Information Required for the E-Verify Program Information relating to your Company:	
Company Name	Bill Smith Electric, Inc.
Company Facility Address	1095 Hidden Terrace Dr Cantonment, FL 32533
Company Alternate Address	PO Box 1057 Gonzalez, FL 32560
County or Parish	ESCAMBIA
Employer Identification Number	592320406
North American Industry Classification Systems Code	238
Parent Company	
Number of Employees	20 to 99
Number of Sites Verified for	1 site(s)

E-Verify

E-VERIFY IS A SERVICE OF DHS AND SSA

Company ID Number: 1207295

Are you verifying for more than 1 site? If yes, please provide the number of sites verified for in each State:

FL 1

E-Verify

E-VERIFY IS A SERVICE OF DHS AND SSA

Company ID Number: 1207295

Information relating to the Program Administrator(s) for your Company on policy questions or operational problems:

Name	Lisa M Rietz
Phone Number	8509686500
Fax	8509378113
Email	lisa@billsmithelectric.com

Name	Bryan Harper
Phone Number	8509686500108
Fax	
Email	bryan@billsmithelectric.com

This list represents the first 20 Program Administrators listed for this company.

EXHIBIT "E"

Alabama Secretary of State

SOS Office | Elections | Services | Records | Contact

Bill Smith Electric, Inc.

Entity ID Number	000-928-186
Entity Type	Foreign Corporation
Principal Address	1095 HIDDEN TERRACE DR CANTONMENT, FL 32533
Principal Mailing Address	PO BOX 1057 GONZALEZ, FL 32560
Status	Exists
Place of Formation	Florida
Formation Date	10/31/1985
Qualify Date	09/01/2004
Registered Agent Name	PACIFIC REGISTERED AGENTS, INC.
Registered Office Street Address	181 W. VALLEY AVE., #245 BIRMINGHAM, AL 35209
Registered Office Mailing Address	181 W. VALLEY AVE., #245 BIRMINGHAM, AL 35209
Nature of Business	
Capital Authorized	
Capital Paid In	
Annual Reports	
Report Year	2004 2006 2007 2008 2009 2010 2011 2012 2013 2014 2015 2016 2017 2018 2019 2020 2021 2022 2024
Transactions	
Transaction Date	12/07/2018

Bill Smith Electric, Inc.

Principal Mailing Address Changed From	1095 HIDDEN TERRACE DR CANTONMENT, FL 32533
Transaction Date	12/07/2018
Principal Office Changed From	1707 CHEMSTRAND RD CANTONMENT, FL 32533
Transaction Date	02/08/2021
Agent Mailing Address Changed From	GEWIN, MURFEE EXECUTIVE MESSAGE CENTER 5770-D BELL RD MONTGOMERY, AL 36116
Transaction Date	02/08/2021
Registered Agent Changed From	GEWIN, MURFEE EXECUTIVE MESSAGE CENTER 5770-D BELL RD MONTGOMERY, AL 36116
Transaction Date	12/05/2025
Agent Mailing Address Changed From	PACIFIC REGISTERED AGENTS INC 420 NORTH 20TH STREET STE 2200 BIRMINGHAM, AL 35203
Transaction Date	12/05/2025
Registered Agent Changed From	PACIFIC REGISTERED AGENTS INC 420 NORTH 20TH STREET STE 2200 BIRMINGHAM, AL 35203

Scanned Documents

Purchase Document Copies

Document Date / Type / Pages	09/01/2004 Certificate of Formation 1 pg.
Document Date / Type / Pages	06/12/2018 Articles of Amendment 2 pgs.
Document Date / Type / Pages	12/07/2018 Articles of Amendment 2 pgs.
Document Date / Type / Pages	02/08/2021 Registered Agent Change 2 pgs.
Document Date / Type / Pages	12/05/2025 Registered Agent Change 7 pgs.

Trimmier Park
Lights Upgrades
Mobile, AL
PR-068-24

SECTION 00400

BID FORM

Copies of the following Bid Forms shall be used. Bids submitted on alternate forms may be rejected. Fill in all blank spaces with an appropriate entry. Bid Form must be signed by an officer of the company and notarized.

TO: City of Mobile, 205 Government St., P.O. Box 1827, Mobile, AL, 36633

REF: PROJECT NO.: PR-068-24
PROJECT NAME: Trimmier Park - Lights Upgrades
PROJECT LOCATION: 3600 Alba Club Road
Mobile, Alabama 36605

In compliance with the Bid Documents and having carefully and thoroughly examined said documents for the subject Work prepared by the City of Mobile, Architectural Engineering Department Jaguar Consulting dated May 20, 2026; and all Addendum (a) Number(s) 1, dated May 26, 2026 (CAUTION: before submitting any bid it is the Bidder's responsibility to check with the Architectural Engineering Department for all Addenda or special instructions that may impact the Bid) thereto, receipt of which is hereby acknowledged, the premises and all conditions affecting the Work prior to making this Proposal, the Undersigned Bidder, hereby

COMPANY NAME: Bill Smith Electric, Inc.

ADDRESS: PO Box 1057 Gonzalez, FL 32560 **PHONE** 850-968-6500

ALABAMA GENERAL CONTRACTOR LICENSE NO. 42331

CITY OF MOBILE BUSINESS LICENSE NO. 99050

SECRETARY OF STATE OF ALABAMA BUSINESS IDENTITY NO. 928-186

SECRETARY OF STATE OF ALABAMA ACCOUNT NO. 12652

(Note: Secretary of State Account Number shall be filled in only by non-resident bidders)

(Check one) [✓] A Corporation [ ] A Partnership [ ] An Individual Doing Business

hereby proposes to furnish all labor, materials, tools, equipment, and supplies and to sustain all the expenses incurred in performing the Work on the above captioned Project in accordance with the terms of the Contract Documents, and all applicable laws and regulations for the sum listed below. The initial term of the Contract shall extend for sixty (60) calendar days from the date of the Notice to Proceed.

Trimmier Park
Lights Upgrades
Mobile, AL
PR-068-24

Base Bid: $ 284,100.00

Contingency Allowance: + $ 20,000.00

Total Base Bid: $ 304,100.00
(Fill in here and in Total Bid below)

TOTAL BASE BID: Three Hundred Four Thousand One Hundred and Zero---------- Dollars, ($ 304,100.00)
(Amount in Words) (Amount in Figures)

(Note: Show amount in both words and figures. In case of discrepancy, the amount in words shall govern). **Bids shall be provided in whole dollar amount with no cents.**

CONTINGENCY ALLOWANCE: $20,000.00 lump sum Contingency Allowance shall be included in the Total Bid for work related to unforeseen conditions as approved by the Owner.

BID SECURITY: The undersigned Bidder agrees that the attached Bid Security, as a Cashier's Check drawn on a bank registered to do business in the State of Alabama and which is a member of the Federal Deposit Insurance Corporation, or a Bid Bond, made payable to the City of Mobile, in the amount of 5% of the bid amount, but in no event more than $10,000, as the proper measure of liquidated damages which the City will sustain by the failure of the undersigned to execute the Contract. Said Bid Security shall become the property of the City of Mobile as liquidated damages as specified in the Contract Documents.

AMERICANS WITH DISABILITIES ACT (ADA): The undersigned Bidder agrees to fully comply with all requirements of the Americans with Disabilities Act of 1990 and the Amendment Act.

NONDISCRIMINATION: Contractor shall comply with all Federal, State and local laws concerning nondiscrimination, including but not limited to City of Mobile Ordinance No. 14-034 which requires, *inter alia*, that all contractors performing work for the City of Mobile not discriminate on the basis of race, creed, color, national origin or disability, require that all subcontractors they engage do the same, and make every reasonable effort to assure that fifteen percent of the work performed under contract be awarded to socially and economically disadvantaged individuals and business entities.

SIGNATURE: If the undersigned Bidder is incorporated, the entire legal title of the company followed by "a corporation" should be used. If Bidder is an individual, then that individual's full legal name followed by doing business as (d/b/a) and name of firm, if

BILL SMITH ELECTRIC, INC.
PO BOX 1057, GONZALEZ, FL 32560
OFFICE (850) 968-6500 FAX (850) 937-8113

June 29, 2026

City of Mobile
P. O. Box 1827
Mobile, AL 36633-1827

Attn: Chuck Babin

Re: CIP Trimmier Park Lights Upgrade – PR-068-24
Cost Savings Clarification

Mr. Babin:

In response to your email of 6/29/2026 for further clarification on where the cost savings were taken from our original bid amount, please note that we removed costs associated with the use and operation of the Company owned equipment. Removal of these costs resulted in the savings of approximately $15,925.00 to the City for the above-referenced project.

Best regards,

Bryan F. Harper
General Manager
Bill Smith Electric, Inc.

Lewis, Rhonda

From: Tim Forget <tim@billsmithelectric.com>
Sent: Thursday, June 4, 2026 11:58 AM
To: Babin, Chuck
Cc: Tommy McNicoll
Subject: Trimmier

You don't often get email from tim@billsmithelectric.com. Learn why this is important

CAUTION: This email originated from outside of the organization. Do not click links or open attachments unless you recognize the sender and know the content is safe.

Hi Chuck,

I reviewed my number and skinned a couple things back. I was able to shave it down to $268,175.00 without the allowance. Not sure if this will help reel it in. There is a lot of work on this project, with the wet conditions, (6) deep foundations in poor soils, directional boring, and the new electrical service. The poor/wet soils are the major player on this one.

Feel free to give me a shout to discuss.

Best Regards,

Tim Forget
Project Manager- Estimator
O 850-968-6500
C 251-349-5724

BILL SMITH ELECTRIC

WARNING! WIRE FRAUD ADVISORY: Wire fraud and email hacking/phishing attacks are on the increase! If you receive an email containing Wire Transfer Instructions, DO NOT RESPOND TO THE EMAIL! Instead, call our project manager immediately, using previously known contact information and NOT information provided in the email, to verify the information prior to sending funds.

EXHIBIT "F"

PROJECT MANUAL

FOR

Trimmier Park
Lights Upgrades

3600 Alba Club Road
Mobile, Alabama 36605

Project #PR-068-24

May 20, 2026

City of Mobile
Architectural Engineering Department
205 Government Plaza
P.O. Box 1827
Mobile, Alabama 36633-1827

Bid Date: May 26, 2026

INDEX TO DOCUMENTS

SECTION DOCUMENT NAME

DIVISION 0 BIDDING AND CONTRACT REQUIREMENTS
- Section 00100 Invitation to Bid
- Section 00200 Instructions to Bidders – AIA Documents A701
- Section 00300 Supplementary Instructions to Bidders
- Section 00410 Bid Form
  - Sales Tax Form C-3A
  - Office of Supplier Diversity Subcontracting and Major Supplier Plan
- Section 00500 Standard form of Agreement Between Owner and Contractor – AIA Documents A101 (with Owner's modifications)
- Section 00600 Bonds, Certificates and Affidavits
  - Performance Bond (Owner's modified form)
  - Labor and Material Payment Bond (Owner's modified form)
  - Application and Certificate for Payment – AIA Document G702 and AIA Document G703 with DBE Utilization Report
  - Contractor's Affidavit of Payment of Debts and Claims – AIA Document G706
  - Contractor's Affidavit of Release of Liens – AIA document G706A
  - Consent of Surety to Final Payment – AIA Document G707
  - E-Verify Documentation (Sample)
  - Request for Taxpayer Identification Number and Certification, W-9 Form, and City of Mobile Vendor Information Form
- Section 00700 General Conditions of the Contract for Construction – AIA Documents A201 (with Owner's modifications)

DIVISION 1 GENERAL REQUIREMENTS

- Section 01010 Summary of Work
- Section 01210 Allowances
- Section 01320 Construction Progress Documentation
- Section 01330 Submittal Procedures
- Section 01400 Prequalification's & Construction Quilty Requirements
- Section 01635 Substitution Procedures
- Section 01700 Execution Requirements
- Section 01710 Closeout Procedures
- Section 01731 Cutting and Patching
- Section 017823 Operation and Maintenance Data
- Section 017839 Project Record Documents

DIVISION 2 SITEWORK
DIVISION 3 CONCRETE
DIVISION 4 MASONRY
DIVISION 5 METALS
DIVISION 6 WOOD AND PLASTIC
DIVISION 7 THERMAL AND MOISTURE PROTECTION
DIVISION 8 DOORS AND WINDOWS
DIVISION 9 FINISHES
DIVISION 10 SPECIALTIES
DIVISION 11 EQUIPMENT

DIVISION 12 FURNISHINGS
DIVISION 13 SPECIAL CONSTRUCTION

DRAWINGS:

T101 Title Sheet
E101 Electrical Legend & Abbreviations & Specifications
E201 Electrical Overall Site Plan
E301 Electrical One Line Diagram & Lighting Control Wiring Diagram
E401 Electrical Schedules & Elevations
S-1 Scoreboard Elevations
S-2 Scoreboard Foundation Details

MUSCO LIGHTING PROJECT RELATED DOCUMENTS (*for reference only)*:
Musco Plans
Musco System Requirements: Control System Summary
Musco Control-Link Control and Monitoring Datasheet
Musco Light-Structure System TLC for LED

SECTION 00100
INVITATION TO BID

You are invited to submit a sealed bid for construction of the following facility:

PROJECT NAME:	Trimmier Park – Lights Upgrades
PROJECT LOCATION:	3600 Alba Club Road, Mobile, Alabama 36605
PROJECT NUMBER:	PR-068-24

1 BID DATE:

A. Sealed Bids will be received and clocked in until 2:15 PM local time, Wednesday, the 3rd day of June, 2026. Bidders shall insert sealed Bids into a receptacle, marked "City of Mobile Bids", located in the elevator lobby outside the office of the City Clerk Office, 9th Floor South Tower, Government Plaza, 205 Government Street, Mobile, Alabama 36602.

B. All Bids not clocked in at the City Clerk's Office prior to the time specified, or Bids received after the specified time, will be automatically rejected and returned immediately, unopened.

C. Bids will be publicly opened and read at 2:30 PM local time, in the Atrium Lobby of Government Plaza.

2 SPECIFICATIONS AND DRAWINGS:

A. Specifications and Drawings are on file and may be examined and obtained from the following location: https://www.cityofmobile.org/bids/

B. Bidders shall use complete sets of Bid Documents in preparing their bid. Neither the Owner nor Engineer assumes responsibility for errors or misinterpretations resulting from the use of incomplete sets of Bid Documents.

C. **Addenda will be issued via www.cityofmobile.org/bids/**

D. **This is a tax exempt project and shall be certified by the requirements of the Alabama Department of Revenue. Bidders shall NOT include sales and use taxes with their bid amounts. Bidders shall complete the Sales Tax Form C-3A and include it as an attachment to their Bid Form (see Section 00400).**

BID SURETY: Required on Bids $50,000.00 or more

A. A Cashier's Check drawn on a bank registered to do business in the State of Alabama and which is a member of the Federal Deposit Insurance Corporation, or a Bid Bond payable to Owner, City of Mobile, in the amount of 5% of the Base Bid, but in no event more than $10,000.00 is required to accompany Bid.

B. Bid Bond must be issued by a Surety licensed to do business in the State of Alabama. Bidder shall require the attorney in fact who executes the required bonds on behalf of the surety to affix to the bond a certified and current copy of the power of attorney.

C. No Bid may be modified, withdrawn, or canceled for a period of sixty (60) days after the time designated above for receipt of bids.

D. The City of Mobile will have sixty (60) days from the bid opening date to award contract.

3 SURETY QUALIFICATIONS:

A. A Surety authorized to do business in the State of Alabama must issue Bonds.

B. If the Base Bid is $50,000 or more, the Surety must have a minimum rating of A/Class VI as reported by the latest issue of Best Key Rating Guide Property-Casualty published by Alfred M. Best Company, Inc.

4 IRREGULARITIES AND REJECTION:

A. The City of Mobile reserves the right to waive irregularities in the Bid and in Bidding, and to reject any or all Bids.

5 BIDDER QUALIFICATIONS:

A. Bids for Work costing $50,000 or more must be licensed pursuant to current Alabama law and of classifications compliant with the State of Alabama Licensing Board for General Contractors. Note that if the contract amount is $10,000 or greater, both a Performance Bond and a Labor and Material Payment Bond shall be required. **Before Bidding, Contractor shall verify their license classification of their General Contractors license with the State of Alabama Licensing Board for General Contractors to verify classification is acceptable to perform 51% of the Scope of Work.**

B. In case of a joint venture of two or more Contractors, the amount for the bid shall be within the maximum bid limitations as set by the State of Alabama Licensing Board for General Contractors of at least one of the partners to the joint venture.

6 NON-RESIDENT CONTRACTORS:

A. Except for contracts funded in whole or part with funds received from a federal agency, preference shall be given to resident Contractors on the same basis as the nonresident Contractor’s state awards contracts to Alabama Contractors bidding in similar circumstances.

B. Nonresident Bidders shall, prior to submitting a bid, be registered with the Alabama Secretary of State and the Alabama Department of Revenue. Provide the Secretary of State Business “Entity ID Number” on the Bid Form in the space provided.

7 PRE-BID CONFERENCE:

A. A **MANDATORY** Pre-Bid Conference shall be held on May 26, 2026, **on site, site – 3600 Alba Club Road, Mobile, Alabama 36605 - Football Field**, at 9:00 AM local time. The conference will include a walkthrough of the plans. A representative of the Bidders are required to participate in the MANDATORY Pre-Bid Conference prior to submitting a Bid and include all costs associated with the project in their Bids. A second meeting at the site can be scheduled as necessary but the Contractor is responsible for becoming familiar with the site.

B. Minutes of this conference will be made as an Addendum for the project.

8 BID SUBMITTAL:

A. Bids must be submitted on copies of the Bid Forms furnished in the bidding documents.

B. Bid, with Bid Security, Sales Tax Form C-3A, City of Mobile Subcontracting and Major Supplier Plan and other supporting data specified, shall be contained in a sealed, opaque envelope, approximately 9x12 inches or larger and be marked on the outside with the words **"SEALED BID FOR TRIMMIER PARK – LIGHTS UPGRADES - PROJECT NUMBER: PR-068-24".**

C. The Bid envelope shall be clearly addressed to the Owner as indicated on the Bid Form and include the bid date, the name, address and State License number and classification of the Bidder issued by the State of Alabama Licensing Board for General Contractors.

D. All Bids of $50,000 or more must include the bidder's State of Alabama General Contractor's License information written on the outside of the bid envelope. Any bid submitted without such license information may be rejected and returned to the bidder unopened.

E. In addition, in large letters on both front and back of envelope, write the following: **DO NOT OPEN UNTIL TWO-THIRTY PM, JUNE 3, 2026**.

F. For a bid to be valid it shall be delivered at designated location prior to time and date for receipt of Bids indicated in INVITATION TO BID, or prior to any extension thereof issued to Bidders. After that time no Bid will be received or withdrawn.

G. When sent by mail, preferably special delivery, express service, or registered mail, the sealed Bid, marked as indicated above, shall be enclosed in another envelope for mailing such that the exterior mailing container or envelope may be opened without revealing the contents of the Bid. It is the Contractors responsibility to assure delivery of the bid to the City Clerk's Office prior the time and date established.

9 EQUAL OPPORTUNITY:

A. The City of Mobile, Alabama is an Equal Opportunity Employer and requires that all Contractors comply with the Equal Employment Opportunity laws and the provisions of the Bid Documents in this regard.

B. The City of Mobile also encourages and supports the utilization of Minority Business Enterprises on these and all other publicly solicited Bids, and shall be in compliance with the City of Mobile's Minority Utilization Plan as adopted by the City Council.

C. Contractor shall provide an appropriately completed copy of the "City of Mobile Subcontracting and Major Supplier Plan" in the envelope with their Bid Form. Form shall document DBE Subcontractors participating in the project and, should the total % of DBE participation not meet the 15% minimum, all efforts to obtain DBE Subcontractors shall be documented on or attached to the DBE Form when submitted. During construction, contractors are required to submit a "DBE Utilization Report" with every Pay Application.

D. Contractors should contact the City of Mobile, Supplier Diversity Manager for assistance with DBE Subcontractor information and any questions regarding the DBE Compliance Forms. Contact Archnique Kidd at 251-208-7967.

E. A Directory of DBE Vendors can be found at the following location: https://workwith.cityofmobile.org/

10 ADDITIONAL BIDDING PROCEDURES:

A. Refer to the complete information in the Bid Documents prior to submitting a bid. Additional Bidding Procedure information is contained therein, particularly in the specification Section 00200 “Instructions to Bidders - AIA Document A701” and in the specification Section 00300 “Supplementary Instructions to Bidders”.

12 STATE OF ALABAMA IMMIGRATION ACT

“The State of Alabama, under the Beason-Hammon Alabama Taxpayer and Citizen Protection Act, Act No. 2011-535, Alabama Code Section 31-13-1, et. Seq., requires:

A. That the Contractor shall be enrolled in the E-Verify Program, shall participate in that Program during the performance of the contract, and shall verify the immigration status of every employee who is required to be verified, according to the applicable federal rules and regulations; and

B. That it will attach to the contract the company’s documentation of enrollment in E-Verify.

C. The subcontractor must also enroll in the E-Verify Program prior to performing any work on the contract and shall attach to its sworn affidavit documentation establishing that the subcontractor is enrolled in the E-Verify Program.

13 PUBLIC CONTRACTS WITH ENTITIES ENGAGING IN CERTAIN BOYCOTT ACTIVITIES

A. By signing this contract, Contractor further represents and agrees that it is not currently engaged in, nor will it engage in, any boycott of a person or entity based in or doing business with a jurisdiction with which the State of Alabama can enjoy open trade.

END OF SECTION 00100

AIA® Document A701® – 2018

Instructions to Bidders

for the following Project:
(Name, location, and detailed description)

CIP Trimmier Park Lights Upgrade
3600 Alba Club Road
Mobile, AL 36605
F584-001 UPGRADING THE LIGHTING SYSTEM FOR SAFETY IN THE FOOTBALL FIELD AREA

THE OWNER:
(Name, legal status, address, and other information)

City of Mobile
Real Estate Asset Management Department
P. O. Box 1827
Mobile, AL 36633-1827

THEDESIGN CONSULTANT:
(Name, legal status, address, and other information)

Jaguar Consulting, LLC
8658 Capital Drive North
Mobile, AL 36695
251-307-1037

TABLE OF ARTICLES

1 DEFINITIONS

2 BIDDER'S REPRESENTATIONS

3 BIDDING DOCUMENTS

4 BIDDING PROCEDURES

5 CONSIDERATION OF BIDS

6 POST-BID INFORMATION

7 PERFORMANCE BOND AND PAYMENT BOND

8 ENUMERATION OF THE PROPOSED CONTRACT DOCUMENTS

ADDITIONS AND DELETIONS:
The author of this document may have revised the text of the original AIA standard form. An *Additions and Deletions Report* that notes revisions to the standard form text is available from the author and should be reviewed. A vertical line in the left margin of this document indicates where the author has added to or deleted from the original AIA text.

This document has important legal consequences. Consultation with an attorney is encouraged with respect to its completion or modification.

FEDERAL, STATE, AND LOCAL LAWS MAY IMPOSE REQUIREMENTS ON PUBLIC PROCUREMENT CONTRACTS. CONSULT LOCAL AUTHORITIES OR AN ATTORNEY TO VERIFY REQUIREMENTS APPLICABLE TO THIS PROCUREMENT BEFORE COMPLETING THIS FORM.

It is intended that AIA Document G612™–2017, Owner's Instructions to the Architect, Parts A and B will be completed prior to using this document.

AIA Document A701 – 2018. Copyright © 1970, 1974, 1978, 1987, 1997 and 2018. All rights reserved. "The American Institute of Architects," "American Institute of Architects," "AIA," the AIA Logo, and "AIA Contract Documents" are trademarks of The American Institute of Architects. This document was produced at 18:44:33 CDT on 05/11/2026 under Subscription No.20240042832 which expires on 07/01/2026, is not for resale, is licensed for one-time use only, and may only be used in accordance with the AIA Contract Documents® Terms of Service. To report copyright violations, e-mail docinfo@aiacontracts.com.
User Notes: (6a01fabe3d7c0502ed204dc6)

ARTICLE 1 DEFINITIONS

§ 1.1 Bidding Documents include the Bidding Requirements and the Proposed Contract Documents. The Bidding Requirements consist of the advertisement or invitation to bid, Instructions to Bidders, supplementary instructions to bidders, the bid form, and any other bidding forms. The Proposed Contract Documents consist of the unexecuted form of Agreement between the Owner and Contractor and that Agreement's Exhibits, Conditions of the Contract (General, Supplementary and other Conditions), Drawings, Specifications, all Addenda, and all other documents enumerated in Article 8 of these Instructions.

§ 1.2 Definitions set forth in the General Conditions of the Contract for Construction, or in other Proposed Contract Documents apply to the Bidding Documents.

§ 1.3 Addenda are written or graphic instruments issued by the Architect, which, by additions, deletions, clarifications, or corrections, modify or interpret the Bidding Documents.

§ 1.4 A Bid is a complete and properly executed proposal to do the Work for the sums stipulated therein, submitted in accordance with the Bidding Documents.

§ 1.5 The Base Bid is the sum stated in the Bid for which the Bidder offers to perform the Work described in the Bidding Documents, to which Work may be added or deleted by sums stated in Alternate Bids.

§ 1.6 An Alternate Bid (or Alternate) is an amount stated in the Bid to be added to or deducted from, or that does not change, the Base Bid if the corresponding change in the Work, as described in the Bidding Documents, is accepted.

§ 1.7 A Unit Price is an amount stated in the Bid as a price per unit of measurement for materials, equipment, or services, or a portion of the Work, as described in the Bidding Documents.

§ 1.8 A Bidder is a person or entity who submits a Bid and who meets the requirements set forth in the Bidding Documents.

§ 1.9 A Sub-bidder is a person or entity who submits a bid to a Bidder for materials, equipment, or labor for a portion of the Work.

ARTICLE 2 BIDDER'S REPRESENTATIONS

§ 2.1 By submitting a Bid, the Bidder represents that:

- **.1** the Bidder has read and understands the Bidding Documents;
- **.2** the Bidder understands how the Bidding Documents relate to other portions of the Project, if any, being bid concurrently or presently under construction;
- **.3** the Bid complies with the Bidding Documents;
- **.4** the Bidder has visited the site, become familiar with local conditions under which the Work is to be performed, and has correlated the Bidder's observations with the requirements of the Proposed Contract Documents;
- **.5** the Bid is based upon the materials, equipment, and systems required by the Bidding Documents without exception; and
- **.6** the Bidder has read and understands the provisions for liquidated damages, if any, set forth in the form of Agreement between the Owner and Contractor.

§ 2.2 The Bidder is licensed by the State Licensing Board for General Contractors and the amount Bid does not exceed the Bid Limit stipulated in the Bidder's License and by the City of Mobile.

§ 2.3 Each and every Contractor belonging to or comprising a part of any entity that is bidding as a joint venture or association involving two or more contractors is licensed by the State Licensing Board for General Contractors and that the amount Bid does not exceed the Bid limit stipulated in at least one of their licenses.

§ 2.4 Any non-resident Bidder is authorized by the Secretary of State of Alabama and is registered with Alabama Department of Revenue to transact business in Alabama.**§ 2.5** Joint Ventures or Associations of Contractors, whether the same are Bidders or Subcontractors of Bidders, will remain in existence until all insurance and

AIA Document A701 – 2018. Copyright © 1970, 1974, 1978, 1987, 1997 and 2018. All rights reserved. "The American Institute of Architects," "American Institute of Architects," "AIA," the AIA Logo, and "AIA Contract Documents" are trademarks of The American Institute of Architects. This document was produced at 18:44:33 CDT on 05/11/2026 under Subscription No.20240042832 which expires on 07/01/2026, is not for resale, is licensed for one-time use only, and may only be used in accordance with the AIA Contract Documents® Terms of Service. To report copyright violations, e-mail docinfo@aiacontracts.com.
User Notes: (6a01fabe3d7c0502ed204dc6)

warranty requirement for the Project have been fulfilled.

ARTICLE 3 BIDDING DOCUMENTS

§ 3.1 Distribution

§ 3.1.1 Bidders shall obtain complete Bidding Documents, as indicated below, from the issuing office designated in the advertisement or invitation to bid, for the deposit sum, if any, stated therein.
Bid (Indicate how, such as by email, website, host site/platform, paper copy, or other method Bidders shall obtain Bidding Documents.)

from the City of Mobile Real Estate Asset Management Department as listed in the Invitation to Bid. Management

§ 3.1.2 Any required deposit shall be refunded to Bidders who submit a bona fide Bid and return the paper Bidding Documents in good condition within ten days after receipt of Bids. The cost to replace missing or damaged paper documents will be deducted from the deposit. A Bidder receiving a Contract award may retain the paper Bidding Documents, and the Bidder's deposit will be refunded.

§ 3.1.3 Bidding Documents will not be issued directly to Sub-bidders unless specifically offered in the advertisement or invitation to bid, or in supplementary instructions to bidders.

§ 3.1.4 Bidders shall use complete Bidding Documents in preparing Bids. Neither the Owner nor Architect assumes responsibility for errors or misinterpretations resulting from the use of incomplete Bidding Documents.

§ 3.1.5 The Bidding Documents will be available for the sole purpose of obtaining Bids on the Work. No license or grant of use is conferred by distribution of the Bidding Documents.

§ 3.2 Modification or Interpretation of Bidding Documents

§ 3.2.1 The Bidder shall carefully study the Bidding Documents, shall examine the site and local conditions, and shall notify the Architect of errors, inconsistencies, or ambiguities discovered and request clarification or interpretation pursuant to Section 3.2.2.

§ 3.2.2 Requests for clarification or interpretation of the Bidding Documents shall be submitted by the Bidder in writing and shall be received by the Architect at least five (5) days prior to the date for receipt of Bids.
(Indicate how, such as by email, website, host site/platform, paper copy, or other method Bidders shall submit requests for clarification and interpretation.)

Via email to Design Consultant and City of Mobile Project Manger, at chuck.babin@cityofmobile.gov

§ 3.2.3 Modifications and interpretations of the Bidding Documents shall be made by Addendum. Modifications and interpretations of the Bidding Documents made in any other manner shall not be binding, and Bidders shall not rely upon them.

§ 3.3 Substitutions

§ 3.3.1 The materials, products, and equipment described in the Bidding Documents establish a standard of required function, dimension, appearance, and quality to be met by any proposed substitution.

§ 3.3.2 Substitution Process

§ 3.3.2.1 Written requests for substitutions shall be received by the Architect at least ten days prior to the date for receipt of Bids. Requests shall be submitted in the same manner as that established for submitting clarifications and interpretations in Section 3.2.2.

§ 3.3.2.2 Bidders shall submit substitution requests on a Substitution Request Form if one is provided in the Bidding Documents.

§ 3.3.2.3 If a Substitution Request Form is not provided, requests shall include (1) the name of the material or equipment specified in the Bidding Documents; (2) the reason for the requested substitution; (3) a complete description of the proposed substitution including the name of the material or equipment proposed as the substitute, performance and test data, and relevant drawings; and (4) any other information necessary for an evaluation. The request shall include a statement setting forth changes in other materials, equipment, or other portions of the Work, including changes in the work of other contracts or the impact on any Project Certifications

AIA Document A701 – 2018. Copyright © 1970, 1974, 1978, 1987, 1997 and 2018. All rights reserved. "The American Institute of Architects," "American Institute of Architects," "AIA," the AIA Logo, and "AIA Contract Documents" are trademarks of The American Institute of Architects. This document was produced at 18:44:33 CDT on 05/11/2026 under Subscription No.20240042832 which expires on 07/01/2026, is not for resale, is licensed for one-time use only, and may only be used in accordance with the AIA Contract Documents® Terms of Service. To report copyright violations, e-mail docinfo@aiacontracts.com.
User Notes: (6a01fabe3d7c0502ed204dc6)

(such as LEED), that will result from incorporation of the proposed substitution.

§ 3.3.3 The burden of proof of the merit of the proposed substitution is upon the proposer. The Architect's decision of approval or disapproval of a proposed substitution shall be final.

§ 3.3.4 If the Architect approves a proposed substitution prior to receipt of Bids, such approval shall be set forth in an Addendum. Approvals made in any other manner shall not be binding, and Bidders shall not rely upon them.

§ 3.3.5 No substitutions will be considered after the Contract award unless specifically provided for in the Contract Documents.

§ 3.4 Addenda

§ 3.4.1 Addenda will be transmitted to Bidders known by the issuing office to have received complete Bidding Documents.
(Indicate how, such as by email, website, host site/platform, paper copy, or other method Addenda will be transmitted.)

§ 3.4.2 Addenda will be available where Bidding Documents are on file.

§ 3.4.3 Addenda will be issued no later than four days prior to the date for receipt of Bids, except an Addendum withdrawing the request for Bids or one which includes postponement of the date for receipt of Bids.

§ 3.4.4 Prior to submitting a Bid, each Bidder shall ascertain that the Bidder has received all Addenda issued, and the Bidder shall acknowledge their receipt in the Bid.

ARTICLE 4 BIDDING PROCEDURES

§ 4.1 Preparation of Bids

§ 4.1.1 Bids shall be submitted on the forms included with or identified in the Bidding Documents. No bid will be considered unless made out and submitted on a copy of the Bid Form, Section 00400. Additional Bid Forms will be furnished to prospective Bidders upon request.

§ 4.1.2 All blanks on the bid form shall be legibly executed. Paper bid forms shall be executed in a non-erasable medium.

§ 4.1.3 Sums shall be expressed in both words and numbers, unless noted otherwise on the bid form. In case of discrepancy, the amount entered in words shall govern.

§ 4.1.4 Edits to entries made on paper bid forms must be initialed by the signer of the Bid.

§ 4.1.5 All requested Alternates shall be bid. If no change in the Base Bid is required, enter "No Change" or as required by the bid form.

Unit Prices: Supply requested Unit Prices where shown on the Bid Form, Such Unit Prices shall be used to adjust the Contract Amount where the quantities shown on the Drawings and/or Specifications do not reflect amounts required for completion of the work. Where Completion of the Work requires quantities in excess of those shown on the drawings and specifications, unit prices shall be used to compute an extra payment to the Contractor. Where completion of work required quantities less than those on the Drawings and/or specifications, unit prices shall be used to compute a credit to the Owner.

Contingency Allowance: As shown on the Bid Form, Contractor shall add the amount of the contingency allowance to the Base Bid to derive the Total Bid. The contingency allowance shall cover cost of material, labor, overhead, profit and other expenses for complete installation of items of additional work as required for a complete functional project. The contingency allowance shall be used to fund unforeseen conditions not covered in the construction documents and shall be subject to the provisions of change orders. Upson the completion of work any unused portion of the contingency allowance shall be credited to the Owner by change order.

§ 4.1.6 Where two or more Bids for designated portions of the Work have been requested, the Bidder may, without forfeiture of the bid security, state the Bidder's refusal to accept award of less than the combination of

AIA Document A701 – 2018. Copyright © 1970, 1974, 1978, 1987, 1997 and 2018. All rights reserved. "The American Institute of Architects," "American Institute of Architects," "AIA," the AIA Logo, and "AIA Contract Documents" are trademarks of The American Institute of Architects. This document was produced at 18:44:33 CDT on 05/11/2026 under Subscription No.20240042832 which expires on 07/01/2026, is not for resale, is licensed for one-time use only, and may only be used in accordance with the AIA Contract Documents® Terms of Service. To report copyright violations, e-mail docinfo@aiacontracts.com.
User Notes: (6a01fabe3d7c0502ed204dc6)

Bids stipulated by the Bidder. The Bidder shall neither make additional stipulations on the bid form nor qualify the Bid in any other manner.

§ 4.1.7 Each copy of the Bid shall state the legal name and legal status of the Bidder. As part of the documentation submitted with the Bid, the Bidder shall provide evidence of its legal authority to perform the Work in the jurisdiction where the Project is located. Each copy of the Bid shall be signed by the person or persons legally authorized to bind the Bidder to a contract. A Bid by a corporation shall further name the state of incorporation and have the corporate seal affixed. A Bid submitted by an agent shall have a current power of attorney attached, certifying the agent's authority to bind the Bidder.

§ 4.1.8 A Bidder shall incur all costs associated with the preparation of its Bid.

§ 4.2 Bid Security

§ 4.2.1 Each Bid shall be accompanied by the following bid security:
(Insert the form and amount of bid security.)

The Bidder shall provide a Bid Security in the form of a cashier's check drawn on an Alabama bank or a Bid Bond. Bid Security is required for bids exceeding $50,000.00. Bid Security shall be in the amount of 5% of the TOTAL BID, but in no event more than $10,000.00.

§ 4.2.2 The Bidder pledges to enter into a Contract with the Owner on the terms stated in the Bid and shall, if required, furnish bonds covering the faithful performance of the Contract and payment of all obligations arising thereunder. Should the Bidder refuse to enter into such Contract or fail to furnish such bonds if required, the amount of the bid security shall be forfeited to the Owner as liquidated damages, not as a penalty.

§ 4.2.3 If a surety bond is required as bid security, it shall be written on AIA Document A310™, Bid Bond, unless otherwise provided in the Bidding Documents. The attorney-in-fact who executes the bond on behalf of the surety shall affix to the bond a certified and current copy of an acceptable power of attorney. The Bidder shall provide surety bonds from a company or companies lawfully authorized to issue surety bonds in the jurisdiction where the Project is located.

§ 4.2.4 The Owner will have the right to retain the bid security of Bidders to whom an award is being considered until (a) the Contract has been executed and bonds, if required, have been furnished; (b) the specified time has elapsed so that Bids may be withdrawn; or (c) all Bids have been rejected.

§ 4.2.5 Bonds must be issued by a Surety authorized to do business in the State of Alabama. A Performance Bond and a Labor and Material Payment Bond are required for projects exceeding $10,000.00. If the project cost is $50,000.00 or more, the Surety must have a minimum rating of A/Class VI as reported by the latest issue of Best's Key Rating Guide Property-Casualty published by Alfred M. Best Company, Inc.

§ 4.3 Submission of Bids

§ 4.3.1 A Bidder shall submit its Bid as indicated below:
(Indicate how, such as by website, host site/platform, paper copy, or other method Bidders shall submit their Bid.)

Submission of Bid shall be as stated in Section 00 11 16, Invitation to Bid, Paragraph 9, titled "Bid Submittal".

§ 4.3.2 Paper copies of the Bid, the bid security, and any other documents required to be submitted with the Bid shall be enclosed in a sealed opaque envelope. The envelope shall be addressed to the party receiving the Bids and shall be identified with the Project name, the Bidder's name and address, and, if applicable, the designated portion of the Work for which the Bid is submitted. If the Bid is sent by mail, the sealed envelope shall be enclosed in a separate mailing envelope with the notation "SEALED BID ENCLOSED" on the face thereof.

§ 4.3.3 Bids shall be submitted by the date and time and at the place indicated in the invitation to bid. Bids submitted after the date and time for receipt of Bids, or at an incorrect place, will not be accepted.

§ 4.3.4 The Bidder shall assume full responsibility for timely delivery at the location designated for receipt of Bids.

§ 4.3.5 A Bid submitted by any method other than as provided in this Section 4.3 will not be accepted.

AIA Document A701 – 2018. Copyright © 1970, 1974, 1978, 1987, 1997 and 2018. All rights reserved. "The American Institute of Architects," "American Institute of Architects," "AIA," the AIA Logo, and "AIA Contract Documents" are trademarks of The American Institute of Architects. This document was produced at 18:44:33 CDT on 05/11/2026 under Subscription No.20240042832 which expires on 07/01/2026, is not for resale, is licensed for one-time use only, and may only be used in accordance with the AIA Contract Documents® Terms of Service. To report copyright violations, e-mail docinfo@aiacontracts.com.
User Notes: (6a01fabe3d7c0502ed204dc6)

§ 4.4 Modification or Withdrawal of Bid

§ 4.4.1 Prior to the date and time designated for receipt of Bids, a Bidder may submit a new Bid to replace a Bid previously submitted, or withdraw its Bid entirely, by notice to the party designated to receive the Bids. Such notice shall be received and duly recorded by the receiving party on or before the date and time set for receipt of Bids. The receiving party shall verify that replaced or withdrawn Bids are removed from the other submitted Bids and not considered. Notice of submission of a replacement Bid or withdrawal of a Bid shall be worded so as not to reveal the amount of the original Bid.

§ 4.4.2 Withdrawn Bids may be resubmitted up to the date and time designated for the receipt of Bids in the same format as that established in Section 4.3, provided they fully conform with these Instructions to Bidders. Bid security shall be in an amount sufficient for the Bid as resubmitted.

ARTICLE 5 CONSIDERATION OF BIDS

ARTICLE 5 CONSIDERATION OF BIDS

§ 5.1 Opening of Bids

If stipulated in an advertisement or invitation to bid, or when otherwise required by law, Bids properly identified and received within the specified time limits will be publicly opened and read aloud. A summary of the Bids may be made available to Bidders.

§ 5.2 Rejection of Bids

Unless otherwise prohibited by law, the Owner shall have the right to reject any or all Bids.

§ 5.3 Acceptance of Bid (Award)

§ 5.3.1 It is the intent of the Owner to award a Contract to the lowest responsive and responsible Bidder, provided the Bid has been submitted in accordance with the requirements of the Bidding Documents. Unless otherwise prohibited by law, the Owner shall have the right to waive informalities and irregularities in a Bid received and to accept the Bid which, in the Owner's judgment, is in the Owner's best interests.

§ 5.3.2 Unless otherwise prohibited by law, the Owner shall have the right to accept Alternates in any order or combination, unless otherwise specifically provided in the Bidding Documents, and to determine the lowest responsive and responsible Bidder on the basis of the sum of the Base Bid and Alternates accepted.

ARTICLE 6 POST-BID INFORMATION

§ 6.1 Contractor's Qualification Statement

Bidders to whom award of a Contract is under consideration shall submit to the Architect, upon request and within the timeframe specified by the Architect, a properly executed AIA Document A305™, Contractor's Qualification Statement, unless such a Statement has been previously required and submitted for this Bid.

§ 6.3 Submittals

§ 6.3.1 After notification of selection for the award of the Contract, the Bidder shall, as soon as practicable or as stipulated in the Bidding Documents, submit in writing to the Owner through the Architect:

.1 a designation of the Work to be performed with the Bidder's own forces;

.2 names of the principal products and systems proposed for the Work and the manufacturers and suppliers of each; and

.3 names of persons or entities (including those who are to furnish materials or equipment fabricated to a special design) proposed for the principal portions of the Work.

.4 The name of the Project Superintendent and Project Manager together with the resume of qualifications of each;

.5 Nonresident Contractor shall submit a letter from an attorney as required by Subparagraph 11.1.2 below and;

.6 Engineering Firm or Testing Laboratory for testing as specified.

AIA Document A701 – 2018. Copyright © 1970, 1974, 1978, 1987, 1997 and 2018. All rights reserved. "The American Institute of Architects," "American Institute of Architects," "AIA," the AIA Logo, and "AIA Contract Documents" are trademarks of The American Institute of Architects. This document was produced at 18:44:33 CDT on 05/11/2026 under Subscription No.20240042832 which expires on 07/01/2026, is not for resale, is licensed for one-time use only, and may only be used in accordance with the AIA Contract Documents® Terms of Service. To report copyright violations, e-mail docinfo@aiacontracts.com.
User Notes: (6a01fabe3d7c0502ed204dc6)

§ 6.3.2 The Bidder will be required to establish to the satisfaction of the Architect and Owner the reliability and responsibility of the persons or entities proposed to furnish and perform the Work described in the Bidding Documents.

§ 6.3.3 Prior to the execution of the Contract, the Architect will notify the Bidder if either the Owner or Architect, after due investigation, has reasonable objection to a person or entity proposed by the Bidder. If the Owner or Architect has reasonable objection to a proposed person or entity, the Bidder may, at the Bidder's option, withdraw the Bid or submit an acceptable substitute person or entity. The Bidder may also submit any required adjustment in the Base Bid or Alternate Bid to account for the difference in cost occasioned by such substitution. The Owner may accept the adjusted bid price or disqualify the Bidder. In the event of either withdrawal or disqualification, bid security will not be forfeited.

§ 6.3.4 Persons and entities proposed by the Bidder and to whom the Owner and Architect have made no reasonable objection must be used on the Work for which they were proposed and shall not be changed except with the written consent of the Owner and Architect.

§ 6.3.5 The Contractor shall, within ten (10) calendar days of receiving Contract Forms for signature, furnish to the Owner the following items, along with the signed contract, or the Bid Security will be forfeited automatically without further delay:

.1 A Signed Construction Contract;
.2 Performance Bond and Labor and Material Payment Bond (originals) on all Bids over $10,000.00;
.3 Certificate of Insurance and copy of Builder's Risk Policy (original), as identified in the specifications;
.4 Schedule of Values; and
.5 Federal Immigration Law Compliance: E-Verify enrollment documentation.

§ 6.3.6 The Bid Check or Bond of the three (3) lowest Bidders will not be returned until after the Construction Contract is executed.

ARTICLE 7 PERFORMANCE BOND AND PAYMENT BOND

§ 7.1 Bond Requirements

§ 7.1.1 If stipulated in the Bidding Documents, the Bidder shall furnish bonds covering the faithful performance of the Contract and payment of all obligations arising thereunder.

§ 7.1.2 If the furnishing of such bonds is stipulated in the Bidding Documents, the cost shall be included in the Bid. If the furnishing of such bonds is required after receipt of bids and before execution of the Contract, the cost of such bonds shall be added to the Bid in determining the Contract Sum.

§ 7.1.3 The Bidder shall provide surety bonds from a company or companies lawfully authorized to issue surety bonds in the jurisdiction where the Project is located.

§ 7.1.4 Unless otherwise indicated below, the Penal Sum of the Payment and Performance Bonds shall be the amount of the Contract Sum.
(If Payment or Performance Bonds are to be in an amount other than 100% of the Contract Sum, indicate the dollar amount or percentage of the Contract Sum.)

A Surety authorized to do business in the State of Alabama shall issue Performance Bond and Labor and Material Payment Bond, as required by the Contract Documents. If the project cost is $50,000.00 or more, the Surety must have a minimum rating of A/Class VI as reported by the latest issue of Best's Key Rating Guide Property-Casualty, published by Alfred M. Best Company, Inc.

§ 7.2 Time of Delivery and Form of Bonds

§ 7.2.1 The Bidder shall deliver the required bonds to the Owner not later than ten (10) calendar days from receiving the Construction Contract forms for signature.

§ 7.2.2 The bonds shall be written on City's Performance Bond and Labor and Material Payment Bond forms.

§ 7.2.3 The bonds shall be dated on or after the date of the Contract.

AIA Document A701 – 2018. Copyright © 1970, 1974, 1978, 1987, 1997 and 2018. All rights reserved. "The American Institute of Architects," "American Institute of Architects," "AIA," the AIA Logo, and "AIA Contract Documents" are trademarks of The American Institute of Architects. This document was produced at 18:44:33 CDT on 05/11/2026 under Subscription No.20240042832 which expires on 07/01/2026, is not for resale, is licensed for one-time use only, and may only be used in accordance with the AIA Contract Documents® Terms of Service. To report copyright violations, e-mail docinfo@aiacontracts.com.
User Notes: (6a01fabe3d7c0502ed204dc6)

§ 7.2.4 The Bidder shall require the attorney-in-fact who executes the required bonds on behalf of the surety to affix to the bond a certified and current copy of the power of attorney.

ARTICLE 8 FORM OF AGREEMENT BETWEEN OWNER AND CONTRACTOR

§ 8.1 AIA Document A101, Standard Form of Agreement Between Owner and Contractor where the Basis of Payment is a stipulated sum will be edited electronically and include the standard signatures as required by the City of Mobile.Contract Documents as set forth in the attached sample contract.

ARTICLE 9 NONDISCRIMINATION

§9.1.1 Contractor shall comply with all Federal, State and local laws concerning nondiscrimination, including but not limited to City of Mobile Ordinance No. 14-034 which requires, *inter alia*, that all contractors performing work for the City of Mobile not discriminate on the basis of race, creed, color, national origin or disability, require that all subcontractors they engage do the same, and make every reasonable effort to assure that fifteen percent of the work performed under contract be awarded to socially and economically disadvantaged individuals and business entities.
Contractor shall provide a completed copy of the City of Mobile Subcontracting and Major Supplier Plan with the Bid Form, for bids of $250,000.00 or greater.

ARTICLE 10 USE OF DOMESTIC PRODUCTS

§ 10.1.1 Section 39-3-1 Code of Alabama provides that the Contractor agrees, in the execution of this contract, to use material supplies and products manufactured, mined, processed or otherwise produced in the United States or its territories, if available at reasonable prices, and that breach of this agreement by the Contractor shall result in the assessment of liquidated damages in an amount not less than $500 nor more than 20 percent of the gross amount of the contract price.

§ 10.1.2 Section 39-3-4, Code of Alabama provides that the Contractor for a municipal construction project, financed by the State of Alabama or any political subdivision thereof, is required to use steel produced within the United States.
If the Contractor violates the requirement to use domestic steel, this contract will automatically be revoked and the contractor shall not be entitled to any set-off or recoupment for labor or materials used up to the time of revocation.

ARTICLE 11 PREFERENCE TO RESIDENT CONTRACTORS

§ 11.1.1 Except for contracts funded in whole or in part with funds received from a federal agency, preference shall be given to Alabama resident contractors, and a nonresident bidder domiciled in a state having laws granting preference to local contactors shall be awarded the contracts only on the same basis as a the nonresident bidder's state awards contracts to Alabama contractors bidding under similar circumstances. In the letting of public contracts in which any state, county or municipal funds are utilized, resident contractors in Alabama, be they corporations, individuals or partnerships, are to be granted preference over nonresidents in awarding of contracts in the same manner and to the same extent as provided by the laws of the state of domicile of the nonresident.

§ 11.1.2 A successful nonresident bidder shall include in his post bid submittals a written opinion of an attorney at law licensed to practice law in such nonresident bidders' state of domicile, as to the preferences, if any or none, granted by the law of that state to its own business entities whose principal places of business are in that state in the letting of any or all public contracts.

AIA Document A701 – 2018. Copyright © 1970, 1974, 1978, 1987, 1997 and 2018. All rights reserved. "The American Institute of Architects," "American Institute of Architects," "AIA," the AIA Logo, and "AIA Contract Documents" are trademarks of The American Institute of Architects. This document was produced at 18:44:33 CDT on 05/11/2026 under Subscription No.20240042832 which expires on 07/01/2026, is not for resale, is licensed for one-time use only, and may only be used in accordance with the AIA Contract Documents® Terms of Service. To report copyright violations, e-mail docinfo@aiacontracts.com.
User Notes: (6a01fabe3d7c0502ed204dc6)

ARTICLE 12 PRE-BID REQUIREMENTS

§ 12.1 STATE OF ALABAMA CONTRACTORS LICENSE

§ 12.1.1 If the Project total bid amount is $50,000 or more, a license issued by the State of Alabama Licensing Board
for General Contractors is required prior to submitting a bid and the licensed classification and bid limits must cover the
type of work in this project. See Invitation to Bid, Section 6 “Bidder Qualifications”.

§ 12.2 A NONRESIDENT BIDDER

§ 12.2.1 Every bidder shall be registered with the Department of Revenue prior to bidding and all bidders shall have a
certificate of authorization to do business in Alabama from the Secretary of the State of Alabama. The registration number shall be included on the bid form.

ARTICLE 13 POST-BID REQUIREMENTS

§ 13.1 CITY CONTRACTOR’S LICENSE

13.1.1 A City of Mobile Contractor’s License is required and must be current at the time of bidding. Contractor must
qualify and post $10,000.00 Surety Bond with the Land Use/Code Administration Department before a Contractor’s License will be issued by the Revenue Department. Information on the City Contractor’s License may be obtained by
writing or calling:

BUILD Mobile
P. O. Box 1827
Mobile, Alabama 36633-1827
Phone: 251.208.7421

Revenue Department
P. O. Box 1827
Mobile, Alabama 36633-1827
251.208.7461

13.2 E-VERIFY DOCUMENTATION

§ 13.2.1 The Contractor agrees that it shall comply with all of the requirements of the State of Alabama Immigration
Law (Act. No. 2011-535 as amended by Act. No. 2012-491, Alabama Code (1975) Section 31-13-1, et. Seq., See Section 31-13-9), and the provisions of said Law, including all penalties for violation thereof, orated therein.

13.3 PUBLIC CONTRACTS WITH ENTITIES ENGAGING IN CERTAIN BOYCOTT ACTIVITIES

§ 13.3 The Contractor represents and agrees that it is not currently engaged in, nor will engage in, any boycott of a person or entity based in or doing business with a jurisdiction with which the State of Alabama can enjoy open trade.

END OF SECTION

AIA Document A701 – 2018. Copyright © 1970, 1974, 1978, 1987, 1997 and 2018. All rights reserved. “The American Institute of Architects,” “American Institute of Architects,” “AIA,” the AIA Logo, and “AIA Contract Documents” are trademarks of The American Institute of Architects. This document was produced at 18:44:33 CDT on 05/11/2026 under Subscription No.20240042832 which expires on 07/01/2026, is not for resale, is licensed for one-time use only, and may only be used in accordance with the AIA Contract Documents® Terms of Service. To report copyright violations, e-mail docinfo@aiacontracts.com.
User Notes: (6a01fabe3d7c0502ed204dc6)

SECTION 00200
INSTRUCTIONS TO BIDDERS

PART 1 GENERAL

A. This section includes the INSTRUCTIONS TO BIDDERS, AIA Document A701 to be utilized with the Owner's most recent modifications and which shall be used in conjunction with the entire Bid Documents and Section 00300 SUPPLEMENTARY INSTRUCTIONS TO BIDDERS for this project.

AIA® Document A701® – 2018

Instructions to Bidders

for the following Project:
(Name, location, and detailed description)

CIP Trimmier Park Lights Upgrade
3600 Alba Club Road
Mobile, AL 36605
F584-001 UPGRADING THE LIGHTING SYSTEM FOR SAFETY IN THE FOOTBALL FIELD AREA

THE OWNER:
(Name, legal status, address, and other information)

City of Mobile
Real Estate Asset Management Department
P. O. Box 1827
Mobile, AL 36633-1827

THE DESIGN CONSULTANT:
(Name, legal status, address, and other information)

Jaguar Consulting, LLC
8658 Capital Drive North
Mobile, AL 36695
251-307-1037

TABLE OF ARTICLES

1 DEFINITIONS

2 BIDDER'S REPRESENTATIONS

3 BIDDING DOCUMENTS

4 BIDDING PROCEDURES

5 CONSIDERATION OF BIDS

6 POST-BID INFORMATION

7 PERFORMANCE BOND AND PAYMENT BOND

8 ENUMERATION OF THE PROPOSED CONTRACT DOCUMENTS

ADDITIONS AND DELETIONS:
The author of this document may have revised the text of the original AIA standard form. An *Additions and Deletions Report* that notes revisions to the standard form text is available from the author and should be reviewed. A vertical line in the left margin of this document indicates where the author has added to or deleted from the original AIA text.

This document has important legal consequences. Consultation with an attorney is encouraged with respect to its completion or modification.

FEDERAL, STATE, AND LOCAL LAWS MAY IMPOSE REQUIREMENTS ON PUBLIC PROCUREMENT CONTRACTS. CONSULT LOCAL AUTHORITIES OR AN ATTORNEY TO VERIFY REQUIREMENTS APPLICABLE TO THIS PROCUREMENT BEFORE COMPLETING THIS FORM.

It is intended that AIA Document G612™–2017, Owner's Instructions to the Architect, Parts A and B will be completed prior to using this document.

ELECTRONIC COPYING of any portion of this AIA® Document to another electronic file is prohibited and constitutes a violation of copyright laws as set forth in the footer of this document.

AIA Document A701 – 2018. Copyright © 1970, 1974, 1978, 1987, 1997 and 2018. All rights reserved. "The American Institute of Architects," "American Institute of Architects," "AIA," the AIA Logo, and "AIA Contract Documents" are trademarks of The American Institute of Architects. This draft was produced at 18:33:25 CDT on 05/11/2026 under Subscription No.20240042832 which expires on 07/01/2026, is not for resale, is licensed for one-time use only, and may only be used in accordance with the AIA Contract Documents® Terms of Service. To report copyright violations, e-mail docinfo@aiacontracts.com.
User Notes: (6a01fabe3d7c0502ed204dc6)

ARTICLE 1 DEFINITIONS

§ 1.1 Bidding Documents include the Bidding Requirements and the Proposed Contract Documents. The Bidding Requirements consist of the advertisement or invitation to bid, Instructions to Bidders, supplementary instructions to bidders, the bid form, and any other bidding forms. The Proposed Contract Documents consist of the unexecuted form of Agreement between the Owner and Contractor and that Agreement's Exhibits, Conditions of the Contract (General, Supplementary and other Conditions), Drawings, Specifications, all Addenda, and all other documents enumerated in Article 8 of these Instructions.

§ 1.2 Definitions set forth in the General Conditions of the Contract for Construction, or in other Proposed Contract Documents apply to the Bidding Documents.

§ 1.3 Addenda are written or graphic instruments issued by the Architect, which, by additions, deletions, clarifications, or corrections, modify or interpret the Bidding Documents.

§ 1.4 A Bid is a complete and properly executed proposal to do the Work for the sums stipulated therein, submitted in accordance with the Bidding Documents.

§ 1.5 The Base Bid is the sum stated in the Bid for which the Bidder offers to perform the Work described in the Bidding Documents, to which Work may be added or deleted by sums stated in Alternate Bids.

§ 1.6 An Alternate Bid (or Alternate) is an amount stated in the Bid to be added to or deducted from, or that does not change, the Base Bid if the corresponding change in the Work, as described in the Bidding Documents, is accepted.

§ 1.7 A Unit Price is an amount stated in the Bid as a price per unit of measurement for materials, equipment, or services, or a portion of the Work, as described in the Bidding Documents.

§ 1.8 A Bidder is a person or entity who submits a Bid and who meets the requirements set forth in the Bidding Documents.

§ 1.9 A Sub-bidder is a person or entity who submits a bid to a Bidder for materials, equipment, or labor for a portion of the Work.

ARTICLE 2 BIDDER'S REPRESENTATIONS

§ 2.1 By submitting a Bid, the Bidder represents that:

- **.1** the Bidder has read and understands the Bidding Documents;
- **.2** the Bidder understands how the Bidding Documents relate to other portions of the Project, if any, being bid concurrently or presently under construction;
- **.3** the Bid complies with the Bidding Documents;
- **.4** the Bidder has visited the site, become familiar with local conditions under which the Work is to be performed, and has correlated the Bidder's observations with the requirements of the Proposed Contract Documents;
- **.5** the Bid is based upon the materials, equipment, and systems required by the Bidding Documents without exception; and
- **.6** the Bidder has read and understands the provisions for liquidated damages, if any, set forth in the form of Agreement between the Owner and Contractor.

§ 2.2 The Bidder is licensed by the State Licensing Board for General Contractors and the amount Bid does not exceed the Bid Limit stipulated in the Bidder's License and by the City of Mobile.

§ 2.3 Each and every Contractor belonging to or comprising a part of any entity that is bidding as a joint venture or association involving two or more contractors is licensed by the State Licensing Board for General Contractors and that the amount Bid does not exceed the Bid limit stipulated in at least one of their licenses.

§ 2.4 Any non-resident Bidder is authorized by the Secretary of State of Alabama and is registered with Alabama Department of Revenue to transact business in Alabama.**§ 2.5** Joint Ventures or Associations of Contractors, whether

AIA Document A701 – 2018. Copyright © 1970, 1974, 1978, 1987, 1997 and 2018. All rights reserved. "The American Institute of Architects," "American Institute of Architects," "AIA," the AIA Logo, and "AIA Contract Documents" are trademarks of The American Institute of Architects. This draft was produced at 18:33:25 CDT on 05/11/2026 under Subscription No.20240042832 which expires on 07/01/2026, is not for resale, is licensed for one-time use only, and may only be used in accordance with the AIA Contract Documents® Terms of Service. To report copyright violations, e-mail docinfo@aiacontracts.com.
User Notes: (6a01fabe3d7c0502ed204dc6)

the same are Bidders or Subcontractors of Bidders, will remain in existence until all insurance and warranty requirement for the Project have been fulfilled.

ARTICLE 3 BIDDING DOCUMENTS

§ 3.1 Distribution

§ 3.1.1 Bidders shall obtain complete Bidding Documents, as indicated below, from the issuing office designated in the advertisement or invitation to bid, for the deposit sum, if any, stated therein.
Bid (Indicate how, such as by email, website, host site/platform, paper copy, or other method Bidders shall obtain Bidding Documents.)

from the City of Mobile Real Estate Asset Management Department as listed in the Invitation to Bid. Management

§ 3.1.2 Any required deposit shall be refunded to Bidders who submit a bona fide Bid and return the paper Bidding Documents in good condition within ten days after receipt of Bids. The cost to replace missing or damaged paper documents will be deducted from the deposit. A Bidder receiving a Contract award may retain the paper Bidding Documents, and the Bidder's deposit will be refunded.

§ 3.1.3 Bidding Documents will not be issued directly to Sub-bidders unless specifically offered in the advertisement or invitation to bid, or in supplementary instructions to bidders.

§ 3.1.4 Bidders shall use complete Bidding Documents in preparing Bids. Neither the Owner nor Architect assumes responsibility for errors or misinterpretations resulting from the use of incomplete Bidding Documents.

§ 3.1.5 The Bidding Documents will be available for the sole purpose of obtaining Bids on the Work. No license or grant of use is conferred by distribution of the Bidding Documents.

§ 3.2 Modification or Interpretation of Bidding Documents

§ 3.2.1 The Bidder shall carefully study the Bidding Documents, shall examine the site and local conditions, and shall notify the Architect of errors, inconsistencies, or ambiguities discovered and request clarification or interpretation pursuant to Section 3.2.2.

§ 3.2.2 Requests for clarification or interpretation of the Bidding Documents shall be submitted by the Bidder in writing and shall be received by the Architect at least five (5) days prior to the date for receipt of Bids.
(Indicate how, such as by email, website, host site/platform, paper copy, or other method Bidders shall submit requests for clarification and interpretation.)

Via email to Design Consultant and City of Mobile Project Manger, at chuck.babin@cityofmobile.gov

§ 3.2.3 Modifications and interpretations of the Bidding Documents shall be made by Addendum. Modifications and interpretations of the Bidding Documents made in any other manner shall not be binding, and Bidders shall not rely upon them.

§ 3.3 Substitutions

§ 3.3.1 The materials, products, and equipment described in the Bidding Documents establish a standard of required function, dimension, appearance, and quality to be met by any proposed substitution.

§ 3.3.2 Substitution Process

§ 3.3.2.1 Written requests for substitutions shall be received by the Architect at least ten days prior to the date for receipt of Bids. Requests shall be submitted in the same manner as that established for submitting clarifications and interpretations in Section 3.2.2.

§ 3.3.2.2 Bidders shall submit substitution requests on a Substitution Request Form if one is provided in the Bidding Documents.

§ 3.3.2.3 If a Substitution Request Form is not provided, requests shall include (1) the name of the material or equipment specified in the Bidding Documents; (2) the reason for the requested substitution; (3) a complete description of the proposed substitution including the name of the material or equipment proposed as the substitute, performance and test

AIA Document A701 – 2018. Copyright © 1970, 1974, 1978, 1987, 1997 and 2018. All rights reserved. "The American Institute of Architects," "American Institute of Architects," "AIA," the AIA Logo, and "AIA Contract Documents" are trademarks of The American Institute of Architects. This draft was produced at 18:33:25 CDT on 05/11/2026 under Subscription No.20240042832 which expires on 07/01/2026, is not for resale, is licensed for one-time use only, and may only be used in accordance with the AIA Contract Documents® Terms of Service. To report copyright violations, e-mail docinfo@aiacontracts.com.
User Notes: (6a01fabe3d7c0502ed204dc6)

data, and relevant drawings; and (4) any other information necessary for an evaluation. The request shall include a statement setting forth changes in other materials, equipment, or other portions of the Work, including changes in the work of other contracts or the impact on any Project Certifications (such as LEED), that will result from incorporation of the proposed substitution.

§ 3.3.3 The burden of proof of the merit of the proposed substitution is upon the proposer. The Architect's decision of approval or disapproval of a proposed substitution shall be final.

§ 3.3.4 If the Architect approves a proposed substitution prior to receipt of Bids, such approval shall be set forth in an Addendum. Approvals made in any other manner shall not be binding, and Bidders shall not rely upon them.

§ 3.3.5 No substitutions will be considered after the Contract award unless specifically provided for in the Contract Documents.

§ 3.4 Addenda

§ 3.4.1 Addenda will be transmitted to Bidders known by the issuing office to have received complete Bidding Documents.

(Indicate how, such as by email, website, host site/platform, paper copy, or other method Addenda will be transmitted.)

§ 3.4.2 Addenda will be available where Bidding Documents are on file.

§ 3.4.3 Addenda will be issued no later than four days prior to the date for receipt of Bids, except an Addendum withdrawing the request for Bids or one which includes postponement of the date for receipt of Bids.

§ 3.4.4 Prior to submitting a Bid, each Bidder shall ascertain that the Bidder has received all Addenda issued, and the Bidder shall acknowledge their receipt in the Bid.

ARTICLE 4 BIDDING PROCEDURES

§ 4.1 Preparation of Bids

§ 4.1.1 Bids shall be submitted on the forms included with or identified in the Bidding Documents. No bid will be considered unless made out and submitted on a copy of the Bid Form, Section 00400. Additional Bid Forms will be furnished to prospective Bidders upon request.

§ 4.1.2 All blanks on the bid form shall be legibly executed. Paper bid forms shall be executed in a non-erasable medium.

§ 4.1.3 Sums shall be expressed in both words and numbers, unless noted otherwise on the bid form. In case of discrepancy, the amount entered in words shall govern.

§ 4.1.4 Edits to entries made on paper bid forms must be initialed by the signer of the Bid.

§ 4.1.5 All requested Alternates shall be bid. If no change in the Base Bid is required, enter "No Change" or as required by the bid form.

Unit Prices: Supply requested Unit Prices where shown on the Bid Form, Such Unit Prices shall be used to adjust the Contract Amount where the quantities shown on the Drawings and/or Specifications do not reflect amounts required for completion of the work. Where Completion of the Work requires quantities in excess of those shown on the drawings and specifications, unit prices shall be used to compute an extra payment to the Contractor. Where completion of work required quantities less than those on the Drawings and/or specifications, unit prices shall be used to compute a credit to the Owner.

Contingency Allowance: As shown on the Bid Form, Contractor shall add the amount of the contingency allowance to the Base Bid to derive the Total Bid. The contingency allowance shall cover cost of material, labor, overhead, profit and

AIA Document A701 – 2018. Copyright © 1970, 1974, 1978, 1987, 1997 and 2018. All rights reserved. "The American Institute of Architects," "American Institute of Architects," "AIA," the AIA Logo, and "AIA Contract Documents" are trademarks of The American Institute of Architects. This draft was produced at 18:33:25 CDT on 05/11/2026 under Subscription No.20240042832 which expires on 07/01/2026, is not for resale, is licensed for one-time use only, and may only be used in accordance with the AIA Contract Documents® Terms of Service. To report copyright violations, e-mail docinfo@aiacontracts.com.
User Notes: (6a01fabe3d7c0502ed204dc6)

other expenses for complete installation of items of additional work as required for a complete functional project. The contingency allowance shall be used to fund unforeseen conditions not covered in the construction documents and shall be subject to the provisions of change orders. Upson the completion of work any unused portion of the contingency allowance shall be credited to the Owner by change order.

§ 4.1.6 Where two or more Bids for designated portions of the Work have been requested, the Bidder may, without forfeiture of the bid security, state the Bidder's refusal to accept award of less than the combination of Bids stipulated by the Bidder. The Bidder shall neither make additional stipulations on the bid form nor qualify the Bid in any other manner.

§ 4.1.7 Each copy of the Bid shall state the legal name and legal status of the Bidder. As part of the documentation submitted with the Bid, the Bidder shall provide evidence of its legal authority to perform the Work in the jurisdiction where the Project is located. Each copy of the Bid shall be signed by the person or persons legally authorized to bind the Bidder to a contract. A Bid by a corporation shall further name the state of incorporation and have the corporate seal affixed. A Bid submitted by an agent shall have a current power of attorney attached, certifying the agent's authority to bind the Bidder.

§ 4.1.8 A Bidder shall incur all costs associated with the preparation of its Bid.

§ 4.2 Bid Security

§ 4.2.1 Each Bid shall be accompanied by the following bid security:
(Insert the form and amount of bid security.)

The Bidder shall provide a Bid Security in the form of a cashier's check drawn on an Alabama bank or a Bid Bond. Bid Security is required for bids exceeding $50,000.00. Bid Security shall be in the amount of 5% of the TOTAL BID, but in no event more than $10,000.00.

§ 4.2.2 The Bidder pledges to enter into a Contract with the Owner on the terms stated in the Bid and shall, if required, furnish bonds covering the faithful performance of the Contract and payment of all obligations arising thereunder. Should the Bidder refuse to enter into such Contract or fail to furnish such bonds if required, the amount of the bid security shall be forfeited to the Owner as liquidated damages, not as a penalty.

§ 4.2.3 If a surety bond is required as bid security, it shall be written on AIA Document A310™, Bid Bond, unless otherwise provided in the Bidding Documents. The attorney-in-fact who executes the bond on behalf of the surety shall affix to the bond a certified and current copy of an acceptable power of attorney. The Bidder shall provide surety bonds from a company or companies lawfully authorized to issue surety bonds in the jurisdiction where the Project is located.

§ 4.2.4 The Owner will have the right to retain the bid security of Bidders to whom an award is being considered until (a) the Contract has been executed and bonds, if required, have been furnished; (b) the specified time has elapsed so that Bids may be withdrawn; or (c) all Bids have been rejected.

§ 4.2.5 Bonds must be issued by a Surety authorized to do business in the State of Alabama. A Performance Bond and a Labor and Material Payment Bond are required for projects exceeding $10,000.00. If the project cost is $50,000.00 or more, the Surety must have a minimum rating of A/Class VI as reported by the latest issue of Best's Key Rating Guide Property-Casualty published by Alfred M. Best Company, Inc.

§ 4.3 Submission of Bids

§ 4.3.1 A Bidder shall submit its Bid as indicated below:
(Indicate how, such as by website, host site/platform, paper copy, or other method Bidders shall submit their Bid.)

Submission of Bid shall be as stated in Section 00 11 16, Invitation to Bid, Paragraph 9, titled "Bid Submittal".

§ 4.3.2 Paper copies of the Bid, the bid security, and any other documents required to be submitted with the Bid shall be enclosed in a sealed opaque envelope. The envelope shall be addressed to the party receiving the Bids and shall be identified with the Project name, the Bidder's name and address, and, if applicable, the designated portion of the Work for which the Bid is submitted. If the Bid is sent by mail, the sealed envelope shall be enclosed in a separate mailing

AIA Document A701 – 2018. Copyright © 1970, 1974, 1978, 1987, 1997 and 2018. All rights reserved. "The American Institute of Architects," "American Institute of Architects," "AIA," the AIA Logo, and "AIA Contract Documents" are trademarks of The American Institute of Architects. This draft was produced at 18:33:25 CDT on 05/11/2026 under Subscription No.20240042832 which expires on 07/01/2026, is not for resale, is licensed for one-time use only, and may only be used in accordance with the AIA Contract Documents® Terms of Service. To report copyright violations, e-mail docinfo@aiacontracts.com.
User Notes: (6a01fabe3d7c0502ed204dc6)

envelope with the notation "SEALED BID ENCLOSED" on the face thereof.

§ 4.3.3 Bids shall be submitted by the date and time and at the place indicated in the invitation to bid. Bids submitted after the date and time for receipt of Bids, or at an incorrect place, will not be accepted.

§ 4.3.4 The Bidder shall assume full responsibility for timely delivery at the location designated for receipt of Bids.

§ 4.3.5 A Bid submitted by any method other than as provided in this Section 4.3 will not be accepted.

§ 4.4 Modification or Withdrawal of Bid

§ 4.4.1 Prior to the date and time designated for receipt of Bids, a Bidder may submit a new Bid to replace a Bid previously submitted, or withdraw its Bid entirely, by notice to the party designated to receive the Bids. Such notice shall be received and duly recorded by the receiving party on or before the date and time set for receipt of Bids. The receiving party shall verify that replaced or withdrawn Bids are removed from the other submitted Bids and not considered. Notice of submission of a replacement Bid or withdrawal of a Bid shall be worded so as not to reveal the amount of the original Bid.

§ 4.4.2 Withdrawn Bids may be resubmitted up to the date and time designated for the receipt of Bids in the same format as that established in Section 4.3, provided they fully conform with these Instructions to Bidders. Bid security shall be in an amount sufficient for the Bid as resubmitted.

ARTICLE 5 CONSIDERATION OF BIDS

ARTICLE 5 CONSIDERATION OF BIDS

§ 5.1 Opening of Bids

If stipulated in an advertisement or invitation to bid, or when otherwise required by law, Bids properly identified and received within the specified time limits will be publicly opened and read aloud. A summary of the Bids may be made available to Bidders.

§ 5.2 Rejection of Bids

Unless otherwise prohibited by law, the Owner shall have the right to reject any or all Bids.

§ 5.3 Acceptance of Bid (Award)

§ 5.3.1 It is the intent of the Owner to award a Contract to the lowest responsive and responsible Bidder, provided the Bid has been submitted in accordance with the requirements of the Bidding Documents. Unless otherwise prohibited by law, the Owner shall have the right to waive informalities and irregularities in a Bid received and to accept the Bid which, in the Owner's judgment, is in the Owner's best interests.

§ 5.3.2 Unless otherwise prohibited by law, the Owner shall have the right to accept Alternates in any order or combination, unless otherwise specifically provided in the Bidding Documents, and to determine the lowest responsive and responsible Bidder on the basis of the sum of the Base Bid and Alternates accepted.

ARTICLE 6 POST-BID INFORMATION

§ 6.1 Contractor's Qualification Statement

Bidders to whom award of a Contract is under consideration shall submit to the Architect, upon request and within the timeframe specified by the Architect, a properly executed AIA Document A305™, Contractor's Qualification Statement, unless such a Statement has been previously required and submitted for this Bid.

§ 6.3 Submittals

§ 6.3.1 After notification of selection for the award of the Contract, the Bidder shall, as soon as practicable or as stipulated in the Bidding Documents, submit in writing to the Owner through the Architect:

AIA Document A701 – 2018. Copyright © 1970, 1974, 1978, 1987, 1997 and 2018. All rights reserved. "The American Institute of Architects," "American Institute of Architects," "AIA," the AIA Logo, and "AIA Contract Documents" are trademarks of The American Institute of Architects. This draft was produced at 18:33:25 CDT on 05/11/2026 under Subscription No.20240042832 which expires on 07/01/2026, is not for resale, is licensed for one-time use only, and may only be used in accordance with the AIA Contract Documents® Terms of Service. To report copyright violations, e-mail docinfo@aiacontracts.com.
User Notes: (6a01fabe3d7c0502ed204dc6)

.1 a designation of the Work to be performed with the Bidder's own forces;
.2 names of the principal products and systems proposed for the Work and the manufacturers and suppliers of each; and
.3 names of persons or entities (including those who are to furnish materials or equipment fabricated to a special design) proposed for the principal portions of the Work.
.4 The name of the Project Superintendent and Project Manager together with the resume of qualifications of each;
.5 Nonresident Contractor shall submit a letter from an attorney as required by Subparagraph 11.1.2 below and;
.6 Engineering Firm or Testing Laboratory for testing as specified.

§ 6.3.2 The Bidder will be required to establish to the satisfaction of the Architect and Owner the reliability and responsibility of the persons or entities proposed to furnish and perform the Work described in the Bidding Documents.

§ 6.3.3 Prior to the execution of the Contract, the Architect will notify the Bidder if either the Owner or Architect, after due investigation, has reasonable objection to a person or entity proposed by the Bidder. If the Owner or Architect has reasonable objection to a proposed person or entity, the Bidder may, at the Bidder's option, withdraw the Bid or submit an acceptable substitute person or entity. The Bidder may also submit any required adjustment in the Base Bid or Alternate Bid to account for the difference in cost occasioned by such substitution. The Owner may accept the adjusted bid price or disqualify the Bidder. In the event of either withdrawal or disqualification, bid security will not be forfeited.

§ 6.3.4 Persons and entities proposed by the Bidder and to whom the Owner and Architect have made no reasonable objection must be used on the Work for which they were proposed and shall not be changed except with the written consent of the Owner and Architect.

§ 6.3.5 The Contractor shall, within ten (10) calendar days of receiving Contract Forms for signature, furnish to the Owner the following items, along with the signed contract, or the Bid Security will be forfeited automatically without further delay:

.1 A Signed Construction Contract;
.2 Performance Bond and Labor and Material Payment Bond (originals) on all Bids over $10,000.00;
.3 Certificate of Insurance and copy of Builder's Risk Policy (original), as identified in the specifications;
.4 Schedule of Values; and
.5 Federal Immigration Law Compliance: E-Verify enrollment documentation.

§ 6.3.6 The Bid Check or Bond of the three (3) lowest Bidders will not be returned until after the Construction Contract is executed.

ARTICLE 7 PERFORMANCE BOND AND PAYMENT BOND

§ 7.1 Bond Requirements

§ 7.1.1 If stipulated in the Bidding Documents, the Bidder shall furnish bonds covering the faithful performance of the Contract and payment of all obligations arising thereunder.

§ 7.1.2 If the furnishing of such bonds is stipulated in the Bidding Documents, the cost shall be included in the Bid. If the furnishing of such bonds is required after receipt of bids and before execution of the Contract, the cost of such bonds shall be added to the Bid in determining the Contract Sum.

§ 7.1.3 The Bidder shall provide surety bonds from a company or companies lawfully authorized to issue surety bonds in the jurisdiction where the Project is located.

§ 7.1.4 Unless otherwise indicated below, the Penal Sum of the Payment and Performance Bonds shall be the amount of the Contract Sum.
(If Payment or Performance Bonds are to be in an amount other than 100% of the Contract Sum, indicate the dollar amount or percentage of the Contract Sum.)

A Surety authorized to do business in the State of Alabama shall issue Performance Bond and Labor and Material Payment Bond, as required by the Contract Documents. If the project cost is $50,000.00 or more, the Surety must have a minimum rating of A/Class VI as reported by the latest issue of Best's Key Rating Guide Property-

AIA Document A701 – 2018. Copyright © 1970, 1974, 1978, 1987, 1997 and 2018. All rights reserved. "The American Institute of Architects," "American Institute of Architects," "AIA," the AIA Logo, and "AIA Contract Documents" are trademarks of The American Institute of Architects. This draft was produced at 18:33:25 CDT on 05/11/2026 under Subscription No.20240042832 which expires on 07/01/2026, is not for resale, is licensed for one-time use only, and may only be used in accordance with the AIA Contract Documents® Terms of Service. To report copyright violations, e-mail docinfo@aiacontracts.com.
User Notes: (6a01fabe3d7c0502ed204dc6)

Casualty, published by Alfred M. Best Company, Inc.

§ 7.2 Time of Delivery and Form of Bonds

§ 7.2.1 The Bidder shall deliver the required bonds to the Owner not later than ten (10) calendar days from receiving the Construction Contract forms for signature.

§ 7.2.2 The bonds shall be written on City's Performance Bond and Labor and Material Payment Bond forms.

§ 7.2.3 The bonds shall be dated on or after the date of the Contract.

§ 7.2.4 The Bidder shall require the attorney-in-fact who executes the required bonds on behalf of the surety to affix to the bond a certified and current copy of the power of attorney.

ARTICLE 8 FORM OF AGREEMENT BETWEEN OWNER AND CONTRACTOR

§ 8.1 AIA Document A101, Standard Form of Agreement Between Owner and Contractor where the Basis of Payment is a stipulated sum will be edited electronically and include the standard signatures as required by the City of Mobile. Contract Documents as set forth in the attached sample contract.

ARTICLE 9 NONDISCRIMINATION

§9.1.1 Contractor shall comply with all Federal, State and local laws concerning nondiscrimination, including but not limited to City of Mobile Ordinance No. 14-034 which requires, *inter alia*, that all contractors performing work for the City of Mobile not discriminate on the basis of race, creed, color, national origin or disability, require that all subcontractors they engage do the same, and make every reasonable effort to assure that fifteen percent of the work performed under contract be awarded to socially and economically disadvantaged individuals and business entities. Contractor shall provide a completed copy of the City of Mobile Subcontracting and Major Supplier Plan with the Bid Form, for bids of $250,000.00 or greater.

ARTICLE 10 USE OF DOMESTIC PRODUCTS

§ 10.1.1 Section 39-3-1 Code of Alabama provides that the Contractor agrees, in the execution of this contract, to use material supplies and products manufactured, mined, processed or otherwise produced in the United States or its territories, if available at reasonable prices, and that breach of this agreement by the Contractor shall result in the assessment of liquidated damages in an amount not less than $500 nor more than 20 percent of the gross amount of the contract price.

§ 10.1.2 Section 39-3-4, Code of Alabama provides that the Contractor for a municipal construction project, financed by the State of Alabama or any political subdivision thereof, is required to use steel produced within the United States. If the Contractor violates the requirement to use domestic steel, this contract will automatically be revoked and the contractor shall not be entitled to any set-off or recoupment for labor or materials used up to the time of revocation.

ARTICLE 11 PREFERENCE TO RESIDENT CONTRACTORS

§ 11.1.1 Except for contracts funded in whole or in part with funds received from a federal agency, preference shall be given to Alabama resident contractors, and a nonresident bidder domiciled in a state having laws granting preference to local contactors shall be awarded the contracts only on the same basis as a the nonresident bidder's state awards contracts to Alabama contractors bidding under similar circumstances. In the letting of public contracts in which any state, county or municipal funds are utilized, resident contractors in Alabama, be they corporations, individuals or partnerships, are to be granted preference over nonresidents in awarding of contracts in the same manner and to the same extent as provided by the laws of the state of domicile of the nonresident.

§ 11.1.2 A successful nonresident bidder shall include in his post bid submittals a written opinion of an attorney at law licensed to practice law in such nonresident bidders' state of domicile, as to the preferences, if any or none, granted by the law of that state to its own business entities whose principal places of business are in that state in the letting of any or all public contracts.

ARTICLE 12 PRE-BID REQUIREMENTS

§ 12.1 STATE OF ALABAMA CONTRACTORS LICENSE

§ 12.1.1 If the Project total bid amount is $50,000 or more, a license issued by the State of Alabama Licensing Board for General Contractors is required prior to submitting a bid and the licensed classification and bid limits must cover the

AIA Document A701 – 2018. Copyright © 1970, 1974, 1978, 1987, 1997 and 2018. All rights reserved. "The American Institute of Architects," "American Institute of Architects," "AIA," the AIA Logo, and "AIA Contract Documents" are trademarks of The American Institute of Architects. This draft was produced at 18:33:25 CDT on 05/11/2026 under Subscription No.20240042832 which expires on 07/01/2026, is not for resale, is licensed for one-time use only, and may only be used in accordance with the AIA Contract Documents® Terms of Service. To report copyright violations, e-mail docinfo@aiacontracts.com.
User Notes: (6a01fabe3d7c0502ed204dc6)

type of work in this project. See Invitation to Bid, Section 6 “Bidder Qualifications”.

§ 12.2 A NONRESIDENT BIDDER

§ 12.2.1 Every bidder shall be registered with the Department of Revenue prior to bidding and all bidders shall have a certificate of authorization to do business in Alabama from the Secretary of the State of Alabama. The registration number shall be included on the bid form.

ARTICLE 13 POST-BID REQUIREMENTS

§ 13.1 CITY CONTRACTOR’S LICENSE

13.1.1 A City of Mobile Contractor’s License is required and must be current at the time of bidding. Contractor must qualify and post $10,000.00 Surety Bond with the Land Use/Code Administration Department before a Contractor’s License will be issued by the Revenue Department. Information on the City Contractor’s License may be obtained by writing or calling:

BUILD Mobile
P. O. Box 1827
Mobile, Alabama 36633-1827
Phone: 251.208.7421

Revenue Department
P. O. Box 1827
Mobile, Alabama 36633-1827
251.208.7461

13.2 E-VERIFY DOCUMENTATION

§ 13.2.1 The Contractor agrees that it shall comply with all of the requirements of the State of Alabama Immigration Law (Act. No. 2011-535 as amended by Act. No. 2012-491, Alabama Code (1975) Section 31-13-1, et. Seq., See Section 31-13-9), and the provisions of said Law, including all penalties for violation thereof, orated therein.

13.3 PUBLIC CONTRACTS WITH ENTITIES ENGAGING IN CERTAIN BOYCOTT ACTIVITIES

§ 13.3 The Contractor represents and agrees that it is not currently engaged in, nor will engage in, any boycott of a person or entity based in or doing business with a jurisdiction with which the State of Alabama can enjoy open trade.

END OF SECTION

AIA Document A701 – 2018. Copyright © 1970, 1974, 1978, 1987, 1997 and 2018. All rights reserved. “The American Institute of Architects,” “American Institute of Architects,” “AIA,” the AIA Logo, and “AIA Contract Documents” are trademarks of The American Institute of Architects. This draft was produced at 18:33:25 CDT on 05/11/2026 under Subscription No.20240042832 which expires on 07/01/2026, is not for resale, is licensed for one-time use only, and may only be used in accordance with the AIA Contract Documents® Terms of Service. To report copyright violations, e-mail docinfo@aiacontracts.com.
User Notes: (6a01fabe3d7c0502ed204dc6)

SECTION 00300

SUPPLEMENTARY INSTRUCTIONS TO BIDDERS

THE ATTENTION OF ALL BIDDERS IS CALLED TO THE FOLLOWING INSTRUCTIONS AND CONDITIONS:

1. BIDDING DOCUMENTS:

   A. Bidders may obtain complete sets of Bid Documents and Specifications (Project Manual) from the Department of Architectural Engineering as listed in the Invitation to Bid.

   B. Bidders shall use the complete set of documents in preparing their bid. Neither the City of Mobile nor the Engineer (Architect) assume responsibility for errors or misinterpretations resulting from use of an incomplete set of documents.

2. INTERPRETATION OF BID DOCUMENTS:

   A Bidders shall carefully study and compare the Bidding Documents and compare various components of the Bidding Documents with each other, shall examine the site and local conditions and shall at once report to the Project Manager any errors, inconsistencies or ambiguities discovered.

   B. Bidders requiring clarification or interpretation of the Bidding Documents shall make a written request to the Project Manager by 3:00 PM at least seven (7) calendar days prior to the date for receipt of Bids. E-mail requests are required and should be addressed to chuck.babin@cityofmobile.gov. Interpretations, corrections and changes to the Bidding Documents will be made by a formal, written Addendum. Interpretations, corrections and changes to the Bidding Documents made in any other manner will not be binding, and Bidders shall not rely on them.

   C. Any discrepancy not resolved prior to Bidding shall be bid by the Contractor to provide for the most costly and/or restrictive interpretation of the documents.

3. BIDDING PROCEDURES:

   A No Bid will be considered unless made out and submitted on a copy of the Bid Form as set forth by the Bid Documents.

   B. All blanks on the Bid Form shall be legibly executed in a non-erasable medium.

   C. Sums shall be expressed in both words and figures. In case of discrepancy, the amount written in words shall govern.

   D. Interlineations, alterations and erasures must be initialed by the signer of the Bid.

E. All requested Alternates, Unit Prices and Allowances shall be bid as indicated on the Bid Form and the Bid Documents.

F. Addenda shall be considered as a part of the Bid Documents and those issued prior to the opening of Bids shall be acknowledged on the Bid Form and any adjustment in cost shall be included in the Contract Sum.

4. BID SECURITY:

A. A Cashier's Check drawn on a bank registered to do business in the State of Alabama and which is a member of the Federal Deposit Insurance Corporation, or Bid Bond payable to Owner, City of Mobile, in the amount of 5% of the Base Bid, but in no event more than $10,000.00, must accompany bid. By submitting a Bid Security, the Bidder pledges to enter into a Contract with the City of Mobile on the terms stated in the Bid, and will, if required, furnish bonds covering faithful performance of the Contract and required insurance certificate. Should the Bidder refuse to enter into such Contract or fail to furnish such bonds or insurance or any other required document, the amount of the Bid security shall be forfeited to the Owner as liquidated damages, not as a penalty.

B. Bid Bond shall be valid for a minimum of sixty (60) days from the date of the Bid. The Owner reserves the right to retain the security of all Bidders until the successful Bidder enters into the Contract or until (60) days after Bid opening, whichever is sooner.

C. Bonds must be issued by a Surety licensed to do business in the State of Alabama. If the project cost is more than $50,000.00 the Surety must have a minimum rating of A/Class VI as reported by the latest issue of Best's Key Rating Guide Property-Casualty published by Alfred M. Best Company, Inc.

D. Power of Attorney is required for all Bonds.

E. The Surety company shall be required to execute AIA Document G-707, "Consent of Surety to Final Payment" prior to Final Payment of retainage being made to the Contractor.

5. EXAMINATION OF DOCUMENTS AND SITE WORK:

A. Before submitting a Bid, Bidders should carefully examine the Bid Documents, visit the site of the Work, including attendance at the MANDATORY Pre-Bid conference, fully inform themselves as to existing conditions and limitations, and include in the Bid a sum to cover the cost of all items included in the Contract and necessary to perform the Work. The submission of a Bid will be considered as conclusive evidence that the Bidder has made such examination.

6. SUBMISSION OF BIDS:

A. Bid, with Bid Security, Sales Tax Form C-3A, City of Mobile Subcontracting & Major Supplier Plan and other supporting data specified, shall be contained in a

sealed, opaque envelope, approximately 9 x 12 inches or larger and be marked on the outside with the words "SEALED BID FOR TRIMMIER PARK – LIGHTS UPGRADES: PR-068-24", the Bid Date, and Contractor's name, address, and City of Mobile Business License number. And, if bidding in an amount $50,000 or greater, the State of Alabama General Contractor's License number and classification of the Bidder issued by the State of Alabama Licensing Board for General Contractors shall be written on the envelope.

B. Bids shall be deposited at the designated location prior to the time and date for receipt of Bids. Bids received after the time and date specified in the Invitation to Bid, or as modified by Addendum, will not be considered. Late Bids will be returned to the Bidder unopened.

C. The Bidder shall assume full responsibility for timely delivery at the location designated for receipt of Bids.

D. Oral, telephonic, facsimile or other electronically transmitted bids will not be considered.

7. MODIFICATION OR WITHDRAWAL OF BIDS:

A. A Bid may not be modified, withdrawn, or canceled by the Bidder for a period of sixty (60) days following the time and date designated for receipt of bids, and each Bidder so agrees in submitting a Bid.

8. CONSIDERATION AND AWARD OF BIDS:

A. At the discretion of the City, the properly identified Bids received on time will be publicly opened and will be read aloud.

B. The City shall have the right to reject any and all Bids. A Bid not accompanied by a required Bid security or a Bid which is in any way incomplete or irregular is subject to rejection.

C. It is the intent of the City to award a Contract to the lowest qualified Bidder provided the Bid has been submitted in accordance with the requirements of the Bidding Documents and does not exceed the funds available. The City shall have the right to waive informalities and irregularities in a Bid received and to accept the Bid which, in the City's judgment, is in the City's best interest.

D. The award shall be based on the lowest Total Bid for the Base Bid and any allowances, plus any alternates and/or options that may be accepted, as listed on the Bid Form.

9. PROOF OF COMPETENCY OF BIDDER:

A. Bidders may be required to furnish evidence satisfactory to the City of Mobile that they have sufficient means and experience in the types of work called for to assure the completion of the Contract in a satisfactory manner.

10. SIGNING OF CONTRACT:

A. The Standard Agreement between the City of Mobile and the Contractor, included herein, shall serve as the Agreement between the City and the Contractor.

B. The Bidder to whom the Contract is awarded shall, within ten (10) calendar days of receiving the Contract Forms, properly execute and deliver to the Owner, the following items with the signed Agreement:
   (1). Performance Bond and Labor and Material Payment Bond (originals);
   (2). Certificate of Insurance (original) with endorsements to City of Mobile;
   (3). Evidence of enrollment in the E-Verify program.
   (4). Other documentation as required by the Contract Documents.

C. Failure or refusal to sign the Agreement or to provide Certificates of Insurance in a form satisfactory to the City of Mobile, E-Verify verification, or other required documentation, shall subject the Bidder to immediate forfeiture of Bid Security.

D. On all documents: City of Mobile Business License, the Alabama Secretary of State Business Identity, the Alabama Secretary of State Certificate of Authority (out of state contractors), E-verify documentation, and ACORD Insurance Form, the Contractor's name shall be EXACTLY the same.

11. NONDISCRIMINATION:

A. Contractor shall comply with all Federal, State and local laws concerning nondiscrimination, including but not limited to City of Mobile Ordinance No. 14-034 which requires, inter alia, that all contractors performing work for the City of Mobile not discriminate on the basis of race, creed, color, national origin or disability, require that all subcontractors they engage do the same, and make every reasonable effort to assure that fifteen percent of the work performed under contract be awarded to socially and economically disadvantaged individuals and business entities.

12. AMERICANS WITH DISABILITIES ACT (ADA):

A. Bidders shall comply with the provisions of the Americans with Disabilities Act (ADA) of 1990 which prohibits discrimination against individuals with disabilities.

13. USE OF DOMESTIC PRODUCTS:

A. Section 39-3-1, Alabama Code, 1975, provides that the Contractor agree, in the execution of this Contract, to use materials, supplies and products manufactured, mined, processed or otherwise produced in the United States or its territories, if available at reasonable prices, and that breach of this Agreement by the Contractor shall result in the assessment of liquidated damages in an amount not less than $500.00 nor more than twenty (20) percent of gross amount of the Contract Price.

14. NON-RESIDENT (OUT OF STATE) CONTRACTORS:

A. Preference to Resident Contractors: Section 39-3-5, Code of Alabama, 1975, provides that a non-resident (out of State) bidder domiciled in a state which grants a preference to local Contractors is to be awarded a public contract on the same basis as the non-resident bidder's state awards contracts to Alabama bidders. Alabama bidders are given a preference to the same extent that a non-resident bidder receives a preference in his home state. A non-resident bidder must include with any written bid documents a written opinion of an attorney licensed to practice in the non-resident bidder's state declaring what preferences, if any, exist in the non-resident's state.

B. Certificate of Authority: All non-resident (out of State) bidders shall be registered with the Alabama Secretary of State and the Alabama Department of Revenue prior to submitting a Bid. Provide the Secretary of State Business “Entity ID Number” on the Bid Form in the space provided.

15. ALABAMA IMMIGRATION ACT:

A. The State of Alabama Immigration Law (Act No. 2011-535 as amended by Act No. 2012-491), requires that Contractors not violate federal immigration law or knowingly employ, hire for employment, or continue to employ an unauthorized alien within the State of Alabama. In addition, Contractors are required to enroll in the federal E-Verify program and submit verification of enrollment to the City of Mobile within ten (10) days of receiving the contract forms (see Section 00600).

16. CITY OF MOBILE BUSINESS LICENSE:

A City of Mobile Business License is required and must be current at time of contract award and throughout contract period.

17. CITY OF MOBILE CONTRACTOR’S BUSINESS LICENSE:

A. A City of Mobile Contractor’s Business License is required and must be current when contractor signs the contract and throughout contract period.

B. Contractor must qualify and post a $10,000 surety bond with Build Mobile Permitting before a Contractor's Business License will be issued by the Revenue Department. Information on the City Contractor's License may be obtained by writing or calling:

Build Mobile
P.O. Box 1827
Mobile, Alabama 36633-1827
Phone: 251-208-7421

Revenue Department
P.O. Box 1827
Mobile, Alabama 36633-1827
Phone: 251-208-7461

18. CITY OF MOBILE BUILDING PERMIT:

A. A City of Mobile Building Permit/Electrical Permit/Plumbing Permit/HVAC Permit/Whatever Permit is required and shall be obtained from Build Mobile Permitting Department, but at no cost to the Contractor.

B. Contractor is responsible for ensuring that all inspections are successfully performed in accordance with City of Mobile regulations.

19. CONSTRUCTION SCHEDULE AND ACCESS:

A. The project shall be completed within sixty (60) calendar days from the date indicated by the Notice to Proceed.

B. All fields may remain in use throughout the Construction period, the Contractor is directed to coordinate all areas of work and scheduling of work with the Owner. Contractor shall not enter into the field area for installation. Within five days of the bid opening, the Apparent Low Bidder shall meet with the Owner to discuss Owner scheduling and priorities. Apparent Low Bidder shall then provide a proposed construction schedule within 5 calendar days of the initial meeting for Owner review and approval.

C. The Contractor may be allowed additional construction days due to inclement conditions ("rain days") only as such are appropriately documented and are in excess of the NOAA/National Weather Service average (previous 5 years) for the given month. A "rain day" is defined as more than a "trace" (0.10") of rain falling within a given 24 hour period. The Contractor shall provide documentation and formally request any "rain days" they feel are legitimately due. Documentation shall be submitted to the Project Manager, in writing, within ten (10) calendar days of the rain event. Claim shall include documentation of trades adversely impacted and the impacted activities of each trade.

20. SITE CONSIDERATIONS:

A. It is the Contractor's responsibility to carefully remove and store any items not permanently installed within the work areas. We strongly recommend that the Contractor photograph, videotape or in some manner document any features to be removed and their condition, prior to removal.

B. Noise and strong smells shall be isolated or kept to a minimum when adjacent portions of the site are occupied.

C. Contractor shall be responsible to leave the work area and adjacent site clear of equipment and debris, etc. at the end of each work day. All final cleaning is the responsibility of the Contractor and shall be executed prior to acceptance for reuse of any portion of the site.

D. A dumpster and lay down area for Contractor materials and staging may be located at the site and located per the direction of the Owner. The Contractor is responsible for the removal of the dumpster, any storage containers and any security fencing, temporary erosion control (BMPs), etc. as soon as practical after their use by the Contractor or the work is complete.

21. SALES AND USE TAX EXEMPTION:

A. As per the State of Alabama ACT 2013-205, the Alabama Department of Revenue (ADOR) has been granted the authority to issue a "Certificate of Exemption from Sales and Use Tax for Governmental Entities" on construction projects. Therefore, this project shall qualify for State of Alabama Sales and Use Tax Exemptions under this ACT. It is the responsibility of the Bidder to confirm the potential tax exempt status of their bid with the ADOR and include any such savings in their bid, as well as accounting for same on their bid form attachment Sales Tax Form C-3A.

B. The full text of ACT 2013-205 is available on the State of Alabama Building Commission web-site at www.bc.alabama.gov .

22. SUBMISSION OF LIEN WAIVERS AND DBE COMPLIANCE, UTILIZATION REPORTS:

A. At each monthly Application for Payment submitted to the owner, the Contractor shall provide completed "City of Mobile DBE Compliance, Utilization Reports" and lien waivers, including those from Subcontractors and material suppliers.

23. NOTICE OF COMPLETION:

A. For Contracts $50,000 or greater:
Contractor shall provide proof of publication of Advertisement of Completion for three consecutive weeks in a local newspaper, as required in the Title 39, Section 39-1-1, Subsection (f), of the Code of Alabama. This Advertisement shall not begin until the Project has been accepted by the City of Mobile.

B. Notice of Completion advertisement shall read as follows:

STATE OF ALABAMA

COUNTY OF MOBILE

NOTICE OF COMPLETION
In accordance with Chapter 1, Title 39, Code of Alabama, 1975, NOTICE IS HEREBY given that (COMPANY NAME) has completed the contract for Trimmier Park – Lights Upgrades – PR-068-24, 3600 Alba Club Road, Mobile, Alabama 36605. All persons having any claims for labor, material or otherwise in connection with this project should immediately notify the Architectural Engineering Department, City of Mobile, P.O. Box 1827, Mobile, Alabama 36633-1827.

C. Advertisement shall not begin until the Project has been accepted by the City of Mobile as Substantially Complete.

24. CONTRACTOR WARRANTY AND CERTIFICATION:

A. Upon completion of the contract, the Contractor shall certify under oath that all bills have been paid in full.

B. Contractor shall provide a one year Labor and Materials Warranty on company letterhead in addition to other warranties required by the Bid Documents.

25. LIQUIDATED DAMAGES

A. A time charge equal to Two Hundred Fifty Dollars ($250.00) per calendar day will be made against the Contractor for the entire period that any part of the Work remains uncompleted, or any required closeout documents are not acceptably submitted, for more than thirty (30) calendar days after the time specified for the Substantial Completion for the Work, the amount of which shall be deducted by the owner, and shall be retained by the Owner out of monies otherwise due the Contractor in the final payment, not as a penalty, but as liquidated damages sustained.

END OF SECTION - 00300

SECTION 00400

BID FORM

Copies of the following Bid Forms shall be used. Bids submitted on alternate forms may be rejected. Fill in all blank spaces with an appropriate entry. Bid Form must be signed by an officer of the company and notarized.

TO: City of Mobile, 205 Government St., P.O. Box 1827, Mobile, AL, 36633

REF: PROJECT NO.: PR-068-24
PROJECT NAME: Trimmier Park - Lights Upgrades
PROJECT LOCATION: 3600 Alba Club Road
Mobile, Alabama 36605

In compliance with the Bid Documents and having carefully and thoroughly examined said documents for the subject Work prepared by the City of Mobile, Architectural Engineering Department Jaguar Consulting dated May 20, 2026; and all Addendum (a) Number(s) _____, dated _____, 2026 (CAUTION: before submitting any bid it is the Bidder's responsibility to check with the Architectural Engineering Department for all Addenda or special instructions that may impact the Bid) thereto, receipt of which is hereby acknowledged, the premises and all conditions affecting the Work prior to making this Proposal, the Undersigned Bidder, hereby

COMPANY NAME:_____

ADDRESS:_____PHONE_____

ALABAMA GENERAL CONTRACTOR LICENSE NO. _____

CITY OF MOBILE BUSINESS LICENSE NO._____

SECRETARY OF STATE OF ALABAMA BUSINESS IDENTITY NO._____

SECRETARY OF STATE OF ALABAMA ACCOUNT NO._____

(Note: Secretary of State Account Number shall be filled in only by non-resident bidders)

(Check one) [ ] A Corporation [ ] A Partnership [ ] An Individual Doing Business

hereby proposes to furnish all labor, materials, tools, equipment, and supplies and to sustain all the expenses incurred in performing the Work on the above captioned Project in accordance with the terms of the Contract Documents, and all applicable laws and regulations for the sum listed below. The initial term of the Contract shall extend for sixty (60) calendar days from the date of the Notice to Proceed.

Base Bid: $_____.00

Contingency Allowance: + $ 20,000.00

Total Base Bid: $_____.00
(Fill in here and in Total Bid below)

TOTAL BASE BID: _____

_____ Dollars, ($ _____.00)
(Amount in Words) (Amount in Figures)

(Note: Show amount in both words and figures. In case of discrepancy, the amount in words shall govern). **Bids shall be provided in whole dollar amount with no cents.**

CONTINGENCY ALLOWANCE: $20,000.00 lump sum Contingency Allowance shall be included in the Total Bid for work related to unforeseen conditions as approved by the Owner.

BID SECURITY: The undersigned Bidder agrees that the attached Bid Security, as a Cashier's Check drawn on a bank registered to do business in the State of Alabama and which is a member of the Federal Deposit Insurance Corporation, or a Bid Bond, made payable to the City of Mobile, in the amount of 5% of the bid amount, but in no event more than $10,000, as the proper measure of liquidated damages which the City will sustain by the failure of the undersigned to execute the Contract. Said Bid Security shall become the property of the City of Mobile as liquidated damages as specified in the Contract Documents.

AMERICANS WITH DISABILITIES ACT (ADA): The undersigned Bidder agrees to fully comply with all requirements of the Americans with Disabilities Act of 1990 and the Amendment Act.

NONDISCRIMINATION: Contractor shall comply with all Federal, State and local laws concerning nondiscrimination, including but not limited to City of Mobile Ordinance No. 14-034 which requires, *inter alia*, that all contractors performing work for the City of Mobile not discriminate on the basis of race, creed, color, national origin or disability, require that all subcontractors they engage do the same, and make every reasonable effort to assure that fifteen percent of the work performed under contract be awarded to socially and economically disadvantaged individuals and business entities.

SIGNATURE: If the undersigned Bidder is incorporated, the entire legal title of the company followed by "a corporation" should be used. If Bidder is an individual, then that individual's full legal name followed by doing business as (d/b/a) and name of firm, if

any, should be used. If Bidder is a partnership, then full name of each partner should be listed followed by "d/b/a" and name of firm, if any.

Ensure that name and exact arrangement thereof is the same on all forms submitted with this Bid. If a word is abbreviated in the official company name, such as "Co.", then use that abbreviation. If not abbreviated in the official name, spell out.

Bidder agrees not to revoke or withdraw this Bid until sixty (60) calendar days following the time and date for receipt of bids. If notified in writing of the acceptance of this Bid within this time period, Bidder agrees to execute a Contract based on this Bid on the proscribed form within ten (10) calendar days of said notification and to furnish Performance Bond and Materials and Payment Bond as specified.

COMPANY NAME:_____
(Printed or Typed)

BY:_____
(Signature of Company Officer)

COMPANY OFFICER:_____
(Printed or Typed)

TITLE_____ **DATE**_____**, 2025**
(Printed or Typed)

Sworn to and subscribed before me this _____ day of _____2025

_____
Notary Public

Attachments:
1. Bid Security, with Power of Attorney
2. Secretary of State Authorization (Out of state bidders only)
3. Sales Tax Form C-3A
4. Supplier Diversity Subcontracting & Major Supplier Plan

END OF BID FORM

ACCOUNTING OF SALES TAX
ATTACHMENT TO BID FORM SECTION 00400
SALES TAX FORM C-3A

To: City of Mobile **Date:**_____

Name of Project: Trimmer Park – Lights Upgrades
Project Number: PR-068-24

SALES TAX ACCOUNTING

Pursuant to Act 2013-205, Section 1(g) the Contractor accounts for the sales tax NOT included in the bid proposal form as follows:

	ESTIMATED SALES TAX AMOUNT
BASE BID:	$_____

Failure to provide an accounting of sales tax shall render the bid non-responsive. Other than determining responsiveness, sales tax accounting shall not affect the bid pricing nor be considered in the determination of the lowest responsible and responsive bidder.

Legal Name of Bidder_____

Mailing Address_____

***By (Legal Signature)**_____

*Name (type or print)_____ (Seal)

*Title_____

Telephone Number_____

Contact Office of Small Business Development for questions on completing this form.
Via email:Archnique.kidd@cityofmobile.org
251.208.7967

Bidders and Proposers – Please complete and submit these forms as required by your City of Mobile Bid or Proposal Specification.

If you are submitting a proposal in response to a Request for Qualifications, Request for Proposal, or other solicitation ("Solicitations") issued by the City of Mobile, the bid specification may require you to utilize disadvantaged business enterprise ("DBE") subcontractors and suppliers. If SBE participation is required, you must complete and submit these forms with your proposal. If required, failure to submit this form will render your bid non-responsive. NOTE: To satisfy participation requirements for a federally funded project, you must utilize SBEs certified through the Alabama Unified Certification Program.

If SBE participation is required, and you fail to satisfy the participation requirement, you must show that you made a good faith effort to include such participation; you will be required to submit DBE Compliance Form 2 and include additional information if needed. When so required, failure to address adequately the good faith effort factors on Form 2 will render your bid or proposal non-responsive. The "good faith effort" factors on Form 2 are not intended to be a mandatory, exhaustive, or exclusive.

You are encouraged to work with the City of Mobile Small Business Development Manager when preparing this form. Please consult with the City Small Business Development Manager for a list of eligible SBEs. The "good faith effort" factors on **Form 2** are not intended to be mandatory, exhaustive, or exclusive; they are a tool to help you, and the City of Mobile, determine whether you made efforts which, by their scope, intensity, and appropriateness to the objective, would reasonably be expected to fulfill the participation requirement.

About **"DBEs"**: Disadvantaged business enterprise or DBE means a for-profit small business concern (1) That is at least 51 percent owned by one or more individuals who are both socially and economically disadvantaged or, in the case of a corporation, in which 51 percent of the stock is owned by one or more such individuals; and (2) whose management and daily business operations are controlled by one or more of the socially and economically disadvantaged individuals who own it.

About **"Good Faith" Effort**: Good faith efforts mean efforts to achieve a DBE goal or other requirement of this part which, by their scope, intensity, and appropriateness to the objective, can reasonably be expected to fulfill the program requirement. The City of Mobile expects contractors holding large contracts to recruit and engage DBEs to be a part of their team.

Failure to submit this form, when so required by the bid or proposal specification, will render your bid non-responsive.

Contact Office of Small Business Development for questions on completing this form.
Via email:Archnique.kidd@cityofmobile.org
251.208.7967

FORM 1: Background and Plan

Section I. Information about your company

Company	
Address	
Telephone	
E-Mail	

RFP/RFQ Solicitation Number	
Project Description	
Is your company a DBE company?	Yes ☐ No ☐
Work force demographics	Male _____ Female _____ Minority _____ Non-minority _____SDVO _____ Total number of Employees ____

Subcontractor/Major Supplier Plan submitted by:

Printed Name: _____

Signature: _____Date: _____

Title: _____

The following employee will be designated as the **DBE Liaison** for all communication regarding DBE participation including documentation for DBE participation and maintenance of records of Good Faith Efforts for this contract award:

Name: _____Title: _____

Email: _____Phone: _____

Contact Office of Small Business Development for questions on completing this form.
Via email:Archnique.kidd@cityofmobile.org
251.208.7967

FORM 1: Background and Plan (Cont'd

Section II. Subcontractors/Major Vendors Supplier Plan submitted by:

Please Print Company_____ Your Bid/Proposal Amount $_____ Date:_____

Description_____ Name of Bidder/Proposer: _____

I intend to use the following subcontractors: (Attach additional pages if necessary)

Subcontractor or Major Supplier	Phone	Scope(s) of Work to be performed by the DBE, SDVOB	$$ Value of Proposed Contract with DBE	% of TOTAL Contract	DBE?	Official Verification Only

Form 2: Good Faith Effort Documentation

Name of Bidder: _____

Contact Person: _____ Phone: _____ Email: _____

Please complete this form if you are unable to identify DBE subcontractors or suppliers to reach 15% of the value of your bid.

YES (□)	NO (□)	Did you do these suggested areas for DBE recruitment and engagement
		PRE-BID MEETING(S): The bidder attended all pre-bid meetings scheduled by the City to inform DBEs of contracting and subcontracting opportunities.
		DBE/ALDOT DBE LIST(S): The bidder utilized the Office of Small Business Development list or lists of certified through the Alabama Department of Transportation UCP DBE Listing
		SMALL CONTRACT(S): The bidder selected specific portions of the work to be performed by DBEs in order to increase the likelihood of meeting the DBE goals (including breaking down contracts into smaller units to facilitate DBE participation). Consider support services, including insurance, accounting, temporary labor, and transportation, landscaping, and janitorial as potential areas for DBE use.
		FOLLOW-UP: The bidder followed-up initial indications of interest by DBEs by contacting those DBEs to determine with certainty if they remained interested in bidding.
		GOOD FAITH NEGOTIATIONS: The bidder negotiated in good faith with interested DBEs and did not reject DBEs as unqualified without sound business reasons based on a thorough investigation of their capabilities. Bidders are not expected to engage unqualified subcontractors or subcontractors whose pricing, after negotiation, remains excessive or unreasonable. (Please document qualification deficiencies or unreasonable pricing if it prevented your engagement of specific DBE subcontractors.)
		ADVERTISEMENT: The bidder advertised in general circulation and/or trade association publications concerning subcontracting opportunities and allowed DBEs reasonable time to respond.
		INTERNET ADVERTISING: The bidder advertised DBE and/or subcontracting opportunities in the newspaper or other internet portals that are accessible to DBEs and/or potential subcontractors.

		INFORMATION: The bidder provided interested DBEs with adequate information about the plans, specifications and requirements of the subcontract.
		WRITTEN NOTICE(S): The bidder/proposer took the necessary steps to provide written notice in a manner reasonably calculated to inform DBEs of subcontracting opportunities and allowed sufficient time for them to participate effectively.
		COMMUNITY RESOURCES: The bidder/proposer used the services of available community organizations, small and/or disadvantaged business assistance offices and other organizations that provided assistance in the recruitment and placement of DBE firms.

CONTRACT RECORDS:
The bidder/proposer has maintained the following records for each DBE that has bid on the subcontracting opportunity:
1. Name, address, email address and telephone number
2. A description of information provided by the bidder/proposer or subcontractor; and
3. A statement of whether an agreement was reached, and if not, why not, including any reasons for concluding that the DBE was unqualified to perform the job.

Section 2(B)

_____ There are not ways to break out 15% of the value of this contract for subcontractors / suppliers. Provide further details as to why and attach the document to this form if there is an inability to break out 15% of the value of the contract was the reason, or a reason, you could not meet the participation requirements.

_____ Could not find sufficient DBEs to provide subcontracting or supplier services.

_____ DBEs were available but did not have sufficient qualifications or experience to meet the needs of this contract.

Please indicate additional efforts you have taken to recruit and engage DBEs. _____

_____

_____

SECTION 00500
STANDARD FORM OF AGREEMENT BETWEEN OWNER AND CONTRACTOR

PART 1 GENERAL

A. This section includes the STANDARD FORM OF AGREEMENT BETWEEN OWNER and CONTRACTOR, AIA Document A101, wherein the basis of payment is a Stipulated Sum; the document has been electronically modified to meet the Owner's requirements and shall be used for the Project.

AIA® Document A101® – 2017

Standard Form of Agreement Between Owner and Contractor *where the basis of payment is a Stipulated Sum*

AGREEMENT made as of the date last signed.
(In words, indicate day, month and year.)

BETWEEN the Owner:
(Name, legal status, address and other information)

City of Mobile
Real Estate Asset Management Department
P. O. Box 1827
Mobile, AL 36633-1827

and the Contractor:
(Name, legal status, address and other information)

_____
_____
_____

for the following Project:
(Name, location and detailed description)

CIP Trimmier Park Lights Upgrade
PR-068-24
3600 Alba Club Road
Mobile, AL 36605
F584-001 UPGRADING THE LIGHTING SYSTEM FOR SAFETY IN THE FOOTBALL FIELD AREA

The Design Consultant:
(Name, legal status, address and other information)

Jaguar Consulting, LLC
8658 Capital Drive North
Mobile, AL 36695
(251)307-1037

The Owner and Contractor agree as follows.

ADDITIONS AND DELETIONS: The author of this document may have revised the text of the original AIA standard form. An *Additions and Deletions Report* that notes revisions to the standard form text is available from the author and should be reviewed. A vertical line in the left margin of this document indicates where the author has added to or deleted from the original AIA text.

This document has important legal consequences. Consultation with an attorney is encouraged with respect to its completion or modification.

The parties should complete A101®–2017, Exhibit A, Insurance and Bonds, contemporaneously with this Agreement. AIA Document A201®–2017, General Conditions of the Contract for Construction, is adopted in this document by reference. Do not use with other general conditions unless this document is modified.

ELECTRONIC COPYING of any portion of this AIA® Document to another electronic file is prohibited and constitutes a violation of copyright laws as set forth in the footer of this document.

DRAFT

AIA Document A101 – 2017. Copyright © 1915, 1918, 1925, 1937, 1951, 1958, 1961, 1963, 1967, 1974, 1977, 1987, 1991, 1997, 2007 and 2017. All rights reserved. "The American Institute of Architects," "American Institute of Architects," "AIA," the AIA Logo, and "AIA Contract Documents" are trademarks of The American Institute of Architects. This draft was produced at 18:57:09 CDT on 05/15/2026 under Subscription No.20240042832 which expires on 07/01/2026, is not for resale, is licensed for one-time use only, and may only be used in accordance with the AIA Contract Documents® Terms of Service. To report copyright violations, e-mail docinfo@aiacontracts.com.
User Notes: (69fcdcac800d4588359ef159)

TABLE OF ARTICLES

1 THE CONTRACT DOCUMENTS

2 THE WORK OF THIS CONTRACT

3 DATE OF COMMENCEMENT AND SUBSTANTIAL COMPLETION

4 CONTRACT SUM

5 PAYMENTS

6 DISPUTE RESOLUTION

7 TERMINATION OR SUSPENSION

8 MISCELLANEOUS PROVISIONS

9 ENUMERATION OF CONTRACT DOCUMENTS

EXHIBIT A INSURANCE AND BONDS

ARTICLE 1 THE CONTRACT DOCUMENTS

The Contract Documents consist of this Agreement, Conditions of the Contract (General, Supplementary, and other Conditions), Drawings, Specifications, Addenda issued prior to execution of this Agreement, other documents listed in this Agreement, and Modifications issued after execution of this Agreement, all of which form the Contract, and are as fully a part of the Contract as if attached to this Agreement or repeated herein. The Contract represents the entire and integrated agreement between the parties hereto and supersedes prior negotiations, representations, or agreements, either written or oral. An enumeration of the Contract Documents, other than a Modification, appears in Article 9.

ARTICLE 2 THE WORK OF THIS CONTRACT

The Contractor shall fully execute the Work described in the Contract Documents, except as specifically indicated in the Contract Documents to be the responsibility of others.

ARTICLE 3 DATE OF COMMENCEMENT AND SUBSTANTIAL COMPLETION

§ 3.1 The date of commencement of the Work shall be:
(Check one of the following boxes.)

[ ] The date of this Agreement.

[X] A date set forth in a notice to proceed issued by the Owner.

[ ] Established as follows:
(Insert a date or a means to determine the date of commencement of the Work.)

§ 3.1.1 Notwithstanding the preceding, Contractor shall perform no work under this Contract until receipt of a notice to proceed. Contractor acknowledges and agrees that no minimum amount of work is guaranteed under this Contract and City may elect to issue no notice to proceed. If a notice is issued, the City reserves the right to amend, reduce or cancel the notice in its sole discretion.

§ 3.2 The Contract Time shall be measured from the date of commencement of the Work.

§ 3.3 Substantial Completion

§ 3.3.1 Subject to adjustments of the Contract Time as provided in the Contract Documents, the Contractor shall achieve Substantial Completion of the entire Work:
(Check one of the following boxes and complete the necessary information.)

[ ] Not later than ( ) calendar days from the date of commencement of the Work.

AIA Document A101 – 2017. Copyright © 1915, 1918, 1925, 1937, 1951, 1958, 1961, 1963, 1967, 1974, 1977, 1987, 1991, 1997, 2007 and 2017. All rights reserved. "The American Institute of Architects," "American Institute of Architects," "AIA," the AIA Logo, and "AIA Contract Documents" are trademarks of The American Institute of Architects. This draft was produced at 18:57:09 CDT on 05/15/2026 under Subscription No.20240042832 which expires on 07/01/2026, is not for resale, is licensed for one-time use only, and may only be used in accordance with the AIA Contract Documents® Terms of Service. To report copyright violations, e-mail docinfo@aiacontracts.com.
User Notes: (69fcdcac800d4588359ef159)

[X] By the following date: August 31, 2026

§ 3.3.3 If the Contractor fails to achieve Substantial Completion as provided in this Section 3.3, liquidated damages, if any, shall be assessed as set forth in Section 4.5.

ARTICLE 4 CONTRACT SUM

§ 4.1 The Owner shall pay the Contractor the Contract Sum in current funds for the Contractor's performance of the Contract. The Contract Sum shall be ($), subject to additions and deductions as provided in the Contract Documents.

Base Bid: $0.00

Envelope Adjustment: $ 0.00

Contingency Allowances: $20,000.00

Alternates 1,2,3, and 5: $0.00

Total Contract Sum: $0.00

§ 4.2 Alternates

§4.2.1 Alternates, if any, included in the Contract Sum:

Item	Price

§ 4.3 Allowances, if any, included in the Contract Sum:

Item	Price

§ 4.3 Contingency Allowance

§4.3.1 Contingency Allowance shall cover cost of material, labor, overhead, profit and other expenses for complete installation of items of additional work as required for a complete, functional project.

§4.3.2 Contingency Allowance shall be used for unforeseen conditions not covered in the construction documents.

§4.3.3 All extra work under this section must be authorized by the Owner, in writing, prior to procurement of materials or undertaking work

§4.3.4 Upon completion of the Work, the unused portion of the Allowance shall be credited back to the Owner in the form of a Change Order.

§4.3.5 Allowances are subject to the same provision of AIA 201 §7.3.7.

§ 4.4 Unit prices, if any:
(Identify the item and state the unit price and quantity limitations, if any, to which the unit price will be applicable.)

Item	Units and Limitations	Price per Unit (Price per Unit ($0.00).00)

§ 4.5 Liquidated damages

AIA Document A101 – 2017. Copyright © 1915, 1918, 1925, 1937, 1951, 1958, 1961, 1963, 1967, 1974, 1977, 1987, 1991, 1997, 2007 and 2017. All rights reserved. "The American Institute of Architects," "American Institute of Architects," "AIA," the AIA Logo, and "AIA Contract Documents" are trademarks of The American Institute of Architects. This draft was produced at 18:57:09 CDT on 05/15/2026 under Subscription No.20240042832 which expires on 07/01/2026, is not for resale, is licensed for one-time use only, and may only be used in accordance with the AIA Contract Documents® Terms of Service. To report copyright violations, e-mail docinfo@aiacontracts.com.
User Notes: (69fcdcac800d4588359ef159)

DRAFT

Any delay in the completion of the Work as provided for in the Contract Documents will cause inconvenience to the public and loss and damage to the Owner in interest, and in additional administrative, architectural, inspection, and supervision charges. Therefore, a time charge equal to ($250.00) per calendar day will be made against the Contractor for the entire period that any part of the Work that remains uncompleted or any required closeout documents that are not acceptably submitted for more than thirty (30) days after the time specified for the Substantial Completion of the Work, the amount of which shall be deducted by the Owner, and shall be retained by the Owner out of monies otherwise due the Contractor in the final payment, not as a penalty, but as liquidated damages sustained.

ARTICLE 5 PAYMENTS

§ 5.1 Progress Payments

§ 5.1.1 Based upon Applications for Payment submitted to the Design Consultant by the Contractor and Certificates for Payment issued by the Design Consultant, the Owner shall make progress payments on account of the Contract Sum to the Contractor as provided below and elsewhere in the Contract Documents.

§ 5.1.2 The period covered by each Application for Payment shall be one calendar month ending on the 25th of the month.

§ 5.1.3 Provided that an Application for Payment is received by the Design Consultant not later than the First day of a month, the Owner shall make payment of the amount certified to the Contractor not later than the Tenth day of the following month. If an Application for Payment is received by the Design Consultant after the application date fixed above, payment of the amount certified shall be made by the Owner not later than Thirty (30) days after the Design Consultant receives the Application for Payment.

§ 5.1.4 Each Application for Payment shall be based on the most recent schedule of values submitted by the Contractor in accordance with the Contract Documents. The schedule of values shall allocate the entire Contract Sum among the various portions of the Work. The schedule of values shall be prepared in such form, and supported by such data to substantiate its accuracy, as the Design Consultant may require. This schedule of values shall be used as a basis for reviewing the Contractor's Applications for Payment.

§ 5.1.5 Applications for Payment shall show the percentage of completion of each portion of the Work as of the end of the period covered by the Application for Payment.

§ 5.1.6 In accordance with AIA Document A201™–2017, General Conditions of the Contract for Construction, and subject to other provisions of the Contract Documents, the amount of each progress payment shall be computed as follows:

§ 5.1.6.1 The amount of each progress payment shall first include:

- **.1** That portion of the Contract Sum properly allocable to completed Work;
- **.2** That portion of the Contract Sum properly allocable to materials and equipment delivered and suitably stored at the site for subsequent incorporation in the completed construction, or, if approved in advance by the Owner, suitably stored off the site at a location agreed upon in writing; and
- **.3** That portion of Construction Change Directives that the Design Consultant determines, in the Design Consultant 's professional judgment, to be reasonably justified.

§ 5.1.6.2 The amount of each progress payment shall then be reduced by:

- **.1** The aggregate of any amounts previously paid by the Owner;
- **.2** The amount, if any, for Work that remains uncorrected and for which the Design Consultant has previously withheld a Certificate for Payment as provided in Article 9 of AIA Document A201–2017;
- **.3** Any amount for which the Contractor does not intend to pay a Subcontractor or material supplier, unless the Work has been performed by others the Contractor intends to pay;
- **.4** For Work performed or defects discovered since the last payment application, any amount for which the Design Consultant may withhold payment, or nullify a Certificate of Payment in whole or in part, as provided in Article 9 of AIA Document A201–2017; and
- **.5** Retainage withheld pursuant to Section 5.1.7.

§ 5.1.6.3 Any Progress Payment shall include partial release of liens for material and labor for previous application for payment amount approved and paid. The DBE Utilization Report shall be included with the pay application.

§ 5.1.7 Retainage

AIA Document A101 – 2017. Copyright © 1915, 1918, 1925, 1937, 1951, 1958, 1961, 1963, 1967, 1974, 1977, 1987, 1991, 1997, 2007 and 2017. All rights reserved. "The American Institute of Architects," "American Institute of Architects," "AIA," the AIA Logo, and "AIA Contract Documents" are trademarks of The American Institute of Architects. This draft was produced at 18:57:09 CDT on 05/15/2026 under Subscription No.20240042832 which expires on 07/01/2026, is not for resale, is licensed for one-time use only, and may only be used in accordance with the AIA Contract Documents® Terms of Service. To report copyright violations, e-mail docinfo@aiacontracts.com.
User Notes: (69fcdcac800d4588359ef159)

§ 5.1.7.1 For each progress payment made prior to Substantial Completion of the Work, the Owner may withhold the following amount, as retainage, from the payment otherwise due:

Five percent (5%) of the first fifty percent (50%) of the completed work and after fifty percent (50%) completion has been accomplished, no further retainage shall be held from the original Contract Sum. Increases in the contract sum by Change Order shall also be subject to retainage.

§ 5.1.7.1.1 The following items are not subject to retainage: N/A

§ 5.1.7.2 Reduction or limitation of retainage, if any, shall be as follows:

The net amount of the Retainage shall be equal to two and one half percent (2.5%) of total Contract Sum, as increased or decreased by Change Order

§ 5.1.7.3 If final completion of the work is materially delayed through no fault of the Contractor, the Owner may, at the Owner's sole discretion, without terminating the Contract, release the withheld retention, or any portion thereof, prior to final completion of the work provided the Contractor has complied with § 5.2.2 for the portion of the work for which retainage is being released.

§ 5.1.8 Except with the Owner's prior approval, the Contractor shall not make advance payments to suppliers for materials or equipment which have not been delivered and stored at the site.

§ 5.2 Final Payment

§ 5.2.1 Final monthly progress payment, constituting the entire unpaid balance of the Contract Sum, less retainage, shall be made by the Owner to the Contractor when the Contractor has fully performed the Contract except for the Contractor's responsibility to correct Work as provided in Article 12 of AIA Document A201 (including Owner's then-current modifications which may be obtained from the Owner or, alternatively, a copy of which is incorporated in the Project Manual and incorporated by reference herein as a part thereof), and to satisfy other requirements, if any, which extend beyond final payment; and a Certificate of Substantial Completion has been issued by the Design Consultant /Owner and the project accepted.

§ 5.2.2 The final two- and one-half percent (2.5%) of the total Contract Sum retained by the Owner for final payment to the Contractor of retainage will not be paid until proof of publication is submitted and all written claims paid in full. Contractor to submit the following to show that these requirements have been met:

.1 Contractor's Affidavit of Payment of Debts and Claims (AIA form G706, included in contract documents)
- **.1.1** Contractor's Release or Waiver of Liens
- **.1.2** Releases or Waivers of Liens from Subcontractors and Material and Equipment Suppliers;

.2 Contractor's Affidavit of Release of Liens (AIA form G706A, included in contract documents);
.3 Consent of Surety, if any, to final payment (AIA form G707, included in contract documents);
.4 Any additional close out requirements per the contract documents; and
.5 Notarized Affidavit of Notice of Completion advertisement from publisher.

§ 5.3 Publication of Completion

§ 5.3.1 Contractor shall provide proof of publication of Notice of Completion in a local newspaper once per week for a minimum of three (3) consecutive weeks, as required in the Ala. Code 1975 § 39-1-1 (f).

.1 The Notice of Completion shall read as follows:

STATE OF ALABAMA
COUNTY OF MOBILE
NOTICE OF COMPLETION

In accordance with Chapter I, Title 39, Code of Alabama, 1975, NOTICE IS HEREBY given that _____ [contractor name] has completed the contract for CIP Trimmier Park Lights Upgrade, located at 3600 Alba Club Road Mobile, AL 36605. All persons having any claims for labor, material or otherwise in connection with this project should immediately notify the Real Estate Asset Managment Department, City of Mobile, P. O. Box 1827, Mobile, Alabama 36633-1827.

§ 5.3.2 Publication of the Notice of Completion shall not begin until the Project has been accepted as Substantially Complete by the City of Mobile.

AIA Document A101 – 2017. Copyright © 1915, 1918, 1925, 1937, 1951, 1958, 1961, 1963, 1967, 1974, 1977, 1987, 1991, 1997, 2007 and 2017. All rights reserved. "The American Institute of Architects," "American Institute of Architects," "AIA," the AIA Logo, and "AIA Contract Documents" are trademarks of The American Institute of Architects. This draft was produced at 18:57:09 CDT on 05/15/2026 under Subscription No.20240042832 which expires on 07/01/2026, is not for resale, is licensed for one-time use only, and may only be used in accordance with the AIA Contract Documents® Terms of Service. To report copyright violations, e-mail docinfo@aiacontracts.com.
User Notes: (69fcdcac800d4588359ef159)

§ 5.3.2 Final settlement shall not be paid until 30 days after the completion of the notice of publication Ala. Code 1975 § 39-1-1 (f) (3).

ARTICLE 6 DISPUTE RESOLUTION

§ 6.1 Initial Decision Maker The Design Consultant will serve as the Initial Decision Maker pursuant to Article 15 of AIA Document A201-2017, unless the parties appoint below another individual, not a party to this Agreement, to serve as the Initial Decision Maker.

§ 6.2 Binding Dispute Resolution

For any Claim, the method of binding dispute resolution shall be litigation in a court of competent jurisdiction.

§ 6.3 Governing Law and Venue

This Agreement shall be governed by the laws of the State of Alabama, and the appropriate venue of any actions arising out of this Agreement shall be a court of proper jurisdiction in Mobile, Alabama.

ARTICLE 7 TERMINATION OR SUSPENSION

§ 7.1 The Contract may be terminated by the Owner or the Contractor as provided in Article 14 of AIA Document A201, General Conditions of the Contract for Construction, including Owner's then-current modifications, a copy of which is incorporated in the contract documents and incorporated by reference herein as a part thereof.

§ 7.2 The Work may be suspended by the Owner as provided in Article 14 of AIA Document A201, General Conditions of the Contract for Construction, including Owner's then-current modifications, a copy of which is incorporated in the contract documents and incorporated by reference herein as a part thereof.

ARTICLE 8 MISCELLANEIOUS PROVISIONS

§ 8.1 Where reference is made in this Agreement to a provision of AIA Document A201 or another Contract Document, the reference refers to that provision as amended or supplemented by other provisions of the Contract Documents. A copy of such amended, revised or supplemental provision is incorporated in the contract documents and hereby incorporated by reference herein as a part thereof.

§ 8.2 The Owner's representative:

Director, Real Estate and Asset Management
P.O. Box 1827
Mobile, AL 36633-1827

§ 8.3 The Contractor's representative:

_____
_____
_____

§ 8.4 Neither the Owner's nor the Contractor's representative shall be changed without ten (10) days' prior notice to the other party.

§ 8.5 Insurance and Bonds

§ 8.5.1 Liability of Contractor: To the fullest extent permitted by law, Contractor covenants to release, defend, indemnify, hold harmless, protect, and exonerate both the City and its agents, employees, and representatives, from and against any and all liability, claims (direct and indirect), damages, losses, suits, actions, demands, liens, arbitrations, administrative proceedings, awards, judgments, expenses, costs, and attorneys' fees pertaining to personal injury, bodily injury, death, damage to or destruction of property (including any loss of use), economic loss or damage, labor disputes, safety requirements, performance or non-performance of obligations, certifications, property rights of third parties, sickness or disease, which (1) are caused in whole or in part by the Contractor (herein defined to include but not be limited to Contractor's owners, employees, agents, representatives, subcontractors, suppliers, and invitees or other third parties connected with the Contractor as well as the agents or employees of any of them), or (2) arise out of or are related to work undertaken or to be performed by the Contractor, or (3) arise out of or are related to any other act or omission relating to the Contractor, the Contract, the work under the Contract or otherwise undertaken by the Contractor as defined in the parenthetical of (1) above. It is the specific and express intent of the parties to the contract for the foregoing covenants and indemnity obligations to apply to the fullest extent permitted by applicable law, regardless of whether the liability is caused in whole or in part by a party indemnified hereunder, and whether said liability be caused by, or arise out of, any joint, concurrent, or contributory negligence of a party indemnified hereunder. The contractor agrees it is not a design professional within the meaning of § 41-9A-3, Ala. Code (1975).

§ 8.5.1. This section of the Agreement will survive the expiration or termination of the Agreement.

§ 8.5.2 Contractors Insurance

AIA Document A101 – 2017. Copyright © 1915, 1918, 1925, 1937, 1951, 1958, 1961, 1963, 1967, 1974, 1977, 1987, 1991, 1997, 2007 and 2017. All rights reserved. "The American Institute of Architects," "American Institute of Architects," "AIA," the AIA Logo, and "AIA Contract Documents" are trademarks of The American Institute of Architects. This draft was produced at 18:57:09 CDT on 05/15/2026 under Subscription No.20240042832 which expires on 07/01/2026, is not for resale, is licensed for one-time use only, and may only be used in accordance with the AIA Contract Documents® Terms of Service. To report copyright violations, e-mail docinfo@aiacontracts.com.
User Notes: (69fcdcac800d4588359ef159)

.1 Workmen's Compensation Insurance: - Statutory-amount and coverage as required by all applicable laws, rules or regulations of the State of Alabama and the United States of America, including the U. S. Longshore and Harbor Workers Act and the Jones Act, and "in rem" endorsements if applicable.

.2 Employee's Liability Insurance shall be provided for limits of liability not less than:

Bodily Injury by Accident	$1,000,000 each accident
Bodily Injury by Disease	$1,000,000 each employee
Bodily Injury by Disease	$1,000,000 each policy

.3 The Contractor shall provide Broad Form (commonly termed Comprehensive) General Liability Insurance (including premises-product-completed operations, independent contractors, and blanket contractual liability), specifically covering the obligations assumed by the Contractor for limits of liability not less than:

Bodily Injury	$1,000,000 each person $1,000,000 each occurrence
Property Damage	$1,000,000 each occurrence; or
Bodily Injury and Property Damage	$1,000,000 combined single limit

.4 Such comprehensive policy shall include the following:

- **.1** All liability of the Contractor, for the Contractor's Direct Operations
- **.2** Subcontractor's Operations
- **.3** Completed Operations Cover, thereby meaning any loss which shall occur after the contract has been completed, but which can be traced back to the Contract
- **.4** General Aggregate Limit of $2,000,000 shall apply on a "Per Project" Basis
- **.5** Contractual Liability, meaning thereby; any risk assumed by the Contractor under Hold Harmless Agreements or any other assumption of liability
- **.6** Broad Form Property Damage Coverage, including Completed Operations
- **.7** Personal Injury Liability, with employee's exclusions removed
- **.8** Explosion and Collapse Hazard (if applicable)

.5 Commercial/Business Automobile Liability applicable to all automobiles owned, hired, rented or used by the contractor and automobiles not owned by but used on behalf of the contractor. The automobile liability policy must be provided on either ISO form #CA 00 01 (current edition) or an industry equivalent. In the event the contractor's automobiles haul hazardous materials, the Contractor's policy must be amended to include Pollution Liability-Broadened Coverage (CA9948) or equivalent coverage. Coverage must be maintained until the project has been completed. Policy will provide the following minimum limits:

Bodily Injury	$1,000,000 each person $1,000,000 each occurrence
Property damage	$1,000,000 each occurrence; or,
Bodily Injury and Property damage	$1,000,000 combined single limit

.6 Umbrella/Excess Liability: $2,000,000 combined single limit each occurrence for bodily injury and/or property damage

.7 Builder's Risk Coverage (Property Insurance): The Contractor shall carry for the City, himself, and all Subcontractors a Builder's Risk Policy to cover the full amount of the Contract during construction, fabrication or erection of any equipment.

.1 The Contractor shall purchase and maintain, in a company or companies lawfully authorized to do business in the jurisdiction in which the Project is located, property insurance written on a builder's risk "all-risk" or equivalent policy form in the amount of the initial Contract Sum, plus value of subsequent Contract Modifications and cost of materials supplied or installed by others, comprising total value for the entire Project at the site on a replacement cost basis. Such property insurance shall be maintained, unless otherwise provided in the Contract Documents or otherwise agreed in writing by all persons and entities who are

AIA Document A101 – 2017. Copyright © 1915, 1918, 1925, 1937, 1951, 1958, 1961, 1963, 1967, 1974, 1977, 1987, 1991, 1997, 2007 and 2017. All rights reserved. "The American Institute of Architects," "American Institute of Architects," "AIA," the AIA Logo, and "AIA Contract Documents" are trademarks of The American Institute of Architects. This draft was produced at 18:57:09 CDT on 05/15/2026 under Subscription No.20240042832 which expires on 07/01/2026, is not for resale, is licensed for one-time use only, and may only be used in accordance with the AIA Contract Documents® Terms of Service. To report copyright violations, e-mail docinfo@aiacontracts.com.
User Notes: (69fcdcac800d4588359ef159)

beneficiaries of such insurance, until final payment has been made, or until no person or entity other than the City has an insurable interest in the property, whichever is later. This insurance shall include interests of the City, the Contractor, Subcontractors, Sub-subcontractors, and the Design Professionals in the Project.

.2 Property insurance shall be on an "all-risk" or equivalent policy form and shall include, without limitation, insurance against the perils of fire (with extended coverage) and physical loss or damage including, without duplication of coverage, theft, vandalism, malicious mischief, collapse, windstorm, falsework, testing and startup, temporary buildings and debris removal including demolition occasioned by enforcement of any applicable legal requirements, and shall cover reasonable compensation for Architect's/Engineer's and Contractor's services and expenses required as a result of such insured loss.

.3 If the property insurance requires deductibles, the Contractor shall pay costs not covered because of such deductibles. Deductibles shall be limited to a maximum of $2,500.00 unless the loss is caused by windstorm; then deductible shall be a maximum of three percent (3%) of the insured value.

.4 This property insurance shall cover the full value of equipment, material, and other portions of the Work stored off the site, and also portions of the Work in transit. There shall be no limits on the value of loss per occurrence.

.5 A named storm endorsement is required. The deductible shall be a maximum of three percent (3%) of the insured value.

.8 A Surety authorized to do business in the State of Alabama shall furnish the required Insurance.

.9 The standard ACORD™ format shall be provided. The ACORD™ Certificate must be signed or countersigned by a Licensed Resident Agent of the State of Alabama and the agent's name, address and telephone number must appear on the face of the certificate.

.10 The Surety must have a minimum rating of A/Class VI as reported in the latest issue of Best's Key Rating Guide Property-Casualty, published by Alfred M. Best Company, Inc. if the bid price exceeds $50,000.00.

.11 Contractor shall procure and maintain insurance as specified above:

.1 The insurance shall be written for not less than limits of liability specified in the Contract Documents or required by law, whichever coverage is greater. Coverages, whether written on an occurrence or claims-made basis, shall be maintained without interruption from the date of commencement of the Work until the date of final payment and termination of any coverage required to be maintained after final payment, and, with respect to the Contractor's completed operations coverage, until the expiration of the period for correction of Work or for such other period for maintenance of completed operations coverage as specified in the Contract Documents.

.2 Certificates of insurance acceptable to the City shall be filed with the City within ten (10) calendar days from date of issuance of contract forms for execution. Contractor shall deliver to the City of Mobile, certificates of insurance certifying the existence and limits of the insurance coverages along with separate policy endorsements.

.3 Contractor shall also be responsible for delivering policy renewal certificates to the City of Mobile, and thereafter upon renewal or replacement of each required policy of insurance.

.4 These certificates and the insurance policies shall contain a provision that coverages afforded under the policies will not be cancelled subject to non-renewal nor material change, or allowed to expire without at least thirty (30) days' (except ten (10) days from non-payment) prior written notice has been given to the City.

.5 An additional certificate evidencing continuation of liability coverage, including coverage for completed operations, shall be submitted with the final Application for Payment and thereafter upon renewal or replacement of such coverage until the expiration of the time. Information concerning reduction of coverage on account of revised limits or claims paid under the General Aggregate, or both, shall be furnished by the Contractor with reasonable promptness.

.12 All policies of insurance, except worker's compensation, shall be endorsed to provide that all such insurances are primary and non-contributing with any other insurance maintained by the City of Mobile and endorsed to waive rights of subrogation in favor of the City of Mobile.

AIA Document A101 – 2017. Copyright © 1915, 1918, 1925, 1937, 1951, 1958, 1961, 1963, 1967, 1974, 1977, 1987, 1991, 1997, 2007 and 2017. All rights reserved. "The American Institute of Architects," "American Institute of Architects," "AIA," the AIA Logo, and "AIA Contract Documents" are trademarks of The American Institute of Architects. This draft was produced at 18:57:09 CDT on 05/15/2026 under Subscription No.20240042832 which expires on 07/01/2026, is not for resale, is licensed for one-time use only, and may only be used in accordance with the AIA Contract Documents® Terms of Service. To report copyright violations, e-mail docinfo@aiacontracts.com.
User Notes: (69fcdcac800d4588359ef159)

.13 The Contractor shall cause the commercial liability coverage required by the Contract Documents to include (1) the City, the Design Consultant/ Engineer and the Design Consultant's/Engineer's Consultants as additional insureds for claims caused in whole or in part by the Contractor's negligent acts or omissions during the Contractor's operations; and (2) the City as an additional insured for claims caused in whole or in part by the Contractor's negligent acts or omissions during the Contractor's completed operations.

§ 8.5.3 Bonds The Contractor shall provide bonds as set forth below:

.1 Contractor shall furnish bonds covering faithful performance of the Contract and payment of obligations arising thereunder.

.2 Upon the request of any person or entity appearing to be a potential beneficiary of bonds covering payment of obligations arising under the Contract, the Contractor shall promptly furnish a copy of the bonds or shall authorize a copy to be furnished.

.3 The Labor and Material Payment Bond and the Performance Bond shall each be for one hundred percent (100%) of the Contract Sum.

.1 Bond shall be submitted with the executed agreement on provided form(s).
.2 Power of Attorney is required for both bonds.
.3 A Surety authorized to do business in the State of Alabama shall furnish both bonds.
.4 A Surety licensed to do business in the State of Alabama must execute the bonds.
.5 The Surety must have a minimum rating of A/Class VI as reported in the latest issue of Best's Key Rating Guide Property-Casualty, published by Alfred M. Best Company, Inc., if the bid price exceeds $50,000.00.
.6 The Surety company shall be required to execute AIA Document G-707, "Consent of Surety to Final Payment" prior to Final Payment being made to the Contractor.

§ 8.7 Warranties
Contractor shall provide a minimum one (1) years warranty from the date of substantial completion of all Labor and Materials for the Work covered by this contract, unless otherwise specified. Labor and Material warranties required by other sections of the construction document shall not conflict with this provision. The most stringent warranty provision shall apply.

§ 8.8 Force Majeure
In the event that either party hereto shall be delayed or hindered in or prevented from the performance of any act required hereunder by reason of strikes, lockouts, labor troubles, inability to procure materials, failure of power, restrictive governmental laws or regulations, riots, insurrection, war, Act of God, or other reason of a like nature not the fault of the party delayed in performing work or doing acts required under the terms of this Agreement, then performance of such act shall be excused for the period of the delay and the period for the performance of any such act shall be extended for a period equivalent to the period of such delay.

ARTICLE 9 ENUMERATION OF CONTRACT DOCUMENTS
§ 9.1 This Agreement is comprised of the following documents:

.1 AIA Document A101™–2017, Standard Form of Agreement Between Owner and Contractor

.2 AIA Document A201™–2017, General Conditions of the Contract for Construction

.3 Drawings- As provided in the City of Mobile CIP Trimmier Park Lights Upgrades Plan Set and Project Manual dated May 20, 2026 and Addenda

.4 Specifications- As provided in the City of Mobile CIP Trimmier Park Lights Upgrades Plan Set and Project Manual dated May 20, 2026 and Addenda

Portions of Addenda relating to bidding or proposal requirements are not part of the Contract Documents unless the bidding or proposal requirements are also enumerated in this Article 9.

.8 Other Exhibits:
Exhibit A: Office of Small Business Development Subcontracting and Major Supplier Plan
Exhibit B: Certificate of Liability Insurance

AIA Document A101 – 2017. Copyright © 1915, 1918, 1925, 1937, 1951, 1958, 1961, 1963, 1967, 1974, 1977, 1987, 1991, 1997, 2007 and 2017. All rights reserved. "The American Institute of Architects," "American Institute of Architects," "AIA," the AIA Logo, and "AIA Contract Documents" are trademarks of The American Institute of Architects. This draft was produced at 18:57:09 CDT on 05/15/2026 under Subscription No.20240042832 which expires on 07/01/2026, is not for resale, is licensed for one-time use only, and may only be used in accordance with the AIA Contract Documents® Terms of Service. To report copyright violations, e-mail docinfo@aiacontracts.com.
User Notes: (69fcdcac800d4588359ef159)

Exhibit C: Performance, Labor and Material Bonds
Exhibit D: E-Verify Documents
Exhibit E: Secretary of State
Exhibit F: Bidding And Contract Requirement Documents

§ 9.2.2 Best Management Practices (BMPs): The Contractor shall be responsible for providing, implementing and maintaining BMPs for sediment and erosion control in full compliance with all applicable Local, State and Federal Codes and Ordinances throughout the contract period. All Work shall be in accordance with the Clean Water Act; the Alabama Water Pollution Control Act; the current version of the Alabama Handbook for Erosion Control, Sediment Control Storm water Management on Construction sites and Urban Areas; and the current version of the Mobile, Alabama City Code Chapter 17 Storm water Management and Flood Control. All Wastewater with oils, grease, paint, mortar, etc., shall be properly contained and disposed of.

§ 9.2.3 Contractor shall comply with all Federal, State and local laws concerning nondiscrimination, including but not limited to City of Mobile Ordinance No. 14-034 which requires, *inter alia*, that all contractors performing work for the City of Mobile not discriminate on the basis of race, creed, color, national origin or disability, require that all subcontractors they engage do the same, and make every reasonable effort to assure that fifteen percent of the work performed under contract be awarded to socially and economically disadvantaged individuals and business entities.

§ 9.2.4 By signing this contract, the contracting parties affirm, for the duration of the agreement, that they will not violate federal immigration law or knowingly employ, hire for employment, or continue to employ an unauthorized alien within the State of Alabama. Furthermore, a contracting party found to be in violation of this provision shall be deemed in breach of the agreement and shall be responsible for all damages resulting therefrom.

§ 9.2.5 Public Contracts with Entities Engaging in certain Boycott Activities
By signing this contract, the Contractor further represents and agrees that it is not currently engaged in, nor will it engage in, any boycott of a person or entity based in or doing business with a jurisdiction with which the State of Alabama can enjoy open trade.

§ 9.2.6 Severability Clause
In case any one or more of the provisions contained in this Agreement shall for any reason be held to be invalid, illegal or unenforceable in any respect, such invalidity, illegality or unenforceability shall not affect any other provisions of this Agreement, but this Agreement shall be construed as if such invalid or illegal or unenforceable provision had never been contained herein. Upon such determination that any term or other provision is invalid, illegal or unenforceable, the court or other tribunal making such determination is authorized and instructed to modify this Agreement so as to effect the original intent of the parties as closely as possible so that the transactions and agreements contemplated herein are consummated as originally contemplated to the fullest extent possible.

§ 9.2.7 Non-Agency Clause
Contractor, in the performance of its operations and obligations hereunder, shall not be deemed to be an agent of City but shall be deemed to be an independent Contractor in every respect and shall take all steps at its own expense, as City may from time to time request, to indicate that it is an independent Contractor. City does not and will not assume any responsibility for the means by which or the manner in which the services by Contractor provided for herein are performed, but on the contrary, Contractor shall be wholly responsible therefore.

ARTICLE 10 USE OF CITY PROJECT MANAGEMENT SOFTWARE (E-BUILDER)

§ 10.1 The City of Mobile utilizes e-Builder, a cloud-based Construction Project Management Information System (PMIS) that streamlines every aspect of construction projects, including planning, estimating, document control, construction, and closeout. The Contractor shall participate in a City-provided training session on the use of e-Builder. This training is mandatory for all personnel responsible for submitting schedules, pay applications, submittals, Requests for Information (RFIs), and other project-related documentation through the e-Builder platform. Training will be provided by the City at no cost to the Contractor. Failure to complete the required training may be considered a material breach of this Agreement, and may delay processing of project documentation.

AIA Document A101 – 2017. Copyright © 1915, 1918, 1925, 1937, 1951, 1958, 1961, 1963, 1967, 1974, 1977, 1987, 1991, 1997, 2007 and 2017. All rights reserved. "The American Institute of Architects," "American Institute of Architects," "AIA," the AIA Logo, and "AIA Contract Documents" are trademarks of The American Institute of Architects. This draft was produced at 18:57:09 CDT on 05/15/2026 under Subscription No.20240042832 which expires on 07/01/2026, is not for resale, is licensed for one-time use only, and may only be used in accordance with the AIA Contract Documents® Terms of Service. To report copyright violations, e-mail docinfo@aiacontracts.com.
User Notes: (69fcdcac800d4588359ef159)

This Agreement entered into as of the day and year of last execution:

CONTRACTOR:

_____
NAME, TITLE

STATE OF _____)
COUNTY OF _____)

Before me, the undersigned a Notary Public in and for said County and State, personally appeared_____ __ and after being duly sworn, did depose and say that he, as such officer and with full authority, signed the above and foregoing voluntarily as the act of said corporation on the day the same bears date.

Sworn to and subscribed for me this _____ day of _____, 2026.

_____
NOTARY PUBLIC
My Commission Expires: _____

CITY OF MOBILE
By:_____
Spiro N. Cheriogotis, Mayor
Date:_____
ATTEST:

_____
City Clerk

DRAFT

AIA Document A101 – 2017. Copyright © 1915, 1918, 1925, 1937, 1951, 1958, 1961, 1963, 1967, 1974, 1977, 1987, 1991, 1997, 2007 and 2017. All rights reserved. "The American Institute of Architects," "American Institute of Architects," "AIA," the AIA Logo, and "AIA Contract Documents" are trademarks of The American Institute of Architects. This draft was produced at 18:57:09 CDT on 05/15/2026 under Subscription No.20240042832 which expires on 07/01/2026, is not for resale, is licensed for one-time use only, and may only be used in accordance with the AIA Contract Documents® Terms of Service. To report copyright violations, e-mail docinfo@aiacontracts.com.
User Notes: (69fcdcac800d4588359ef159)

DRAFT

AIA Document A101 – 2017. Copyright © 1915, 1918, 1925, 1937, 1951, 1958, 1961, 1963, 1967, 1974, 1977, 1987, 1991, 1997, 2007 and 2017. All rights reserved. “The American Institute of Architects,” “American Institute of Architects,” “AIA,” the AIA Logo, and “AIA Contract Documents” are trademarks of The American Institute of Architects. This draft was produced at 18:57:09 CDT on 05/15/2026 under Subscription No.20240042832 which expires on 07/01/2026, is not for resale, is licensed for one-time use only, and may only be used in accordance with the AIA Contract Documents® Terms of Service. To report copyright violations, e-mail docinfo@aiacontracts.com.
User Notes: (69fcdcac800d4588359ef159)

OWNER *(Signature)*

(Printed name and title)

CONTRACTOR *(Signature)*

(Printed name and title)

DRAFT

AIA Document A101 – 2017. Copyright © 1915, 1918, 1925, 1937, 1951, 1958, 1961, 1963, 1967, 1974, 1977, 1987, 1991, 1997, 2007 and 2017. All rights reserved. "The American Institute of Architects," "American Institute of Architects," "AIA," the AIA Logo, and "AIA Contract Documents" are trademarks of The American Institute of Architects. This draft was produced at 18:57:09 CDT on 05/15/2026 under Subscription No.20240042832 which expires on 07/01/2026, is not for resale, is licensed for one-time use only, and may only be used in accordance with the AIA Contract Documents® Terms of Service. To report copyright violations, e-mail docinfo@aiacontracts.com.
User Notes: (69fcdcac800d4588359ef159)

Additions and Deletions Report for
AIA® Document A101® – 2017

This Additions and Deletions Report, as defined on page 1 of the associated document, reproduces below all text the author has added to the standard form AIA document in order to complete it, as well as any text the author may have added to or deleted from the original AIA text. Added text is shown underlined. Deleted text is indicated with a horizontal line through the original AIA text.

Note: This Additions and Deletions Report is provided for information purposes only and is not incorporated into or constitute any part of the associated AIA document. This Additions and Deletions Report and its associated document were generated simultaneously by AIA software at 18:57:09 CDT on 05/15/2026.

Changes to original AIA text

PAGE 1

AGREEMENT made as of the ~~day of in the year~~ date last signed.

PR-068-24

The ~~Architect~~Design Consultant:

PAGE 2

[- X-] A date set forth in a notice to proceed issued by the Owner.

§ 3.1.1 Notwithstanding the preceding, Contractor shall perform no work under this Contract until receipt of a notice to proceed. Contractor acknowledges and agrees that no minimum amount of work is guaranteed under this Contract and City may elect to issue no notice to proceed. If a notice is issued, the City reserves the right to amend, reduce or cancel the notice in its sole discretion.

PAGE 3

~~**§ 3.3.2** Subject to adjustments of the Contract Time as provided in the Contract Documents, if portions of the Work are to be completed prior to Substantial Completion of the entire Work, the Contractor shall achieve Substantial Completion of such portions by the following dates:~~

~~**§ 4.2 Alternates**~~
~~**§ 4**~~Base Bid: $0.00

Envelope Adjustment: $ 0.00

Additions and Deletions Report for AIA Document A101 – 2017. Copyright © 1915, 1918, 1925, 1937, 1951, 1958, 1961, 1963, 1967, 1974, 1977, 1987, 1991, 1997, 2007 and 2017. All rights reserved. "The American Institute of Architects," "American Institute of Architects," "AIA," the AIA Logo, and "AIA Contract Documents" are trademarks of The American Institute of Architects. This draft was produced at 18:57:09 CDT on 05/15/2026 under Subscription No.20240042832 which expires on 07/01/2026, is not for resale, is licensed for one-time use only, and may only be used in accordance with the AIA Contract Documents® Terms of Service. To report copyright violations, e-mail docinfo@aiacontracts.com.
User Notes: (69fcdcac800d4588359ef159)

Contingency Allowances: $20,000.00

Alternates 1,2,3, and 5: $0.00

Total Contract Sum: $0.00

§ 4.2 Alternates

§4.2.1 Alternates, if any, included in the Contract Sum:

Item	Price

~~**§ 4.2.2** Subject to the conditions noted below, the following alternates may be accepted by the Owner following execution of this Agreement. Upon acceptance, the Owner shall issue a Modification to this Agreement.~~
~~*(Insert below each alternate and the conditions that must be met for the Owner to accept the alternate.)*~~

§ 4.3 Allowances, if any, included in the Contract Sum:

~~**§ 4.3** Allowances, if any, included in the Contract Sum:~~
~~*(Identify each allowance.)*~~

§ 4.3 Contingency Allowance

§4.3.1 Contingency Allowance shall cover cost of material, labor, overhead, profit and other expenses for complete installation of items of additional work as required for a complete, functional project.

§4.3.2 Contingency Allowance shall be used for unforeseen conditions not covered in the construction documents.

PAGE 4

§4.3.3 All extra work under this section must be authorized by the Owner, in writing, prior to procurement of materials or undertaking work

§4.3.4 Upon completion of the Work, the unused portion of the Allowance shall be credited back to the Owner in the form of a Change Order.

§4.3.5 Allowances are subject to the same provision of AIA 201 §7.3.7.

DRAFT

Additions and Deletions Report for AIA Document A101 – 2017. Copyright © 1915, 1918, 1925, 1937, 1951, 1958, 1961, 1963, 1967, 1974, 1977, 1987, 1991, 1997, 2007 and 2017. All rights reserved. "The American Institute of Architects," "American Institute of Architects," "AIA," the AIA Logo, and "AIA Contract Documents" are trademarks of The American Institute of Architects. This draft was produced at 18:57:09 CDT on 05/15/2026 under Subscription No.20240042832 which expires on 07/01/2026, is not for resale, is licensed for one-time use only, and may only be used in accordance with the AIA Contract Documents® Terms of Service. To report copyright violations, e-mail docinfo@aiacontracts.com.
User Notes: (69fcdcac800d4588359ef159)

~~**§ 4.5** Liquidated damages, if any:~~
~~*(Insert terms and conditions for liquidated damages, if any.)*~~

§ 4.5 Liquidated damages

~~**§ 4.6** Other:~~
~~*(Insert provisions for bonus or other incentives, if any, that might result in a change to the Contract Sum.)*~~

ARTICLE 5 PAYMENTS

§ 5.1.1 Based upon Applications for Payment submitted to the ~~Architect~~Design Consultant by the Contractor and Certificates for Payment issued by the ~~Architect~~Design Consultant, the Owner shall make progress payments on account of the Contract Sum to the Contractor as provided below and elsewhere in the Contract Documents.

§ 5.1.2 ~~The~~The period covered by each Application for Payment shall be one calendar month ending on the ~~last day~~25th of the month~~, or as follows:~~.

§ 5.1.3 Provided that an Application for Payment is received by the ~~Architect~~Design Consultant not later than the First day of a month, the Owner shall make payment of the amount certified to the Contractor not later than the Tenth day of the following month. If an Application for Payment is received by the ~~Architect~~Design Consultant after the application date fixed above, payment of the amount certified shall be made by the Owner not later than Thirty (30) days after the ~~Architect~~Design Consultant receives the Application for Payment.

§ 5.1.4 Each Application for Payment shall be based on the most recent schedule of values submitted by the Contractor in accordance with the Contract Documents. The schedule of values shall allocate the entire Contract Sum among the various portions of the Work. The schedule of values shall be prepared in such form, and supported by such data to substantiate its accuracy, as the ~~Architect~~Design Consultant may require. This schedule of values shall be used as a basis for reviewing the Contractor's Applications for Payment.

PAGE 5

.3 That portion of Construction Change Directives that the ~~Architect~~ Design Consultant determines, in the ~~Architect's~~Design Consultant 's professional judgment, to be reasonably justified.

.2 The amount, if any, for Work that remains uncorrected and for which the ~~Architect~~ Design Consultant has previously withheld a Certificate for Payment as provided in Article 9 of AIA Document A201–2017;

.4 For Work performed or defects discovered since the last payment application, any amount for which the ~~Architect~~ Design Consultant may withhold payment, or nullify a Certificate of Payment in whole or in part, as provided in Article 9 of AIA Document A201–2017; and

§ 5.1.6.3 Any Progress Payment shall include partial release of liens for material and labor for previous application for payment amount approved and paid. The DBE Utilization Report shall be included with the pay application.

Five percent (5%) of the first fifty percent (50%) of the completed work and after fifty percent (50%) completion has been accomplished, no further retainage shall be held from the original Contract Sum.

Additions and Deletions Report for AIA Document A101 – 2017. Copyright © 1915, 1918, 1925, 1937, 1951, 1958, 1961, 1963, 1967, 1974, 1977, 1987, 1991, 1997, 2007 and 2017. All rights reserved. "The American Institute of Architects," "American Institute of Architects," "AIA," the AIA Logo, and "AIA Contract Documents" are trademarks of The American Institute of Architects. This draft was produced at 18:57:09 CDT on 05/15/2026 under Subscription No.20240042832 which expires on 07/01/2026, is not for resale, is licensed for one-time use only, and may only be used in accordance with the AIA Contract Documents® Terms of Service. To report copyright violations, e-mail docinfo@aiacontracts.com.
User Notes: (69fcdcac800d4588359ef159)

Increases in the contract sum by Change Order shall also be subject to retainage.

§ 5.1.7.1.1 The following items are not subject to retainage: N/A

~~*(Insert any items not subject to the withholding of retainage, such as general conditions, insurance, etc.)*~~

The net amount of the Retainage shall be equal to two and one half percent (2.5%) of total Contract Sum, as increased or decreased by Change Order

§ 5.1.7.3 ~~Except as set forth in this Section 5.1.7.3, upon Substantial Completion of the Work, the Contractor may submit an Application for Payment that includes the retainage withheld from prior Applications for Payment pursuant to this Section 5.1.7. The Application for Payment submitted at Substantial Completion shall not include retainage as follows:~~

~~*(Insert any other conditions for release of retainage upon Substantial Completion.)*~~

~~**§ 5.1.8** If final completion of the Work is materially delayed through no fault of the Contractor, the Owner shall pay the Contractor any additional amounts in accordance with Article 9 of AIA Document A201–2017.~~If final completion of the work is materially delayed through no fault of the Contractor, the Owner may, at the Owner's sole discretion, without terminating the Contract, release the withheld retention, or any portion thereof, prior to final completion of the work provided the Contractor has complied with § 5.2.2 for the portion of the work for which retainage is being released.

PAGE 6

§ 5.1.~~9~~8 Except with the Owner's prior approval, the Contractor shall not make advance payments to suppliers for materials or equipment which have not been delivered and stored at the site.

§ 5.2.1 Final monthly progress payment, constituting the entire unpaid balance of the Contract Sum, less retainage, shall be made by the Owner to the Contractor when

~~**.1** —~~ the Contractor has fully performed the Contract except for the Contractor's responsibility to correct Work as provided in Article 12 of AIA Document ~~A201–2017, and to satisfy other requirements, if any, which extend beyond final payment; and~~

~~**.2** a final Certificate for Payment has been issued by the Architect.~~

~~**§ 5.2.2** The Owner's final payment to the Contractor shall be made no later than 30 days after the issuance of the Architect's final Certificate for Payment, or as follows:~~

~~**§ 5.3 Interest**~~

~~Payments due and unpaid under the Contract shall bear interest from the date payment is due at the rate stated below, or in the absence thereof, at the legal rate prevailing from time to time at the place where the Project is located.~~

~~*(Insert rate of interest agreed upon, if any.)*~~

~~%~~

~~ARTICLE 6 DISPUTE RESOLUTION~~A201 (including Owner's then-current modifications which may be obtained from the Owner or, alternatively, a copy of which is incorporated in the Project Manual and incorporated by reference herein as a part thereof), and to satisfy other requirements, if any, which extend beyond final payment; and a Certificate of Substantial Completion has been issued by the Design Consultant /Owner and the project accepted.

§ 5.2.2 The final two- and one-half percent (2.5%) of the total Contract Sum retained by the Owner for final payment to the Contractor of retainage will not be paid until proof of publication is submitted and all written claims paid in full. Contractor to submit the following to show that these requirements have been met:

.1 Contractor's Affidavit of Payment of Debts and Claims (AIA form G706, included in contract

Additions and Deletions Report for AIA Document A101 – 2017. Copyright © 1915, 1918, 1925, 1937, 1951, 1958, 1961, 1963, 1967, 1974, 1977, 1987, 1991, 1997, 2007 and 2017. All rights reserved. "The American Institute of Architects," "American Institute of Architects," "AIA," the AIA Logo, and "AIA Contract Documents" are trademarks of The American Institute of Architects. This draft was produced at 18:57:09 CDT on 05/15/2026 under Subscription No.20240042832 which expires on 07/01/2026, is not for resale, is licensed for one-time use only, and may only be used in accordance with the AIA Contract Documents® Terms of Service. To report copyright violations, e-mail docinfo@aiacontracts.com.
User Notes: (69fcdcac800d4588359ef159)

documents)

.1.1 Contractor's Release or Waiver of Liens

.1.2 Releases or Waivers of Liens from Subcontractors and Material and Equipment Suppliers;

.2 Contractor's Affidavit of Release of Liens (AIA form G706A, included in contract documents);

.3 Consent of Surety, if any, to final payment (AIA form G707, included in contract documents);

.4 Any additional close out requirements per the contract documents; and

.5 Notarized Affidavit of Notice of Completion advertisement from publisher.

§ 5.3 Publication of Completion

§ 5.3.1 Contractor shall provide proof of publication of Notice of Completion in a local newspaper once per week for a minimum of three (3) consecutive weeks, as required in the Ala. Code 1975 § 39-1-1 (f).

.1 The Notice of Completion shall read as follows:

STATE OF ALABAMA

COUNTY OF MOBILE

NOTICE OF COMPLETION

In accordance with Chapter I, Title 39, Code of Alabama, 1975, NOTICE IS HEREBY given that _____ [contractor name] has completed the contract for CIP Trimmier Park Lights Upgrade, located at 3600 Alba Club Road Mobile, AL 36605. All persons having any claims for labor, material or otherwise in connection with this project should immediately notify the Real Estate Asset Managment Department, City of Mobile, P. O. Box 1827, Mobile, Alabama 36633-1827.

PAGE 7

§ 5.3.2 Publication of the Notice of Completion shall not begin until the Project has been accepted as Substantially Complete by the City of Mobile.

§ 5.3.2 Final settlement shall not be paid until 30 days after the completion of the notice of publication Ala. Code 1975 § 39-1-1 (f) (3).

ARTICLE 6 DISPUTE RESOLUTION

The ~~Architect~~Design Consultant will serve as the Initial Decision Maker pursuant to Article 15 of AIA Document ~~A201–2017~~A201-2017, unless the parties appoint below another individual, not a party to this Agreement, to serve as the Initial Decision Maker.

~~*(If the parties mutually agree, insert the name, address and other contact information of the Initial Decision Maker, if other than the Architect.)*~~

For any Claim ~~subject to, but not resolved by, mediation pursuant to Article 15 of AIA Document A201–2017, the method of binding dispute resolution shall be as follows:~~, the method of binding dispute resolution shall be litigation in a court of competent jurisdiction.

§ 6.3 Governing Law and Venue

Additions and Deletions Report for AIA Document A101 – 2017. Copyright © 1915, 1918, 1925, 1937, 1951, 1958, 1961, 1963, 1967, 1974, 1977, 1987, 1991, 1997, 2007 and 2017. All rights reserved. "The American Institute of Architects," "American Institute of Architects," "AIA," the AIA Logo, and "AIA Contract Documents" are trademarks of The American Institute of Architects. This draft was produced at 18:57:09 CDT on 05/15/2026 under Subscription No.20240042832 which expires on 07/01/2026, is not for resale, is licensed for one-time use only, and may only be used in accordance with the AIA Contract Documents® Terms of Service. To report copyright violations, e-mail docinfo@aiacontracts.com.
User Notes: (69fcdcac800d4588359ef159)

(Check the appropriate box.)

[ ] Arbitration pursuant to Section 15.4 of AIA Document A201–2017

[ ] Litigation in a court of competent jurisdiction

[ ] Other *(Specify)*

If the Owner and Contractor do not select a method of binding dispute resolution, or do not subsequently agree in writing to a binding dispute resolution method other than litigation, Claims will be resolved by litigation in a court of competent jurisdiction.

ARTICLE 7 TERMINATION OR SUSPENSION

§ 7.1 The Contract may be terminated by the Owner or the Contractor as provided in Article 14 of AIA Document A201–2017.

§ 7.1.1 If the Contract is terminated for the Owner's convenience in accordance with Article 14 of AIA Document A201–2017, then the Owner shall pay the Contractor a termination fee as follows:

(Insert the amount of, or method for determining, the fee, if any, payable to the Contractor following a termination for the Owner's convenience.)

§ 7.2 The Work may be suspended by the Owner as provided in Article 14 of AIA Document A201–2017.

ARTICLE 8 MISCELLANEOUS PROVISIONS

§ 8.1 Where reference is made in this Agreement to a provision of AIA Document A201–2017 or another Contract Document, the reference refers to that provision as amended or supplemented by other provisions of the Contract Documents.

§ 8.2 The Owner's representative:

(Name, address, email address, and other information)

§ 8.3 The Contractor's representative:

(Name, address, email address, and other information)

§ 8.4 Neither the Owner's nor the Contractor's representative shall be changed without ten days' prior notice to the other party.

§ 8.5 Insurance and Bonds

§ 8.5.1 The Owner and the Contractor shall purchase and maintain insurance as set forth in AIA Document A101™–2017, Standard Form of Agreement Between Owner and Contractor where the basis of payment is a Stipulated Sum, Exhibit A, Insurance and Bonds, and elsewhere in the Contract DocumentsThis Agreement shall be governed by the laws of the State of Alabama, and the appropriate venue of any actions arising out of this Agreement shall be a court of proper jurisdiction in Mobile, Alabama.

ARTICLE 7 TERMINATION OR SUSPENSION

§ 7.1 The Contract may be terminated by the Owner or the Contractor as provided in Article 14 of AIA Document A201, General Conditions of the Contract for Construction, including Owner's then-current modifications, a copy of which is incorporated in the contract documents and incorporated by reference herein as a part thereof.

§ 7.2 The Work may be suspended by the Owner as provided in Article 14 of AIA Document A201, General Conditions of the Contract for Construction, including Owner's then-current modifications, a copy of which is incorporated in the contract documents and incorporated by reference herein as a part thereof.

ARTICLE 8 MISCELLANEIOUS PROVISIONS

§ 8.1 Where reference is made in this Agreement to a provision of AIA Document A201 or another Contract Document, the reference refers to that provision as amended or supplemented by other provisions of the Contract Documents. A copy of such amended, revised or supplemental provision is incorporated in the contract documents and hereby incorporated by reference herein as a part thereof.

Additions and Deletions Report for AIA Document A101 – 2017. Copyright © 1915, 1918, 1925, 1937, 1951, 1958, 1961, 1963, 1967, 1974, 1977, 1987, 1991, 1997, 2007 and 2017. All rights reserved. "The American Institute of Architects," "American Institute of Architects," "AIA," the AIA Logo, and "AIA Contract Documents" are trademarks of The American Institute of Architects. This draft was produced at 18:57:09 CDT on 05/15/2026 under Subscription No.20240042832 which expires on 07/01/2026, is not for resale, is licensed for one-time use only, and may only be used in accordance with the AIA Contract Documents® Terms of Service. To report copyright violations, e-mail docinfo@aiacontracts.com.
User Notes: (69fcdcac800d4588359ef159)

§ 8.2 The Owner's representative:

Director, Real Estate and Asset Management

P.O. Box 1827

Mobile, AL 36633-1827

§ 8.3 The Contractor's representative:

_____

_____

_____

§ 8.4 Neither the Owner's nor the Contractor's representative shall be changed without ten (10) days' prior notice to the other party.

§ 8.5 Insurance and Bonds

§ 8.5.1 Liability of Contractor: To the fullest extent permitted by law, Contractor covenants to release, defend, indemnify, hold harmless, protect, and exonerate both the City and its agents, employees, and representatives, from and against any and all liability, claims (direct and indirect), damages, losses, suits, actions, demands, liens, arbitrations, administrative proceedings, awards, judgments, expenses, costs, and attorneys' fees pertaining to personal injury, bodily injury, death, damage to or destruction of property (including any loss of use), economic loss or damage, labor disputes, safety requirements, performance or non-performance of obligations, certifications, property rights of third parties, sickness or disease, which (1) are caused in whole or in part by the Contractor (herein defined to include but not be limited to Contractor's owners, employees, agents, representatives, subcontractors, suppliers, and invitees or other third parties connected with the Contractor as well as the agents or employees of any of them), or (2) arise out of or are related to work undertaken or to be performed by the Contractor, or (3) arise out of or are related to any other act or omission relating to the Contractor, the Contract, the work under the Contract or otherwise undertaken by the Contractor as defined in the parenthetical of (1) above. It is the specific and express intent of the parties to the contract for the foregoing covenants and indemnity obligations to apply to the fullest extent permitted by applicable law, regardless of whether the liability is caused in whole or in part by a party indemnified hereunder, and whether said liability be caused by, or arise out of, any joint, concurrent, or contributory negligence of a party indemnified hereunder. The contractor agrees it is not a design professional within the meaning of § 41-9A-3, Ala. Code (1975).

§ 8.5.1. This section of the Agreement will survive the expiration or termination of the Agreement.

§ 8.5.2 Contractors Insurance

.1 Workmen's Compensation Insurance: - Statutory-amount and coverage as required by all applicable laws, rules or regulations of the State of Alabama and the United States of America, including the U. S. Longshore and Harbor Workers Act and the Jones Act, and "in rem" endorsements if applicable.

.2 Employee's Liability Insurance shall be provided for limits of liability not less than:

Bodily Injury by Accident	$1,000,000 each accident
Bodily Injury by Disease	$1,000,000 each employee

Additions and Deletions Report for AIA Document A101 – 2017. Copyright © 1915, 1918, 1925, 1937, 1951, 1958, 1961, 1963, 1967, 1974, 1977, 1987, 1991, 1997, 2007 and 2017. All rights reserved. "The American Institute of Architects," "American Institute of Architects," "AIA," the AIA Logo, and "AIA Contract Documents" are trademarks of The American Institute of Architects. This draft was produced at 18:57:09 CDT on 05/15/2026 under Subscription No.20240042832 which expires on 07/01/2026, is not for resale, is licensed for one-time use only, and may only be used in accordance with the AIA Contract Documents® Terms of Service. To report copyright violations, e-mail docinfo@aiacontracts.com.
User Notes: (69fcdcac800d4588359ef159)

Bodily Injury by Disease	$1,000,000 each policy

.3 The Contractor shall provide Broad Form (commonly termed Comprehensive) General Liability Insurance (including premises-product-completed operations, independent contractors, and blanket contractual liability), specifically covering the obligations assumed by the Contractor for limits of liability not less than:

Bodily Injury	$1,000,000 each person
	$1,000,000 each occurrence
Property Damage	$1,000,000 each occurrence; or
Bodily Injury and	
Property Damage	$1,000,000 combined single limit

.4 Such comprehensive policy shall include the following:

.1 All liability of the Contractor, for the Contractor's Direct Operations

PAGE 9

.2 Subcontractor's Operations

.3 Completed Operations Cover, thereby meaning any loss which shall occur after the contract has been completed, but which can be traced back to the Contract

.4 General Aggregate Limit of $2,000,000 shall apply on a "Per Project" Basis

.5 Contractual Liability, meaning thereby; any risk assumed by the Contractor under Hold Harmless Agreements or any other assumption of liability

.6 Broad Form Property Damage Coverage, including Completed Operations

.7 Personal Injury Liability, with employee's exclusions removed

.8 Explosion and Collapse Hazard (if applicable)

.5 Commercial/Business Automobile Liability applicable to all automobiles owned, hired, rented or used by the contractor and automobiles not owned by but used on behalf of the contractor. The automobile liability policy must be provided on either ISO form #CA 00 01 (current edition) or an industry equivalent. In the event the contractor's automobiles haul hazardous materials, the Contractor's policy must be amended to include Pollution Liability-Broadened Coverage (CA9948) or equivalent coverage. Coverage must be maintained until the project has been completed. Policy will provide the following minimum limits:

Bodily Injury	$1,000,000 each person
	$1,000,000 each occurrence
Property damage	$1,000,000 each occurrence; or,
Bodily Injury and	
Property damage	$1,000,000 combined single limit

Additions and Deletions Report for AIA Document A101 – 2017. Copyright © 1915, 1918, 1925, 1937, 1951, 1958, 1961, 1963, 1967, 1974, 1977, 1987, 1991, 1997, 2007 and 2017. All rights reserved. "The American Institute of Architects," "American Institute of Architects," "AIA," the AIA Logo, and "AIA Contract Documents" are trademarks of The American Institute of Architects. This draft was produced at 18:57:09 CDT on 05/15/2026 under Subscription No.20240042832 which expires on 07/01/2026, is not for resale, is licensed for one-time use only, and may only be used in accordance with the AIA Contract Documents® Terms of Service. To report copyright violations, e-mail docinfo@aiacontracts.com.
User Notes: (69fcdcac800d4588359ef159)

.6 Umbrella/Excess Liability: $2,000,000 combined single limit each occurrence for bodily injury and/or property damage

.7 Builder's Risk Coverage (Property Insurance): The Contractor shall carry for the City, himself, and all Subcontractors a Builder's Risk Policy to cover the full amount of the Contract during construction, fabrication or erection of any equipment.

.4 The Contractor shall purchase and maintain, in a company or companies lawfully authorized to do business in the jurisdiction in which the Project is located, property insurance written on a builder's risk "all-risk" or equivalent policy form in the amount of the initial Contract Sum, plus value of subsequent Contract Modifications and cost of materials supplied or installed by others, comprising total value for the entire Project at the site on a replacement cost basis. Such property insurance shall be maintained, unless otherwise provided in the Contract Documents or otherwise agreed in writing by all persons and entities who are beneficiaries of such insurance, until final payment has been made, or until no person or entity other than the City has an insurable interest in the property, whichever is later. This insurance shall include interests of the City, the Contractor, Subcontractors, Sub-subcontractors, and the Design Professionals in the Project.

.5 Property insurance shall be on an "all-risk" or equivalent policy form and shall include, without limitation, insurance against the perils of fire (with extended coverage) and physical loss or damage including, without duplication of coverage, theft, vandalism, malicious mischief, collapse, windstorm, falsework, testing and startup, temporary buildings and debris removal including demolition occasioned by enforcement of any applicable legal requirements, and shall cover reasonable compensation for Architect's/Engineer's and Contractor's services and expenses required as a result of such insured loss.

.6 If the property insurance requires deductibles, the Contractor shall pay costs not covered because of such deductibles. Deductibles shall be limited to a maximum of $2,500.00 unless the loss is caused by windstorm; then deductible shall be a maximum of three percent (3%) of the insured value.

.7 This property insurance shall cover the full value of equipment, material, and other portions of the Work stored off the site, and also portions of the Work in transit. There shall be no limits on the value of loss per occurrence.

PAGE 10

.8 A named storm endorsement is required. The deductible shall be a maximum of three percent (3%) of the insured value.

.8 A Surety authorized to do business in the State of Alabama shall furnish the required Insurance.

.9 The standard ACORD™ format shall be provided. The ACORD™ Certificate must be signed or countersigned by a Licensed Resident Agent of the State of Alabama and the agent's name, address and telephone number must appear on the face of the certificate.

.10 The Surety must have a minimum rating of A/Class VI as reported in the latest issue of Best's Key Rating Guide Property-Casualty, published by Alfred M. Best Company, Inc. if the bid price exceeds $50,000.00.

.11 Contractor shall procure and maintain insurance as specified above:

.1 The insurance shall be written for not less than limits of liability specified in the Contract Documents or required by law, whichever coverage is greater. Coverages, whether written on an occurrence or claims-

Additions and Deletions Report for AIA Document A101 – 2017. Copyright © 1915, 1918, 1925, 1937, 1951, 1958, 1961, 1963, 1967, 1974, 1977, 1987, 1991, 1997, 2007 and 2017. All rights reserved. "The American Institute of Architects," "American Institute of Architects," "AIA," the AIA Logo, and "AIA Contract Documents" are trademarks of The American Institute of Architects. This draft was produced at 18:57:09 CDT on 05/15/2026 under Subscription No.20240042832 which expires on 07/01/2026, is not for resale, is licensed for one-time use only, and may only be used in accordance with the AIA Contract Documents® Terms of Service. To report copyright violations, e-mail docinfo@aiacontracts.com.
User Notes: (69fcdcac800d4588359ef159)

made basis, shall be maintained without interruption from the date of commencement of the Work until the date of final payment and termination of any coverage required to be maintained after final payment, and, with respect to the Contractor's completed operations coverage, until the expiration of the period for correction of Work or for such other period for maintenance of completed operations coverage as specified in the Contract Documents.

.2 Certificates of insurance acceptable to the City shall be filed with the City within ten (10) calendar days from date of issuance of contract forms for execution. Contractor shall deliver to the City of Mobile, certificates of insurance certifying the existence and limits of the insurance coverages along with separate policy endorsements.

.3 Contractor shall also be responsible for delivering policy renewal certificates to the City of Mobile, and thereafter upon renewal or replacement of each required policy of insurance.

.4 These certificates and the insurance policies shall contain a provision that coverages afforded under the policies will not be cancelled subject to non-renewal nor material change, or allowed to expire without at least thirty (30) days' (except ten (10) days from non-payment) prior written notice has been given to the City.

.5 An additional certificate evidencing continuation of liability coverage, including coverage for completed operations, shall be submitted with the final Application for Payment and thereafter upon renewal or replacement of such coverage until the expiration of the time. Information concerning reduction of coverage on account of revised limits or claims paid under the General Aggregate, or both, shall be furnished by the Contractor with reasonable promptness.

.12 All policies of insurance, except worker's compensation, shall be endorsed to provide that all such insurances are primary and non-contributing with any other insurance maintained by the City of Mobile and endorsed to waive rights of subrogation in favor of the City of Mobile.

.13 The Contractor shall cause the commercial liability coverage required by the Contract Documents to include (1) the City, the Design Consultant/ Engineer and the Design Consultant's/Engineer's Consultants as additional insureds for claims caused in whole or in part by the Contractor's negligent acts or omissions during the Contractor's operations; and (2) the City as an additional insured for claims caused in whole or in part by the Contractor's negligent acts or omissions during the Contractor's completed operations**.**

§ 8.5.2~~3~~ Bonds The Contractor shall provide bonds as set forth ~~in AIA Document A101™–2017 Exhibit A, and elsewhere in the Contract Documents~~below:

.1 Contractor shall furnish bonds covering faithful performance of the Contract and payment of obligations arising thereunder**.**

~~**§ 8.6** Notice in electronic format, pursuant to Article 1 of AIA Document A201–2017, may be given in accordance with a building information modeling exhibit, if completed, or as otherwise set forth below:~~
~~*(If other than in accordance with a building information modeling exhibit, insert requirements for delivering notice in electronic format such as name, title, and email address of the recipient and whether and how the system will be required to generate a read receipt for the transmission.)*~~
~~**§ 8.7** Other provisions:~~

PAGE 11

.2 Upon the request of any person or entity appearing to be a potential beneficiary of bonds covering payment of obligations arising under the Contract, the Contractor shall promptly furnish a copy of the bonds or shall authorize a copy to be furnished.

.3 The Labor and Material Payment Bond and the Performance Bond shall each be for one hundred percent (100%) of the Contract Sum.

.1 Bond shall be submitted with the executed agreement on provided form(s).

Additions and Deletions Report for AIA Document A101 – 2017. Copyright © 1915, 1918, 1925, 1937, 1951, 1958, 1961, 1963, 1967, 1974, 1977, 1987, 1991, 1997, 2007 and 2017. All rights reserved. "The American Institute of Architects," "American Institute of Architects," "AIA," the AIA Logo, and "AIA Contract Documents" are trademarks of The American Institute of Architects. This draft was produced at 18:57:09 CDT on 05/15/2026 under Subscription No.20240042832 which expires on 07/01/2026, is not for resale, is licensed for one-time use only, and may only be used in accordance with the AIA Contract Documents® Terms of Service. To report copyright violations, e-mail docinfo@aiacontracts.com.
User Notes: (69fcdcac800d4588359ef159)

.2 Power of Attorney is required for both bonds.

.3 A Surety authorized to do business in the State of Alabama shall furnish both bonds.

.4 A Surety licensed to do business in the State of Alabama must execute the bonds.

.5 The Surety must have a minimum rating of A/Class VI as reported in the latest issue of Best's Key Rating Guide Property-Casualty, published by Alfred M. Best Company, Inc., if the bid price exceeds $50,000.00.

.6 The Surety company shall be required to execute AIA Document G-707, "Consent of Surety to Final Payment" prior to Final Payment being made to the Contractor.

§ 8.7 Warranties

Contractor shall provide a minimum one (1) years warranty from the date of substantial completion of all Labor and Materials for the Work covered by this contract, unless otherwise specified. Labor and Material warranties required by other sections of the construction document shall not conflict with this provision. The most stringent warranty provision shall apply.

§ 8.8 Force Majeure

In the event that either party hereto shall be delayed or hindered in or prevented from the performance of any act required hereunder by reason of strikes, lockouts, labor troubles, inability to procure materials, failure of power, restrictive governmental laws or regulations, riots, insurrection, war, Act of God, or other reason of a like nature not the fault of the party delayed in performing work or doing acts required under the terms of this Agreement, then performance of such act shall be excused for the period of the delay and the period for the performance of any such act shall be extended for a period equivalent to the period of such delay.

~~**.2** AIA Document A101™–2017, Exhibit A, Insurance and Bonds~~

.2 AIA Document A201™–2017, General Conditions of the Contract for Construction

~~**.4** Building information modeling exhibit, dated as indicated below:~~
~~*(Insert the date of the building information modeling exhibit incorporated into this Agreement.)*~~
~~**.5** Drawings~~
~~**.6** Specifications~~
~~**.7** Addenda, if any:~~

.3 Drawings- As provided in the City of Mobile CIP Trimmier Park Lights Upgrades Plan Set and Project Manual dated May 20, 2026 and Addenda

.4 Specifications- As provided in the City of Mobile CIP Trimmier Park Lights Upgrades Plan Set and Project Manual dated May 20, 2026 and Addenda

~~*(Check all boxes that apply and include appropriate information identifying the exhibit where*~~

Additions and Deletions Report for AIA Document A101 – 2017. Copyright © 1915, 1918, 1925, 1937, 1951, 1958, 1961, 1963, 1967, 1974, 1977, 1987, 1991, 1997, 2007 and 2017. All rights reserved. "The American Institute of Architects," "American Institute of Architects," "AIA," the AIA Logo, and "AIA Contract Documents" are trademarks of The American Institute of Architects. This draft was produced at 18:57:09 CDT on 05/15/2026 under Subscription No.20240042832 which expires on 07/01/2026, is not for resale, is licensed for one-time use only, and may only be used in accordance with the AIA Contract Documents® Terms of Service. To report copyright violations, e-mail docinfo@aiacontracts.com.
User Notes: (69fcdcac800d4588359ef159)

~~*required.)*~~

~~[ ] AIA Document E204™ 2017, Sustainable Projects Exhibit, dated as indicated below:~~

~~*(Insert the date of the E204-2017 incorporated into this Agreement.)*~~

~~[ ] The Sustainability Plan:~~

~~[ ] Supplementary and other Conditions of the Contract:~~

~~**.9** Other documents, if any, listed below:~~

~~*(List here any additional documents that are intended to form part of the Contract Documents. AIA Document A201™ 2017 provides that the advertisement or invitation to bid, Instructions to Bidders, sample forms, the Contractor's bid or proposal, portions of Addenda relating to bidding or proposal requirements, and other information furnished by the Owner in anticipation of receiving bids or proposals, are not part of the Contract Documents unless enumerated in this Agreement. Any such documents should be listed here only if intended to be part of the Contract Documents.)*~~

~~This Agreement entered into as of the day and year first written above.~~

Exhibit A: Office of Small Business Development Subcontracting and Major Supplier Plan

Exhibit B: Certificate of Liability Insurance

Exhibit C: Performance, Labor and Material Bonds

Exhibit D: E-Verify Documents

Exhibit E: Secretary of State

Exhibit F: Bidding And Contract Requirement Documents

§ 9.2.2 Best Management Practices (BMPs): The Contractor shall be responsible for providing, implementing and maintaining BMPs for sediment and erosion control in full compliance with all applicable Local, State and Federal Codes and Ordinances throughout the contract period. All Work shall be in accordance with the Clean Water Act; the Alabama Water Pollution Control Act; the current version of the Alabama Handbook for Erosion Control, Sediment Control Storm water Management on Construction sites and Urban Areas; and the current version of the Mobile, Alabama City Code Chapter 17 Storm water Management and Flood Control. All Wastewater with oils, grease, paint, mortar, etc., shall be properly contained and disposed of.

§ 9.2.3 Contractor shall comply with all Federal, State and local laws concerning nondiscrimination, including but not limited to City of Mobile Ordinance No. 14-034 which requires, *inter alia*, that all contractors performing work for the City of Mobile not discriminate on the basis of race, creed, color, national origin or disability, require that all subcontractors they engage do the same, and make every reasonable effort to assure that fifteen percent of the work performed under contract be awarded to socially and economically disadvantaged individuals and business entities.

§ 9.2.4 By signing this contract, the contracting parties affirm, for the duration of the agreement, that they will not violate federal immigration law or knowingly employ, hire for employment, or continue to employ an unauthorized alien within the State of Alabama. Furthermore, a contracting party found to be in violation of this provision shall be deemed in breach of the agreement and shall be responsible for all damages resulting therefrom.

§ 9.2.5 Public Contracts with Entities Engaging in certain Boycott Activities

By signing this contract, the Contractor further represents and agrees that it is not currently engaged in, nor will it engage in, any boycott of a person or entity based in or doing business with a jurisdiction with which the State of Alabama can enjoy open trade.

Additions and Deletions Report for AIA Document A101 – 2017. Copyright © 1915, 1918, 1925, 1937, 1951, 1958, 1961, 1963, 1967, 1974, 1977, 1987, 1991, 1997, 2007 and 2017. All rights reserved. "The American Institute of Architects," "American Institute of Architects," "AIA," the AIA Logo, and "AIA Contract Documents" are trademarks of The American Institute of Architects. This draft was produced at 18:57:09 CDT on 05/15/2026 under Subscription No.20240042832 which expires on 07/01/2026, is not for resale, is licensed for one-time use only, and may only be used in accordance with the AIA Contract Documents® Terms of Service. To report copyright violations, e-mail docinfo@aiacontracts.com.
User Notes: (69fcdcac800d4588359ef159)

§ 9.2.6 Severability Clause

In case any one or more of the provisions contained in this Agreement shall for any reason be held to be invalid, illegal or unenforceable in any respect, such invalidity, illegality or unenforceability shall not affect any other provisions of this Agreement, but this Agreement shall be construed as if such invalid or illegal or unenforceable provision had never been contained herein. Upon such determination that any term or other provision is invalid, illegal or unenforceable, the court or other tribunal making such determination is authorized and instructed to modify this Agreement so as to effect the original intent of the parties as closely as possible so that the transactions and agreements contemplated herein are consummated as originally contemplated to the fullest extent possible.

§ 9.2.7 Non-Agency Clause

Contractor, in the performance of its operations and obligations hereunder, shall not be deemed to be an agent of City but shall be deemed to be an independent Contractor in every respect and shall take all steps at its own expense, as City may from time to time request, to indicate that it is an independent Contractor. City does not and will not assume any responsibility for the means by which or the manner in which the services by Contractor provided for herein are performed, but on the contrary, Contractor shall be wholly responsible therefore.

PAGE 13

ARTICLE 10 USE OF CITY PROJECT MANAGEMENT SOFTWARE (E-BUILDER)

§ 10.1 The City of Mobile utilizes e-Builder, a cloud-based Construction Project Management Information System (PMIS) that streamlines every aspect of construction projects, including planning, estimating, document control, construction, and closeout. The Contractor shall participate in a City-provided training session on the use of e-Builder. This training is mandatory for all personnel responsible for submitting schedules, pay applications, submittals, Requests for Information (RFIs), and other project-related documentation through the e-Builder platform. Training will be provided by the City at no cost to the Contractor. Failure to complete the required training may be considered a material breach of this Agreement, and may delay processing of project documentation.

This Agreement entered into as of the day and year of last execution:

CONTRACTOR:

_____

NAME, TITLE

STATE OF _____)

Additions and Deletions Report for AIA Document A101 – 2017. Copyright © 1915, 1918, 1925, 1937, 1951, 1958, 1961, 1963, 1967, 1974, 1977, 1987, 1991, 1997, 2007 and 2017. All rights reserved. "The American Institute of Architects," "American Institute of Architects," "AIA," the AIA Logo, and "AIA Contract Documents" are trademarks of The American Institute of Architects. This draft was produced at 18:57:09 CDT on 05/15/2026 under Subscription No.20240042832 which expires on 07/01/2026, is not for resale, is licensed for one-time use only, and may only be used in accordance with the AIA Contract Documents® Terms of Service. To report copyright violations, e-mail docinfo@aiacontracts.com.
User Notes: (69fcdcac800d4588359ef159)

DRAFT

COUNTY OF_____)

Before me, the undersigned a Notary Public in and for said County and State, personally appeared_____ __ and after being duly sworn, did depose and say that he, as such officer and with full authority, signed the above and foregoing voluntarily as the act of said corporation on the day the same bears date.

Sworn to and subscribed for me this_____ day of_____, 2026.

_____

NOTARY PUBLIC

My Commission Expires: _____

PAGE 14

CITY OF MOBILE

By:_____

Spiro N. Cheriogotis, Mayor

Date:_____

ATTEST:

_____

City Clerk

PAGE 15

-

Variable Information

PAGE 1

Additions and Deletions Report for AIA Document A101 – 2017. Copyright © 1915, 1918, 1925, 1937, 1951, 1958, 1961, 1963, 1967, 1974, 1977, 1987, 1991, 1997, 2007 and 2017. All rights reserved. "The American Institute of Architects," "American Institute of Architects," "AIA," the AIA Logo, and "AIA Contract Documents" are trademarks of The American Institute of Architects. This draft was produced at 18:57:09 CDT on 05/15/2026 under Subscription No.20240042832 which expires on 07/01/2026, is not for resale, is licensed for one-time use only, and may only be used in accordance with the AIA Contract Documents® Terms of Service. To report copyright violations, e-mail docinfo@aiacontracts.com.
User Notes: (69fcdcac800d4588359ef159)

DRAFT

AGREEMENT made as of the ~~day of in the year~~ date last signed.

City of Mobile

Real Estate Asset Management Department

P. O. Box 1827
Mobile, AL 36633-1827

_____

_____

_____

CIP Trimmier Park Lights Upgrade

3600 Alba Club Road
Mobile, AL 36605

F584-001 UPGRADING THE LIGHTING SYSTEM FOR SAFETY IN THE FOOTBALL FIELD AREA

Jaguar Consulting, LLC

8658 Capital Drive North
Mobile, AL 36695

(251)307-1037

PAGE 3

[X] By the following date: August 31, 2026

PAGE 4

Any delay in the completion of the Work as provided for in the Contract Documents will cause inconvenience to the public and loss and damage to the Owner in interest, and in additional administrative, architectural, inspection, and supervision charges. Therefore, a time charge equal to ($250.00) per calendar day will be made against the Contractor for the entire period that any part of the Work that remains uncompleted or any required closeout documents that are not acceptably submitted for more than thirty (30) days after the time specified for the Substantial Completion of the Work, the amount of which shall be deducted by the Owner, and shall be retained by the Owner out of monies otherwise due the Contractor in the final payment, not as a penalty, but as liquidated damages sustained.

§ 5.1.3 Provided that an Application for Payment is received by the ~~Architect~~Design Consultant not later than the First day of a month, the Owner shall make payment of the amount certified to the Contractor not later than the Tenth day of the following month. If an Application for Payment is received by the ~~Architect~~Design Consultant after the application date fixed above, payment of the amount certified shall be made by the Owner not later than Thirty (30) days after the ~~Architect~~Design Consultant receives the Application for Payment.

PAGE 5

Five percent (5%) of the first fifty percent (50%) of the completed work and after fifty percent (50%) completion has been accomplished, no further retainage shall be held from the original Contract Sum. Increases in the contract sum by Change Order shall also be subject to

Additions and Deletions Report for AIA Document A101 – 2017. Copyright © 1915, 1918, 1925, 1937, 1951, 1958, 1961, 1963, 1967, 1974, 1977, 1987, 1991, 1997, 2007 and 2017. All rights reserved. "The American Institute of Architects," "American Institute of Architects," "AIA," the AIA Logo, and "AIA Contract Documents" are trademarks of The American Institute of Architects. This draft was produced at 18:57:09 CDT on 05/15/2026 under Subscription No.20240042832 which expires on 07/01/2026, is not for resale, is licensed for one-time use only, and may only be used in accordance with the AIA Contract Documents® Terms of Service. To report copyright violations, e-mail docinfo@aiacontracts.com.
User Notes: (69fcdcac800d4588359ef159)

retainage.

§ 5.1.7.1.1 The following items are not subject to retainage: N/A

The net amount of the Retainage shall be equal to two
and one half percent (2.5%) of total Contract Sum, as increased or decreased by
Change Order

PAGE 6

In accordance with Chapter I, Title 39, Code of Alabama, 1975, NOTICE IS HEREBY given that _____ [contractor name] has completed the contract for CIP Trimmier Park Lights Upgrade, located at 3600 Alba Club Road Mobile, AL 36605. All persons having any claims for labor, material or otherwise in connection with this project should immediately notify the Real Estate Asset Managment Department, City of Mobile, P. O. Box 1827, Mobile, Alabama 36633-1827.

PAGE 7

~~[ ] Litigation in a court of competent jurisdiction~~

PAGE 11

Contractor shall provide a minimum one (1) years warranty from the date of substantial completion of all Labor and Materials for the Work covered by this contract, unless otherwise specified. Labor and Material warranties required by other sections of the construction document shall not conflict with this provision. The most stringent warranty provision shall apply.

DRAFT

Additions and Deletions Report for AIA Document A101 – 2017. Copyright © 1915, 1918, 1925, 1937, 1951, 1958, 1961, 1963, 1967, 1974, 1977, 1987, 1991, 1997, 2007 and 2017. All rights reserved. "The American Institute of Architects," "American Institute of Architects," "AIA," the AIA Logo, and "AIA Contract Documents" are trademarks of The American Institute of Architects. This draft was produced at 18:57:09 CDT on 05/15/2026 under Subscription No.20240042832 which expires on 07/01/2026, is not for resale, is licensed for one-time use only, and may only be used in accordance with the AIA Contract Documents® Terms of Service. To report copyright violations, e-mail docinfo@aiacontracts.com.
User Notes: (69fcdcac800d4588359ef159)

SECTION 00600

BONDS, CERTIFICATES AND AFFIDAVITS

PART 1 GENERAL

This section includes the Bond Forms and Certificates that are to be used on this Project. No other forms will be accepted. Forms may be obtained from the Architectural Engineering Department, City of Mobile, telephone number 251-208-7454.

1.1 FORMS

A. PERFORMANCE BOND. Owner's modified Performance Bond form.

B. LABOR AND MATERIAL PAYMENT BOND. Owner's modified Payment Bond form.

C. CERTIFICATE OF LIABILITY INSURANCE. (Sample COI)

D. APPLICATION AND CERTIFICATION FOR PAYMENT - AIA Document G702 and AIA Document G703 and DBE Utilization Report

E. CONTRACTOR'S AFFIDAVIT OF PAYMENT OF DEBTS AND CLAIMS - AIA Document G706

F. CONTRACTOR'S AFFIDAVIT OF RELEASE OF LIENS - AIA Document G706A.

G. CONSENT OF SURETY TO FINAL PAYMENT - AIA Document G707

H. DBE COMPLIANCE DBE UTILIZATION REPORT

I. E-Verify Documentation (Sample)

J. Request for Taxpayer Identification Number and Certification, W-9 Form, and City of Mobile Vendor Information Form

PERFORMANCE BOND

Any singular reference to Contractor, Surety, Owner or other Party shall be considered plural where applicable.

KNOW ALL MEN BY THESE PRESENTS: That the Contractor,_____., _____,_____, hereinafter called the Principal, and _____ _____, hereinafter called the Surety, are held and firmly bound unto the **City of Mobile, P. O. Box 1827, Mobile, AL 36633**, hereinafter called the Owner, in the penal sum of (written amount) and xx/100 Dollars ($XX,XXX.00) for payment of which we bind ourselves, our heirs, executors, administrators, successors, and assigns for the faithful performance of a certain written Contract dated the _____ day of _____, 2026 entered into between the Principal and the City of Mobile for furnishing all labor, material, equipment and insurance and performing all Work required to properly complete Trimmier Park – Lights Upgrades, 3600 Alba Club Road, Mobile, Alabama 36605, PR-068-24, a copy of which said Contract is incorporated herein by reference and is made a part hereof as if fully copied herein.

NOW, THEREFORE, the condition of this obligation is such that if the Principal shall faithfully perform the terms and conditions of the Contract in all respects on its part and shall fully pay all obligations incurred in connection with the performance of such Contract on account of labor and materials used in connection therewith, and all such other obligations of every form, nature and character, and shall save harmless the Owner from all and any liability of every nature, kind and character which may be incurred in connection with the performance or fulfillment of such Contract or other such and liability resulting from negligence or otherwise on the part of such Principal and further save harmless the Owner from all cost and damage which may be suffered by reason of the failure to fully and completely perform said contract and shall fully reimburse and repay the Owner for all expenditures of every kind, character, and description which may be incurred by the Owner in making good any and every default which may exist on the part of the Principal in connection with the performance of said Contract; and further that the Principal shall pay all lawful claims of all persons, firms, partnerships, or corporations for all labor performed and material furnished in connection with the performance of the Contract, and that the failure to do so with such persons, firms, partnerships or corporations shall give them a direct obligation; and provided, however, that no suit, action, or proceedings by reason of any default whatever shall be brought on this bond after two years from the date on which the final payment on the Contract falls due, and provided, further, that if any alterations or additions which may be made under the Contract, or in the work to be done under it, or the giving by the Owner of any extensions of time for the performance of the Contract or any other forbearance being expressly waived. This obligation shall remain in full force and effect until the performance of all covenants, terms and conditions herein stipulated and after such performance, it shall become null and void.

In addition to any other legal mode of service, service of summons, and other process in civil actions brought in Mobile County may be had on the Contractor or the Surety on the bond by leaving a copy of the summons and complaint or other pleading or process with the Mayor of the City of Mobile which shall bind the principal Contractor and Surety to the mode of service above described and that the service shall be the same as personal service on the contractor or surety. This Bond is given pursuant to the terms of Alabama Code, Title 39-1-1, et. al., As Amended.

EXECUTED IN FOUR (4) COUNTERPARTS.

SIGNED, SEALED AND DELIVERED this ____ day of _____, 2026.

CONTRACTOR AS PRINCIPAL
Company: _____
(Corporate Seal)

By: _____
(Signature)
Name and Title: _____

SURETY
Company:_____
(Corporate Seal)

By: _____
(Signature)
Name and Title: _____

Resident Agent: _____
(Signature)
Name and Title: _____
Company Name:_____
Address: _____
_____
Phone and Fax: _____

Owner's Representative: Carleen Stout
REAM Director
PO Box 1827
Mobile, AL 36633
251-208-7454

LABOR AND MATERIAL PAYMENT BOND

Any singular reference to Contractor, Surety, Owner or other Party shall be considered plural where applicable.

KNOW ALL MEN BY THESE PRESENTS: That the Contractor**,** _____,XXXXX, _____, _____ , as Principal, and _____ _____, as Surety, are held and firmly bound unto the **City of Mobile, P. O. Box 1827, Mobile, AL 36633** (hereinafter called the "Obligee") in the penal sum of _____(written amount) and xx/100 ($XX,XXX.00) lawful money of the United States, for the payment of which sum well and truly to be made we bind ourselves, our heirs, personal representatives, successors, and assigns, jointly and severally, firmly by these presents.

WHEREAS, said Principal has entered into a certain Contract with said Obligee, dated the ____ day of _____, 2026 (hereinafter called the "Contract") for furnishing all labor, material, equipment and insurance and perform all work required to properly complete Trimmier Park – Lights Upgrades, 3600 Alba Club Road, Mobile, Alabama 36605, PR-068-24, which**, THEREFORE, THE CONDITION OF THIS OBLIGATION IS SUCH** that if said Principal and all subcontractors to whom any portion of work provided for in said Contract is sublet and all assignees of said Principal and of such subcontractors shall promptly make payments to all persons supplying him or them with labor, materials or supplies for or in the prosecution of the work provided for in such Contract, or in any amendment or extension of or additions to said Contract, and for the payment of reasonable attorney's fees, incurred by the claimant or claimants in suits on each bond, then the above obligations shall be void; otherwise to remain in full force and effect. **PROVIDED,** however, that this bond is subject to the following conditions and limitations.

(a) Any person, firm or corporation that has furnished labor, materials or supplies for or in the prosecution of the work provided for in said contract shall have a direct right of action against the Principal and Surety on this bond, which right of action shall be asserted in a proceeding instituted in the County in which the work provided for in said Contract is to be performed or in any county in which said Principal and Surety does business. Such right of action shall be asserted in a proceeding instituted in the name of the claimant or claimants for his or their use and benefit against said Principal and Surety or either of them (but not later than one year after the final settlement of said Contract) in which action such claim or claims shall be adjudicated and judgment rendered thereon.

(b) The Principal and Surety hereby designate and appoint **_____ Attorney-In-Fact,** as the agent of each of them to receive and accept service of process or other pleading issued or filed in any proceeding instituted on this bond and hereby consent that such service shall be the same as personal service on the Principal and/or Surety. In addition to any other legal mode of service, service of summons, and other process in civil actions brought in Mobile County may be had on the Contractor or the Surety on the bond by leaving a copy of the summons and complaint or other pleading or process with the Mayor of the City of Mobile which shall bind the principal Contractor and Surety to the mode of service above described and that the service shall be the same as personal service on the contractor or surety.

(c) The Surety shall not be liable hereunder for damage or compensation recoverable under any Workmen's Compensation or Employer's Liability Statute.

(d) In no event shall the Surety be liable for a greater sum than the penalty of this bond, or subject to any suit, action or proceeding thereon that is instituted later than two years after the final settlement of said Contract.

(e) This bond is given pursuant to the terms of Alabama Code, Title 39-1-1, et. al., As Amended.

EXECUTED IN FOUR (4) COUNTERPARTS.

SIGNED, SEALED AND DELIVERED this ____ day of _____, 2026

CONTRACTOR AS PRINCIPAL
Company: _____
(Corporate Seal)

By: _____
(Signature)

Name and Title:
_____

SURETY
Company: _____
(Corporate Seal)

By: _____
(Signature)

Name and Title:_____

Resident Agent: _____
(Signature)
Name and Title: _____
Company Name: _____
Address: _____
_____
Phone and Fax: _____

Owner's Representative: Carleen Stout
REAM Director
PO Box 1827
Mobile, AL 36633
251-208-7454

CERTIFICATE OF LIABILITY INSURANCE

DATE (MM/DD/YYYY)

THIS CERTIFICATE IS ISSUED AS A MATTER OF INFORMATION ONLY AND CONFERS NO RIGHTS UPON THE CERTIFICATE HOLDER. THIS CERTIFICATE DOES NOT AFFIRMATIVELY OR NEGATIVELY AMEND, EXTEND OR ALTER THE COVERAGE AFFORDED BY THE POLICIES BELOW. THIS CERTIFICATE OF INSURANCE DOES NOT CONSTITUTE A CONTRACT BETWEEN THE ISSUING INSURER(S), AUTHORIZED REPRESENTATIVE OR PRODUCER, AND THE CERTIFICATE HOLDER.

IMPORTANT: If the certificate holder is an ADDITIONAL INSURED, the policy(ies) must have ADDITIONAL INSURED provisions or be endorsed. If SUBROGATION IS WAIVED, subject to the terms and conditions of the policy, certain policies may require an endorsement. A statement on this certificate does not confer rights to the certificate holder in lieu of such endorsement(s).

PRODUCER	CONTACT NAME:	
	PHONE (A/C, No, Ext):	FAX (A/C, No):
	E-MAIL ADDRESS:	
	INSURER(S) AFFORDING COVERAGE	NAIC #
	INSURER A :	
INSURED	INSURER B :	
	INSURER C :	
	INSURER D :	
	INSURER E :	
	INSURER F :	

COVERAGES **CERTIFICATE NUMBER:** INFORMATION ONLY **REVISION NUMBER:**

THIS IS TO CERTIFY THAT THE POLICIES OF INSURANCE LISTED BELOW HAVE BEEN ISSUED TO THE INSURED NAMED ABOVE FOR THE POLICY PERIOD INDICATED. NOTWITHSTANDING ANY REQUIREMENT, TERM OR CONDITION OF ANY CONTRACT OR OTHER DOCUMENT WITH RESPECT TO WHICH THIS CERTIFICATE MAY BE ISSUED OR MAY PERTAIN, THE INSURANCE AFFORDED BY THE POLICIES DESCRIBED HEREIN IS SUBJECT TO ALL THE TERMS, EXCLUSIONS AND CONDITIONS OF SUCH POLICIES. LIMITS SHOWN MAY HAVE BEEN REDUCED BY PAID CLAIMS.

INSR LTR	TYPE OF INSURANCE	ADDL INSD	SUBR WVD	POLICY NUMBER	POLICY EFF (MM/DD/YYYY)	POLICY EXP (MM/DD/YYYY)	LIMITS	
	[X] COMMERCIAL GENERAL LIABILITY						EACH OCCURRENCE	$ 1,000,000
	[ ] CLAIMS-MADE [X] OCCUR						DAMAGE TO RENTED PREMISES (Ea occurrence)	$ 1,000,000
	[X] Contractual Liability						MED EXP (Any one person)	$
	[ ]	X	X				PERSONAL & ADV INJURY	$ 1,000,000
	GEN'L AGGREGATE LIMIT APPLIES PER:						GENERAL AGGREGATE	$ 2,000,000
	[ ] POLICY [X] PRO-JECT [ ] LOC			INFORMATION ONLY			PRODUCTS - COMP/OP AGG	$
	[ ] OTHER:							$
	AUTOMOBILE LIABILITY						COMBINED SINGLE LIMIT (Ea accident)	$ 1,000,000
	[X] ANY AUTO						BODILY INJURY (Per person)	$ 1,000,000
	[ ] OWNED AUTOS ONLY [ ] SCHEDULED AUTOS						BODILY INJURY (Per accident)	$ 1,000,000
	[ ] HIRED AUTOS ONLY [ ] NON-OWNED AUTOS ONLY	X	X				PROPERTY DAMAGE (Per accident)	$ 1,000,000
	[ ] [ ]							$
	[X] UMBRELLA LIAB [X] OCCUR						EACH OCCURRENCE	$ 1,000,000
	[ ] EXCESS LIAB [ ] CLAIMS-MADE	X	X				AGGREGATE	$ 2,000,000
	[ ] DED [ ] RETENTION $							$
	WORKERS COMPENSATION AND EMPLOYERS' LIABILITY						[X] PER STATUTE [ ] OTH-ER	1,000,000
	ANYPROPRIETOR/PARTNER/EXECUTIVE OFFICER/MEMBER EXCLUDED? (Mandatory in NH)		X				E.L. EACH ACCIDENT	$ 1,000,000
	If yes, describe under DESCRIPTION OF OPERATIONS below						E.L. DISEASE - EA EMPLOYEE	$ 1,000,000
							E.L. DISEASE - POLICY LIMIT	$ 1,000,000

INFORMATION ONLY

DESCRIPTION OF OPERATIONS / LOCATIONS / VEHICLES (ACORD 101, Additional Remarks Schedule, may be attached if more space is required)

PROJECT NAME: Trimmier Park Lights Upgrade PROJECT NUMBER:Pr-068-24
LOCATION: 3600 Alba Club Road, Mobile AL 36605
City of Mobile must be notified of cancellation within 30 days, and non payment within 10 days. City of Mobile is included as an Additional Insured in respect to General Liability, Automobile Liability and Umbrella Liability. All policies, except workers compensation, shall be Primary and Non-contributory with any other insurance in force or which may be purchased by Additional Insured. Waiver of Subrogation applies in favor of City of Mobile with respect to General Liability, Automobile Liability, Umbrella Liability, and Workers Compensation and Employer's Liability. [ADDITIONAL ENDORSEMENTS REQURIED-SEE CONTRACT]

CERTIFICATE HOLDER

The City of Mobile
Real Estate Asset Management
P.O. Box 1827
Mobile, AL 36633-1827

CANCELLATION

SHOULD ANY OF THE ABOVE DESCRIBED POLICIES BE CANCELLED BEFORE THE EXPIRATION DATE THEREOF, NOTICE WILL BE DELIVERED IN ACCORDANCE WITH THE POLICY PROVISIONS.

AUTHORIZED REPRESENTATIVE

© 1988-2015 ACORD CORPORATION. All rights reserved.

APPLICATION AND CERTIFICATION FOR PAYMENT

AIA DOCUMENT G702 PAGE ONE OF PAGES

TO OWNER City of Mobile
P. O. Box 1827
Mobile, Alabama 36633-1827

PROJECT:

APPLICATION NO:

Distribution to:
☐ OWNER
☐ ARCHITECT
☐ CONTRACTOR
☐
☐

PERIOD TO:

FROM CONTRACTOR:

VIA ARCHITECT:

PROJECT NO:

CONTRACT FOR:

CONTRACT DATE:

CONTRACTOR'S APPLICATION FOR PAYMENT

Application is made for payment, as shown below, in connection with the Contract.
Continuation Sheet, AIA Document G703, is attached.

1. ORIGINAL CONTRACT SUM		$
2. Net change by Change Orders		$
3. CONTRACT SUM TO DATE (Line 1 ± 2)		$
4. TOTAL COMPLETED & STORED TO DATE (Column G on G703)		$
5. RETAINAGE:		
a. _____ % of Completed Work (Column D + E on G703)	$	
b. _____ % of Stored Material (Column F on G703)	$	
Total Retainage (Lines 5a + 5b or Total in Column I of G703)		$
6. TOTAL EARNED LESS RETAINAGE (Line 4 Less Line 5 Total)		$
7. LESS PREVIOUS CERTIFICATES FOR PAYMENT (Line 6 from prior Certificate)		$
8. CURRENT PAYMENT DUE		$
9. BALANCE TO FINISH, INCLUDING RETAINAGE (Line 3 less Line 6)		$

CHANGE ORDER SUMMARY	ADDITIONS	DEDUCTIONS
Total changes approved in previous months by Owner		
Total approved this Month		
TOTALS		
NET CHANGES by Change Order		

The undersigned Contractor certifies that to the best of the Contractor's knowledge, information and belief the Work covered by this Application for Payment has been completed in accordance with the Contract Documents, that all amounts have been paid by the Contractor for Work for which previous Certificates for Payment were issued and payments received from the Owner, and that current payment shown herein is now due.

CONTRACTOR:

By: _____ Date: _____

State of: County of:
Subscribed and sworn to before me this day of
Notary Public:
My Commission expires:

ARCHITECT'S CERTIFICATE FOR PAYMENT

In accordance with the Contract Documents, based on on-site observations and the data comprising the application, the Architect certifies to the Owner that to the best of the Architect's knowledge, information and belief the Work has progressed as indicated, the quality of the Work is in accordance with the Contract Documents, and the Contractor is entitled to payment of the AMOUNT CERTIFIED.

AMOUNT CERTIFIED . . . . . $ _____

(Attach explanation if amount certified differs from the amount applied. Initial all figures on this Application and onthe Continuation Sheet that are changed to conform with the amount certified.)
ARCHITECT:

By: _____ Date: _____

This Certificate is not negotiable. The AMOUNT CERTIFIED is payable only to the Contractor named herein. Issuance, payment and acceptance of payment are without prejudice to any rights of the Owner or Contractor under this Contract.

AIA DOCUMENT G702 · APPLICATION AND CERTIFICATION FOR PAYMENT · 1992 EDITION · AIA · ©1992 THE AMERICAN INSTITUTE OF ARCHITECTS, 1735 NEW YORK AVE., N.W., WASHINGTON, DC 20006-5292
Users may obtain validation of this document by requesting a completed AIA Document D401 - Certification of Document's Authenticity from the Licensee.

CONTINUATION SHEET

AIA DOCUMENT G703

PAGE OF PAGES

AIA Document G702, APPLICATION AND CERTIFICATION FOR PAYMENT, containing Contractor's signed certification is attached.

In tabulations below, amounts are stated to the nearest dollar.

Use Column I on Contracts where variable retainage for line items may apply.

APPLICATION NO:

APPLICATION DATE:

PERIOD TO:

ARCHITECT'S PROJECT NO:

A	B	C	D	E	F	G		H	I
ITEM NO.	DESCRIPTION OF WORK	SCHEDULED VALUE	WORK COMPLETED		MATERIALS PRESENTLY STORED (NOT IN D OR E)	TOTAL COMPLETED AND STORED TO DATE (D+E+F)	% (G ÷ C)	BALANCE TO FINISH (C - G)	RETAINAGE (IF VARIABLE RATE)
			FROM PREVIOUS APPLICATION (D + E)	THIS PERIOD					
	GRAND TOTALS								

Users may obtain validation of this document by requesting of the license a completed AIA Document D401 - Certification of Document's Authenticity

AIA DOCUMENT G703 · CONTINUATION SHEET FOR G702 · 1992 EDITION · AIA · ©1992
THE AMERICAN INSTITUTE OF ARCHITECTS, 1735 NEW YORK AVENUE, N.W. WASHINGTON, D.C. 20006-5232

OFFICE OF SUPPLIER DIVERSITY

CITY OF MOBILE

DBE Compliance

DBE UTILIZATION REPORT

Return to Office of Supplier Diversity
Via email: archnique.kidd@cityofmobile.org
or
P.O. Box 1948
Mobile, AL 36633

CONTRACTOR:	Certified DBE: YES NO	Contract Start Date:
DESCRIPTION:		Estimated Completion Date:

This report is for the month of: (CHECK ONE):

JAN FEB MARCH APR MAY JUNE JULY AUG SEPT OCT NOV DEC FINAL _____

Original Contract Amount	Total Amount of Contract Changes (change orders or amendments)	Final Contract Amount (include contract changes)	Payments to Date from City of Mobile	OFFICE USE ONLY (Verification)
$	$	$	$	

Instructions: List all DBEs utilized on the contract, whether or not the firms were originally listed for DBE goal credit. List actual amount paid to each DBE firm. If the established Percentage is not being met, please include a narrative description of the progress being made in DBE participation.

DBE SUBCONTRACTOR	DBE DESCRIPTION OF WORK	DBE SUBCONTRACT AMOUNT	DBE PAYMENTS THIS REPORT	PAYMENTS TO DATE	OFFICE USE ONLY (Verification)
		$	$	$	
		$	$	$	
		$	$	$	
		$	$	$	
TOTALS		$	$	$	

I HEREBY CERTIFY THAT THE INFORMATION CONTAINED HEREIN IS TRUE AND CORRECT. SUPPORTING DOCUMENTATION IS ON FILE AND IS AVAILABLE FOR INSPECTION BY CITY OF MOBILE OFFICE OF SUPPLIER DIVERSITY PERSONNEL AT ANY TIME.

PRINT NAME: _____

SIGNATURE: _____, _____ ___/___/____
(Title) (Date)

AIA® Document G706® – 1994

Contractor's Affidavit of Payment of Debts and Claims

PROJECT: *(Name and address)*
CIP Trimmier Park Lights Upgrade
3600 Alba Club Road
Mobile, AL 36605

TO OWNER: *(Name and address)*
City of Mobile
City of Mobile Real Estate Asset Management
Department P. O. Box 1827
Mobile, AL 36633-1827

ARCHITECT'S PROJECT NUMBER:
PR-068-24

CONTRACT FOR:

CONTRACT DATED:
05-13-2026

OWNER:[ ]
ARCHITECT:[ ]
CONTRACTOR:[ ]
SURETY:[ ]
OTHER:[ ]

STATE OF:
COUNTY OF:

The undersigned hereby certifies that, except as listed below, payment has been made in full and all obligations have otherwise been satisfied for all materials and equipment furnished, for all work, labor, and services performed, and for all known indebtedness and claims against the Contractor for damages arising in any manner in connection with the performance of the Contract referenced above for which the Owner or Owner's property might in any way be held responsible or encumbered.

EXCEPTIONS:

SUPPORTING DOCUMENTS ATTACHED HERETO:

1. Consent of Surety to Final Payment. Whenever Surety is involved, Consent of Surety is required. AIA Document G707, Consent of Surety, may be used for this purpose

Indicate Attachment [ ] Yes [ ] No

The following supporting documents should be attached hereto if required by the Owner:

1. Contractor's Release or Waiver of Liens, conditional upon receipt of final payment.

2. Separate Releases or Waivers of Liens from Subcontractors and material and equipment suppliers, to the extent required by the Owner, accompanied by a list thereof.

3. Contractor's Affidavit of Release of Liens (AIA Document G706A).

CONTRACTOR: *(Name and address)*

CONTRACTOR'S Authorized Representative *(Signature)*

(Printed name and title)

Date

Subscribed and sworn to before me on this date:

Notary Public:
My Commission Expires:

DRAFT

AIA Document G706 – 1994. Copyright © 1970 and 1994. All rights reserved. "The American Institute of Architects," "American Institute of Architects," "AIA," the AIA Logo, and "AIA Contract Documents" are trademarks of The American Institute of Architects. This draft was produced at 18:24:29 CDT on 05/13/2026 under Subscription No.20240042832 which expires on 07/01/2026, is not for resale, is licensed for one-time use only, and may only be used in accordance with the AIA Contract Documents® Terms of Service. To report copyright violations, e-mail docinfo@aiacontracts.com.
User Notes: (6a04c1b3854aaf76014a5c41)

AIA® Document G706®A – 1994

Contractor's Affidavit of Release of Liens

PROJECT: *(Name and address)*
CIP Trimmier Park Lights Upgrade
3600 Alba Club Road
Mobile, AL 36605

TO OWNER: *(Name and address)*

City of Mobile
City of Mobile Real Estate Asset Management Department P. O. Box 1827
Mobile, AL 36633-1827

ARCHITECT'S PROJECT NUMBER :
PR-068-24

CONTRACT FOR:

CONTRACT DATED:
05-13-2026

OWNER: [ ]
ARCHITECT: [ ]
CONTRACTOR: [ ]
SURETY: [ ]
OTHER: [ ]

STATE OF:
COUNTY OF:

The undersigned hereby certifies that to the best of the undersigned's knowledge, information and belief, except as listed below, the Releases or Waivers of Lien attached hereto include the Contractor, all Subcontractors, all suppliers of materials and equipment, and all performers of Work, labor or services who have or may have liens or encumbrances or the right to assert liens or encumbrances against any property of the Owner arising in any manner out of the performance of the Contract referenced above.

EXCEPTIONS:

SUPPORTING DOCUMENTS ATTACHED HERETO:

1. Contractor's Release or Waiver of Liens, conditional upon receipt of final payment.
2. Separate Releases or Waivers of Liens from Subcontractors and material and equipment suppliers, to the extent required by the Owner, accompanied by a list thereof.

CONTRACTOR: *(Name and address)*

CONTRACTOR'S Authorized Representative *(Signature)*

(Printed name and title)

Date

Subscribed and sworn to before me on this date:

Notary Public:
My Commission Expires:

DRAFT

AIA Document G706A – 1994. Copyright © 1982 and 1994. All rights reserved. "The American Institute of Architects," "American Institute of Architects," "AIA," the AIA Logo, and "AIA Contract Documents" are trademarks of The American Institute of Architects. This draft was produced at 18:26:10 CDT on 05/13/2026 under Subscription No.20240042832 which expires on 07/01/2026, is not for resale, is licensed for one-time use only, and may only be used in accordance with the AIA Contract Documents® Terms of Service. To report copyright violations, e-mail docinfo@aiacontracts.com.
User Notes: (6a04c232231c9948d13811b0)

AIA® Document G707™ – 1994

Consent of Surety to Final Payment

PROJECT: *(Name and address)*
CIP Trimmier Park Lights Upgrade

3600 Alba Club Road
Mobile, AL 36605

ARCHITECT'S PROJECT NUMBER:
PR-068-24
CONTRACT FOR:

CONTRACT DATED:
0/0/00

OWNER: [ ]
ARCHITECT: [ ]
CONTRACTOR: [ ]
SURETY: [ ]
OTHER: [ ]

TO OWNER: *(Name and address)*
City of Mobile
City of Mobile Real Estate Asset
Management Department P. O. Box 1827
Mobile, AL 36633-1827

In accordance with the provisions of the Contract between the Owner and the Contractor as indicated above, the
(Insert name and address of Surety)

, SURETY,

on bond of
(Insert name and address of Contractor)

, CONTRACTOR,

hereby approves of the final payment to the Contractor, and agrees that final payment to the Contractor shall not relieve the Surety of any of its obligations to
(Insert name and address of Owner)

City of Mobile
City of Mobile Real Estate Asset Management Department P. O. Box 1827
Mobile, AL 36633-1827

, OWNER,

as set forth in said Surety's bond.

IN WITNESS WHEREOF, the Surety has hereunto set its hand on this date:
(Insert in writing the month followed by the numeric date and year.)

SURETY *(Signature)*

Attest:
(Seal):

(Printed name and title)

DRAFT

AIA Document G707 – 1994. Copyright © 1982 and 1994. All rights reserved. "The American Institute of Architects," "American Institute of Architects," "AIA," the AIA Logo, and "AIA Contract Documents" are trademarks of The American Institute of Architects. This draft was produced at 18:30:22 CDT on 05/13/2026 under Subscription No.20240042832 which expires on 07/01/2026, is not for resale, is licensed for one-time use only, and may only be used in accordance with the AIA Contract Documents® Terms of Service. To report copyright violations, e-mail docinfo@aiacontracts.com.
User Notes: (6a04c307231c9948d13811c7)

Company ID Number:

Approved by:

Employer	
Name (Please Type or Print)	
Signature	Date
Department of Homeland Secu[illegible] Division	
Name (Please Type or P[illegible]	Title
Signature	Date

SAMPLE

E-Verify

Company ID Number:

Information Required for the E-Verify Program **Information relating to your Company:**	
Company Name	
Company Facility Address	
Company Alternate Address	
County or Parish	
Employer Identification Num	
North American Industry Classification Systems Code	
Parent Company	
Number of Employees	
Number of Sites Verified for	

SAMPLE

Print Page Reset Form

CITY OF MOBILE, AL
VENDOR INFORMATION FORM

Company Information:

1. City Vendor Number:

2. Name of Company:

3. Company D.B.A. Name, if any:

4. Mailing Address:

5. Remittance Address:

6. Telephone:

7. Fax

8. Main Email:

Primary Contact:

9. Contact Name and Title:

10. Contact Phone:

11. Contact Fax:

12. Contact Email:

Alternate Contact (if applicable):

13. Alt. Contact Name and Title:

14. Alt. Contact Phone:

15. Alt. Contact Fax:

16. Alt. Contact Email:

City of Mobile Business License Information:

17. City of Mobile Business License No. (if required):

Please attach additional sheets if necessary.

ELECTRONIC PAYMENT AUTHORIZATION

I authorize the City of Mobile to pay amounts owed to my company by EFT (electronic funds transfer). In the event of any discrepancy, the City has the authority to reverse the payment and debit my account for the incorrect payment amount.

All fields are required to be completed.

Company Name _____

City Vendor No. *(if available)* _____ Tax Identification No. _____

Billing Address _____

City State Zip _____

EFT Contact Person _____

EFT Contact Phone _____

EFT Contact Email _____
(required for EFT payment notification emails)

Bank Name _____

Routing Number _____ Account Number _____

Account Type ☐ Checking or ☐ Savings

Authorized Official (print) _____

Authorized Official (signature) _____ Date 12/28/2018

For City Use Only: Vendor No._____ Entered Date _____

Form **W-9**
(Rev. December 2014)
Department of the Treasury
Internal Revenue Service

Request for Taxpayer Identification Number and Certification

Give Form to the requester. Do not send to the IRS.

Print or type
See Specific Instructions on page 2.

1 Name (as shown on your income tax return). Name is required on this line; do not leave this line blank.

2 Business name/disregarded entity name, if different from above

3 Check appropriate box for federal tax classification; check only **one** of the following seven boxes:

☐ Individual/sole proprietor or single-member LLC ☐ C Corporation ☐ S Corporation ☐ Partnership ☐ Trust/estate

☐ Limited liability company. Enter the tax classification (C=C corporation, S=S corporation, P=partnership) ▶ _____

Note. For a single-member LLC that is disregarded, do not check LLC; check the appropriate box in the line above for the tax classification of the single-member owner.

☐ Other (see instructions) ▶

4 Exemptions (codes apply only to certain entities, not individuals; see instructions on page 3):

Exempt payee code (if any) _____

Exemption from FATCA reporting code (if any) _____

(Applies to accounts maintained outside the U.S.)

5 Address (number, street, and apt. or suite no.)

Requester's name and address (optional)

6 City, state, and ZIP code

7 List account number(s) here (optional)

Part I Taxpayer Identification Number (TIN)

Enter your TIN in the appropriate box. The TIN provided must match the name given on line 1 to avoid backup withholding. For individuals, this is generally your social security number (SSN). However, for a resident alien, sole proprietor, or disregarded entity, see the Part I instructions on page 3. For other entities, it is your employer identification number (EIN). If you do not have a number, see *How to get a TIN* on page 3.

Note. If the account is in more than one name, see the instructions for line 1 and the chart on page 4 for guidelines on whose number to enter.

Social security number

			–			–				

or

Employer identification number

		–						

Part II Certification

Under penalties of perjury, I certify that:

1. The number shown on this form is my correct taxpayer identification number (or I am waiting for a number to be issued to me); and
2. I am not subject to backup withholding because: (a) I am exempt from backup withholding, or (b) I have not been notified by the Internal Revenue Service (IRS) that I am subject to backup withholding as a result of a failure to report all interest or dividends, or (c) the IRS has notified me that I am no longer subject to backup withholding; and
3. I am a U.S. citizen or other U.S. person (defined below); and
4. The FATCA code(s) entered on this form (if any) indicating that I am exempt from FATCA reporting is correct.

Certification instructions. You must cross out item 2 above if you have been notified by the IRS that you are currently subject to backup withholding because you have failed to report all interest and dividends on your tax return. For real estate transactions, item 2 does not apply. For mortgage interest paid, acquisition or abandonment of secured property, cancellation of debt, contributions to an individual retirement arrangement (IRA), and generally, payments other than interest and dividends, you are not required to sign the certification, but you must provide your correct TIN. See the instructions on page 3.

Sign Here | **Signature of U.S. person** ▶ | **Date** ▶ 12/28/2018

General Instructions

Section references are to the Internal Revenue Code unless otherwise noted.

Future developments. Information about developments affecting Form W-9 (such as legislation enacted after we release it) is at *www.irs.gov/fw9*.

Purpose of Form

An individual or entity (Form W-9 requester) who is required to file an information return with the IRS must obtain your correct taxpayer identification number (TIN) which may be your social security number (SSN), individual taxpayer identification number (ITIN), adoption taxpayer identification number (ATIN), or employer identification number (EIN), to report on an information return the amount paid to you, or other amount reportable on an information return. Examples of information returns include, but are not limited to, the following:

- Form 1099-INT (interest earned or paid)
- Form 1099-DIV (dividends, including those from stocks or mutual funds)
- Form 1099-MISC (various types of income, prizes, awards, or gross proceeds)
- Form 1099-B (stock or mutual fund sales and certain other transactions by brokers)
- Form 1099-S (proceeds from real estate transactions)
- Form 1099-K (merchant card and third party network transactions)
- Form 1098 (home mortgage interest), 1098-E (student loan interest), 1098-T (tuition)
- Form 1099-C (canceled debt)
- Form 1099-A (acquisition or abandonment of secured property)

Use Form W-9 only if you are a U.S. person (including a resident alien), to provide your correct TIN.

If you do not return Form W-9 to the requester with a TIN, you might be subject to backup withholding. See *What is backup withholding?* on page 2.

By signing the filled-out form, you:

1. Certify that the TIN you are giving is correct (or you are waiting for a number to be issued),
2. Certify that you are not subject to backup withholding, or
3. Claim exemption from backup withholding if you are a U.S. exempt payee. If applicable, you are also certifying that as a U.S. person, your allocable share of any partnership income from a U.S. trade or business is not subject to the withholding tax on foreign partners' share of effectively connected income, and
4. Certify that FATCA code(s) entered on this form (if any) indicating that you are exempt from the FATCA reporting, is correct. See *What is FATCA reporting?* on page 2 for further information.

SECTION 00700

GENERAL CONDITIONS OF THE CONTRACT FOR CONSTRUCTION,
AIA DOCUMENT A201 - 2007

PART 1 GENERAL

This section includes the GENERAL CONDITIONS OF THE CONTRACT FOR CONSTRUCTION, AIA Document A-201, that is to be used for this Project. The document has been electronically modified to meet the City of Mobile's requirements and shall be used for the project.

AIA® Document A201® – 2017

General Conditions of the Contract for Construction

for the following PROJECT:
(Name and location or address)

CIP Trimmier Park Lights Upgrade
3600 Alba Club Road
Mobile, AL 36605
PR- 068-24

THE OWNER:
(Name, legal status and address)

City of Mobile
P. O. Box 1827
Mobile, AL 36633-1827

THE DESIGN CONSULTANT:
(Name, legal status and address)

Jaguar Consulting, LLC
8658 Capital Drive North
Mobile, AL 36695

ADDITIONS AND DELETIONS:
The author of this document may have revised the text of the original AIA standard form. An *Additions and Deletions Report* that notes revisions to the standard form text is available from the author and should be reviewed. A vertical line in the left margin of this document indicates where the author has added to or deleted from the original AIA text.

This document has important legal consequences. Consultation with an attorney is encouraged with respect to its completion or modification.

For guidance in modifying this document to include supplementary conditions, see AIA Document A503™–2017, Guide for Supplementary Conditions.

TABLE OF ARTICLES

1 GENERAL PROVISIONS

2 OWNER

3 CONTRACTOR

4 ARCHITECT

5 SUBCONTRACTORS

6 CONSTRUCTION BY OWNER OR BY SEPARATE CONTRACTORS

7 CHANGES IN THE WORK

8 TIME

9 PAYMENTS AND COMPLETION

10 PROTECTION OF PERSONS AND PROPERTY

11 INSURANCE AND BONDS

12 UNCOVERING AND CORRECTION OF WORK

AIA Document A201 – 2017. Copyright © 1911, 1915, 1918, 1925, 1937, 1951, 1958, 1961, 1963, 1966, 1970, 1976, 1987, 1997, 2007 and 2017. All rights reserved. "The American Institute of Architects," "American Institute of Architects," "AIA," the AIA Logo, and "AIA Contract Documents" are trademarks of The American Institute of Architects. This document was produced at 15:45:22 CDT on 05/11/2026 under Subscription No.20240042832 which expires on 07/01/2026, is not for resale, is licensed for one-time use only, and may only be used in accordance with the AIA Contract Documents® Terms of Service. To report copyright violations, e-mail docinfo@aiacontracts.com.
User Notes:
(69f1008b5f1b2d23ced2487a)

13 MISCELLANEOUS PROVISIONS

14 TERMINATION OR SUSPENSION OF THE CONTRACT

15 CLAIMS AND DISPUTES

AIA Document A201 – 2017. Copyright © 1911, 1915, 1918, 1925, 1937, 1951, 1958, 1961, 1963, 1966, 1970, 1976, 1987, 1997, 2007 and 2017. All rights reserved. "The American Institute of Architects," "American Institute of Architects," "AIA," the AIA Logo, and "AIA Contract Documents" are trademarks of The American Institute of Architects. This document was produced at 15:45:22 CDT on 05/11/2026 under Subscription No.20240042832 which expires on 07/01/2026, is not for resale, is licensed for one-time use only, and may only be used in accordance with the AIA Contract Documents® Terms of Service. To report copyright violations, e-mail docinfo@aiacontracts.com.
User Notes:
(69f1008b5f1b2d23ced2487a)

INDEX
(Topics and numbers in bold are Section headings.)

Acceptance of Nonconforming Work
9.6.6, 9.9.3, **12.3**
Acceptance of Work
9.6.6, 9.8.2, 9.9.3, 9.10.1, 9.10.3, 12.3
Access to Work
3.16, 6.2.1, 12.1
Accident Prevention
10
Acts and Omissions
3.2, 3.3.2, 3.12.8, 3.18, 4.2.3, 8.3.1, 9.5.1, 10.2.5, 10.2.8, 13.3.2, 14.1, 15.1.2, 15.2
Addenda
1.1.1
Additional Costs, Claims for
3.7.4, 3.7.5, 10.3.2, 15.1.5
Additional Inspections and Testing
9.4.2, 9.8.3, 12.2.1, **13.4**
Additional Time, Claims for
3.2.4, 3.7.4, 3.7.5, 3.10.2, 8.3.2, **15.1.6**
Administration of the Contract
3.1.3, **4.2**, 9.4, 9.5
Advertisement or Invitation to Bid
1.1.1
Aesthetic Effect
4.2.13
Allowances
3.8
Applications for Payment
4.2.5, 7.3.9, 9.2, **9.3**, 9.4, 9.5.1, 9.5.4, 9.6.3, 9.7, 9.10
Approvals
2.1.1, 2.3.1, 2.5, 3.1.3, 3.10.2, 3.12.8, 3.12.9, 3.12.10.1, 4.2.7, 9.3.2, 13.4.1
Arbitration
8.3.1, 15.3.2, **15.4**
ARCHITECT
4
Architect, Definition of
4.1.1
Architect, Extent of Authority
2.5, 3.12.7, 4.1.2, 4.2, 5.2, 6.3, 7.1.2, 7.3.4, 7.4, 9.2, 9.3.1, 9.4, 9.5, 9.6.3, 9.8, 9.10.1, 9.10.3, 12.1, 12.2.1, 13.4.1, 13.4.2, 14.2.2, 14.2.4, 15.1.4, 15.2.1
Architect, Limitations of Authority and Responsibility
2.1.1, 3.12.4, 3.12.8, 3.12.10, 4.1.2, 4.2.1, 4.2.2, 4.2.3, 4.2.6, 4.2.7, 4.2.10, 4.2.12, 4.2.13, 5.2.1, 7.4, 9.4.2, 9.5.4, 9.6.4, 15.1.4, 15.2
Architect's Additional Services and Expenses
2.5, 12.2.1, 13.4.2, 13.4.3, 14.2.4
Architect's Administration of the Contract
3.1.3, 3.7.4, 15.2, 9.4.1, 9.5
Architect's Approvals
2.5, 3.1.3, 3.5, 3.10.2, 4.2.7
Architect's Authority to Reject Work
3.5, 4.2.6, 12.1.2, 12.2.1
Architect's Copyright
1.1.7, 1.5
Architect's Decisions
3.7.4, 4.2.6, 4.2.7, 4.2.11, 4.2.12, 4.2.13, 4.2.14, 6.3, 7.3.4, 7.3.9, 8.1.3, 8.3.1, 9.2, 9.4.1, 9.5, 9.8.4, 9.9.1, 13.4.2, 15.2
Architect's Inspections
3.7.4, 4.2.2, 4.2.9, 9.4.2, 9.8.3, 9.9.2, 9.10.1, 13.4
Architect's Instructions
3.2.4, 3.3.1, 4.2.6, 4.2.7, 13.4.2
Architect's Interpretations
4.2.11, 4.2.12
Architect's Project Representative
4.2.10
Architect's Relationship with Contractor
1.1.2, 1.5, 2.3.3, 3.1.3, 3.2.2, 3.2.3, 3.2.4, 3.3.1, 3.4.2, 3.5, 3.7.4, 3.7.5, 3.9.2, 3.9.3, 3.10, 3.11, 3.12, 3.16, 3.18, 4.1.2, 4.2, 5.2, 6.2.2, 7, 8.3.1, 9.2, 9.3, 9.4, 9.5, 9.7, 9.8, 9.9, 10.2.6, 10.3, 11.3, 12, 13.3.2, 13.4, 15.2
Architect's Relationship with Subcontractors
1.1.2, 4.2.3, 4.2.4, 4.2.6, 9.6.3, 9.6.4, 11.3
Architect's Representations
9.4.2, 9.5.1, 9.10.1
Architect's Site Visits
3.7.4, 4.2.2, 4.2.9, 9.4.2, 9.5.1, 9.9.2, 9.10.1, 13.4
Asbestos
10.3.1
Attorneys' Fees
3.18.1, 9.6.8, 9.10.2, 10.3.3
Award of Separate Contracts
6.1.1, 6.1.2
Award of Subcontracts and Other Contracts for Portions of the Work
5.2
Basic Definitions
1.1
Bidding Requirements
1.1.1
Binding Dispute Resolution
8.3.1, 9.7, 11.5, 13.1, 15.1.2, 15.1.3, 15.2.1, 15.2.5, 15.2.6.1, 15.3.1, 15.3.2, 15.3.3, 15.4.1
Bonds, Lien
7.3.4.4, 9.6.8, 9.10.2, 9.10.3
Bonds, Performance, and Payment
7.3.4.4, 9.6.7, 9.10.3, **11.1.2**, 11.1.3, **11.5**
Building Information Models Use and Reliance
1.8
Building Permit
3.7.1
Capitalization
1.3
Certificate of Substantial Completion
9.8.3, 9.8.4, 9.8.5
Certificates for Payment
4.2.1, 4.2.5, 4.2.9, 9.3.3, **9.4**, 9.5, 9.6.1, 9.6.6, 9.7, 9.10.1, 9.10.3, 14.1.1.3, 14.2.4, 15.1.4
Certificates of Inspection, Testing or Approval
13.4.4
Certificates of Insurance
9.10.2
Change Orders

AIA Document A201 – 2017. Copyright © 1911, 1915, 1918, 1925, 1937, 1951, 1958, 1961, 1963, 1966, 1970, 1976, 1987, 1997, 2007 and 2017. All rights reserved. "The American Institute of Architects," "American Institute of Architects," "AIA," the AIA Logo, and "AIA Contract Documents" are trademarks of The American Institute of Architects. This document was produced at 15:45:22 CDT on 05/11/2026 under Subscription No.20240042832 which expires on 07/01/2026, is not for resale, is licensed for one-time use only, and may only be used in accordance with the AIA Contract Documents® Terms of Service. To report copyright violations, e-mail docinfo@aiacontracts.com.
User Notes:
(69f1008b5f1b2d23ced2487a)

1.1.1, 3.4.2, 3.7.4, 3.8.2.3, 3.11, 3.12.8, 4.2.8, 5.2.3, 7.1.2, 7.1.3, **7.2**, 7.3.2, 7.3.7, 7.3.9, 7.3.10, 8.3.1, 9.3.1.1, 9.10.3, 10.3.2, 11.2, 11.5, 12.1.2
Change Orders, Definition of
7.2.1
CHANGES IN THE WORK
2.2.2, 3.11, 4.2.8, **7**, 7.2.1, 7.3.1, 7.4, 8.3.1, 9.3.1.1, 11.5
Claims, Definition of
15.1.1
Claims, Notice of
1.6.2, 15.1.3
CLAIMS AND DISPUTES
3.2.4, 6.1.1, 6.3, 7.3.9, 9.3.3, 9.10.4, 10.3.3, **15**, 15.4
Claims and Timely Assertion of Claims
15.4.1
Claims for Additional Cost
3.2.4, 3.3.1, 3.7.4, 7.3.9, 9.5.2, 10.2.5, 10.3.2, **15.1.5**
Claims for Additional Time
3.2.4, 3.3.1, 3.7.4, 6.1.1, 8.3.2, 9.5.2, 10.3.2, **15.1.6**
Concealed or Unknown Conditions, Claims for
3.7.4
Claims for Damages
3.2.4, 3.18, 8.3.3, 9.5.1, 9.6.7, 10.2.5, 10.3.3, 11.3, 11.3.2, 14.2.4, 15.1.7
Claims Subject to Arbitration
15.4.1
Cleaning Up
3.15, 6.3
Commencement of the Work, Conditions Relating to
2.2.1, 3.2.2, 3.4.1, 3.7.1, 3.10.1, 3.12.6, 5.2.1, 5.2.3, 6.2.2, 8.1.2, 8.2.2, 8.3.1, 11.1, 11.2, **15.1.5**
Commencement of the Work, Definition of
8.1.2
Communications
3.9.1, **4.2.4**
Completion, Conditions Relating to
3.4.1, 3.11, 3.15, 4.2.2, 4.2.9, 8.2, 9.4.2, 9.8, 9.9.1, 9.10, 12.2, 14.1.2, 15.1.2
COMPLETION, PAYMENTS AND
9
Completion, Substantial
3.10.1, 4.2.9, 8.1.1, 8.1.3, 8.2.3, 9.4.2, 9.8, 9.9.1, 9.10.3, 12.2, 15.1.2
Compliance with Laws
2.3.2, 3.2.3, 3.6, 3.7, 3.12.10, 3.13, 9.6.4, 10.2.2, 13.1, 13.3, 13.4.1, 13.4.2, 13.5, 14.1.1, 14.2.1.3, 15.2.8, 15.4.2, 15.4.3
Concealed or Unknown Conditions
3.7.4, 4.2.8, 8.3.1, 10.3
Conditions of the Contract
1.1.1, 6.1.1, 6.1.4
Consent, Written
3.4.2, 3.14.2, 4.1.2, 9.8.5, 9.9.1, 9.10.2, 9.10.3, 13.2, 15.4.4.2
Consolidation or Joinder
15.4.4
CONSTRUCTION BY OWNER OR BY SEPARATE CONTRACTORS
1.1.4, **6**
Construction Change Directive, Definition of
7.3.1
Construction Change Directives
1.1.1, 3.4.2, 3.11, 3.12.8, 4.2.8, 7.1.1, 7.1.2, 7.1.3, **7.3**, 9.3.1.1
Construction Schedules, Contractor's
3.10, 3.11, 3.12.1, 3.12.2, 6.1.3, 15.1.6.2
Contingent Assignment of Subcontracts
5.4, 14.2.2.2
Continuing Contract Performance
15.1.4
Contract, Definition of
1.1.2
CONTRACT, TERMINATION OR SUSPENSION OF THE
5.4.1.1, 5.4.2, 11.5, **14**
Contract Administration
3.1.3, 4, 9.4, 9.5
Contract Award and Execution, Conditions Relating to
3.7.1, 3.10, 5.2, 6.1
Contract Documents, Copies Furnished and Use of
1.5.2, 2.3.6, 5.3
Contract Documents, Definition of
1.1.1
Contract Sum
2.2.2, 2.2.4, 3.7.4, 3.7.5, 3.8, 3.10.2, 5.2.3, 7.3, 7.4, **9.1**, 9.2, 9.4.2, 9.5.1.4, 9.6.7, 9.7, 10.3.2, 11.5, 12.1.2, 12.3, 14.2.4, 14.3.2, 15.1.4.2, **15.1.5, 15.2.5**
Contract Sum, Definition of
9.1
Contract Time
1.1.4, 2.2.1, 2.2.2, 3.7.4, 3.7.5, 3.10.2, 5.2.3, 6.1.5, 7.2.1.3, 7.3.1, 7.3.5, 7.3.6, 7, 7, 7.3.10, 7.4, 8.1.1, 8.2.1, 8.2.3, 8.3.1, 9.5.1, 9.7, 10.3.2, 12.1.1, 12.1.2, 14.3.2, 15.1.4.2, 15.1.6.1, 15.2.5
Contract Time, Definition of
8.1.1
CONTRACTOR
3
Contractor, Definition of
3.1, 6.1.2
Contractor's Construction and Submittal Schedules
3.10, 3.12.1, 3.12.2, 4.2.3, 6.1.3, 15.1.6.2
Contractor's Employees
2.2.4, 3.3.2, 3.4.3, 3.8.1, 3.9, 3.18.2, 4.2.3, 4.2.6, 10.2, 10.3, 11.3, 14.1, 14.2.1.1
Contractor's Liability Insurance
11.1
Contractor's Relationship with Separate Contractors and Owner's Forces
3.12.5, 3.14.2, 4.2.4, 6, 11.3, 12.2.4
Contractor's Relationship with Subcontractors
1.2.2, 2.2.4, 3.3.2, 3.18.1, 3.18.2, 4.2.4, 5, 9.6.2, 9.6.7, 9.10.2, 11.2, 11.3, 11.4
Contractor's Relationship with the Architect
1.1.2, 1.5, 2.3.3, 3.1.3, 3.2.2, 3.2.3, 3.2.4, 3.3.1, 3.4.2, 3.5.1, 3.7.4, 3.10, 3.11, 3.12, 3.16, 3.18, 4.2, 5.2, 6.2.2, 7, 8.3.1, 9.2, 9.3, 9.4, 9.5, 9.7, 9.8, 9.9, 10.2.6,

AIA Document A201 – 2017. Copyright © 1911, 1915, 1918, 1925, 1937, 1951, 1958, 1961, 1963, 1966, 1970, 1976, 1987, 1997, 2007 and 2017. All rights reserved. "The American Institute of Architects," "American Institute of Architects," "AIA," the AIA Logo, and "AIA Contract Documents" are trademarks of The American Institute of Architects. This document was produced at 15:45:22 CDT on 05/11/2026 under Subscription No.20240042832 which expires on 07/01/2026, is not for resale, is licensed for one-time use only, and may only be used in accordance with the AIA Contract Documents® Terms of Service. To report copyright violations, e-mail docinfo@aiacontracts.com.
User Notes:
(69f1008b5f1b2d23ced2487a)

10.3, 11.3, 12, 13.4, 15.1.3, 15.2.1
Contractor's Representations
3.2.1, 3.2.2, 3.5, 3.12.6, 6.2.2, 8.2.1, 9.3.3, 9.8.2
Contractor's Responsibility for Those Performing the Work
3.3.2, 3.18, 5.3, 6.1.3, 6.2, 9.5.1, 10.2.8
Contractor's Review of Contract Documents
3.2
Contractor's Right to Stop the Work
2.2.2, 9.7
Contractor's Right to Terminate the Contract
14.1
Contractor's Submittals
3.10, 3.11, 3.12, 4.2.7, 5.2.1, 5.2.3, 9.2, 9.3, 9.8.2, 9.8.3, 9.9.1, 9.10.2, 9.10.3
Contractor's Superintendent
3.9, 10.2.6
Contractor's Supervision and Construction Procedures
1.2.2, 3.3, 3.4, 3.12.10, 4.2.2, 4.2.7, 6.1.3, 6.2.4, 7.1.3, 7.3.4, 7.3.6, 8.2, 10, 12, 14, 15.1.4
Coordination and Correlation
1.2, 3.2.1, 3.3.1, 3.10, 3.12.6, 6.1.3, 6.2.1
Copies Furnished of Drawings and Specifications
1.5, 2.3.6, 3.11
Copyrights
1.5, **3.17**
Correction of Work
2.5, 3.7.3, 9.4.2, 9.8.2, 9.8.3, 9.9.1, 12.1.2, **12.2**, 12.3, 15.1.3.1, 15.1.3.2, 15.2.1
Correlation and Intent of the Contract Documents
1.2
Cost, Definition of
7.3.4
Costs
2.5, 3.2.4, 3.7.3, 3.8.2, 3.15.2, 5.4.2, 6.1.1, 6.2.3, 7.3.3.3, 7.3.4, 7.3.8, 7.3.9, 9.10.2, 10.3.2, 10.3.6, 11.2, 12.1.2, 12.2.1, 12.2.4, 13.4, 14
Cutting and Patching
3.14, 6.2.5
Damage to Construction of Owner or Separate Contractors
3.14.2, 6.2.4, 10.2.1.2, 10.2.5, 10.4, 12.2.4
Damage to the Work
3.14.2, 9.9.1, 10.2.1.2, 10.2.5, 10.4, 12.2.4
Damages, Claims for
3.2.4, 3.18, 6.1.1, 8.3.3, 9.5.1, 9.6.7, 10.3.3, 11.3.2, 11.3, 14.2.4, 15.1.7
Damages for Delay
6.2.3, 8.3.3, 9.5.1.6, 9.7, 10.3.2, 14.3.2
Date of Commencement of the Work, Definition of
8.1.2
Date of Substantial Completion, Definition of
8.1.3
Day, Definition of
8.1.4
Decisions of the Architect
3.7.4, 4.2.6, 4.2.7, 4.2.11, 4.2.12, 4.2.13, 6.3, 7.3.4, 7.3.9, 8.1.3, 8.3.1, 9.2, 9.4, 9.5.1, 9.8.4, 9.9.1, 13.4.2, 14.2.2, 14.2.4, 15.1, 15.2
Decisions to Withhold Certification
9.4.1, **9.5**, 9.7, 14.1.1.3
Defective or Nonconforming Work, Acceptance, Rejection and Correction of
2.5, 3.5, 4.2.6, 6.2.3, 9.5.1, 9.5.3, 9.6.6, 9.8.2, 9.9.3, 9.10.4, 12.2.1
Definitions
1.1, 2.1.1, 3.1.1, 3.5, 3.12.1, 3.12.2, 3.12.3, 4.1.1, 5.1, 6.1.2, 7.2.1, 7.3.1, 8.1, 9.1, 9.8.1, 15.1.1
Delays and Extensions of Time
3.2, **3.7.4**, 5.2.3, 7.2.1, 7.3.1, **7.4**, **8.3**, 9.5.1, **9.7**, 10.3.2, **10.4**, 14.3.2, **15.1.6**, 15.2.5
Digital Data Use and Transmission
1.7
Disputes
6.3, 7.3.9, 15.1, 15.2
Documents and Samples at the Site
3.11
Drawings, Definition of
1.1.5
Drawings and Specifications, Use and Ownership of
3.11
Effective Date of Insurance
8.2.2
Emergencies
10.4, 14.1.1.2, **15.1.5**
Employees, Contractor's
3.3.2, 3.4.3, 3.8.1, 3.9, 3.18.2, 4.2.3, 4.2.6, 10.2, 10.3.3, 11.3, 14.1, 14.2.1.1
Equipment, Labor, or Materials
1.1.3, 1.1.6, 3.4, 3.5, 3.8.2, 3.8.3, 3.12, 3.13, 3.15.1, 4.2.6, 4.2.7, 5.2.1, 6.2.1, 7.3.4, 9.3.2, 9.3.3, 9.5.1.3, 9.10.2, 10.2.1, 10.2.4, 14.2.1.1, 14.2.1.2
Execution and Progress of the Work
1.1.3, 1.2.1, 1.2.2, 2.3.4, 2.3.6, 3.1, 3.3.1, 3.4.1, 3.7.1, 3.10.1, 3.12, 3.14, 4.2, 6.2.2, 7.1.3, 7.3.6, 8.2, 9.5.1, 9.9.1, 10.2, 10.3, 12.1, 12.2, 14.2, 14.3.1, 15.1.4
Extensions of Time
3.2.4, 3.7.4, 5.2.3, 7.2.1, 7.3, 7.4, 9.5.1, 9.7, 10.3.2, 10.4, 14.3, 15.1.6, **15.2.5**
Failure of Payment
9.5.1.3, **9.7**, 9.10.2, 13.5, 14.1.1.3, 14.2.1.2
Faulty Work
(See Defective or Nonconforming Work)
Final Completion and Final Payment
4.2.1, 4.2.9, 9.8.2, **9.10**, 12.3, 14.2.4, 14.4.3
Financial Arrangements, Owner's
2.2.1, 13.2.2, 14.1.1.4
GENERAL PROVISIONS
1
Governing Law
13.1
Guarantees (See Warranty)
Hazardous Materials and Substances
10.2.4, **10.3**
Identification of Subcontractors and Suppliers
5.2.1
Indemnification
3.17, **3.18**, 9.6.8, 9.10.2, 10.3.3, 11.3
Information and Services Required of the Owner

AIA Document A201 – 2017. Copyright © 1911, 1915, 1918, 1925, 1937, 1951, 1958, 1961, 1963, 1966, 1970, 1976, 1987, 1997, 2007 and 2017. All rights reserved. "The American Institute of Architects," "American Institute of Architects," "AIA," the AIA Logo, and "AIA Contract Documents" are trademarks of The American Institute of Architects. This document was produced at 15:45:22 CDT on 05/11/2026 under Subscription No.20240042832 which expires on 07/01/2026, is not for resale, is licensed for one-time use only, and may only be used in accordance with the AIA Contract Documents® Terms of Service. To report copyright violations, e-mail docinfo@aiacontracts.com.
User Notes:
(69f1008b5f1b2d23ced2487a)

2.1.2, **2.2**, 2.3, 3.2.2, 3.12.10.1, 6.1.3, 6.1.4, 6.2.5, 9.6.1, 9.9.2, 9.10.3, 10.3.3, 11.2, 13.4.1, 13.4.2, 14.1.1.4, 14.1.4, 15.1.4
Initial Decision
15.2
Initial Decision Maker, Definition of
1.1.8
Initial Decision Maker, Decisions
14.2.4, 15.1.4.2, 15.2.1, 15.2.2, 15.2.3, 15.2.4, 15.2.5
Initial Decision Maker, Extent of Authority
14.2.4, 15.1.4.2, 15.2.1, 15.2.2, 15.2.3, 15.2.4, 15.2.5
Injury or Damage to Person or Property
10.2.8, 10.4
Inspections
3.1.3, 3.3.3, 3.7.1, 4.2.2, 4.2.6, 4.2.9, 9.4.2, 9.8.3, 9.9.2, 9.10.1, 12.2.1, 13.4
Instructions to Bidders
1.1.1
Instructions to the Contractor
3.2.4, 3.3.1, 3.8.1, 5.2.1, 7, 8.2.2, 12, 13.4.2
Instruments of Service, Definition of
1.1.7
Insurance
6.1.1, 7.3.4, 8.2.2, 9.3.2, 9.8.4, 9.9.1, 9.10.2, 10.2.5, **11**
Insurance, Notice of Cancellation or Expiration
11.1.4, 11.2.3
Insurance, Contractor's Liability
11.1
Insurance, Effective Date of
8.2.2, 14.4.2
Insurance, Owner's Liability
11.2
Insurance, Property
10.2.5, 11.2, 11.4, 11.5
Insurance, Stored Materials
9.3.2
INSURANCE AND BONDS
11
Insurance Companies, Consent to Partial Occupancy
9.9.1
Insured loss, Adjustment and Settlement of
11.5
Intent of the Contract Documents
1.2.1, 4.2.7, 4.2.12, 4.2.13
Interest
13.5
Interpretation
1.1.8, 1.2.3, **1.4**, 4.1.1, 5.1, 6.1.2, 15.1.1
Interpretations, Written
4.2.11, 4.2.12
Judgment on Final Award
15.4.2
Labor and Materials, Equipment
1.1.3, 1.1.6, **3.4**, 3.5, 3.8.2, 3.8.3, 3.12, 3.13, 3.15.1, 5.2.1, 6.2.1, 7.3.4, 9.3.2, 9.3.3, 9.5.1.3, 9.10.2, 10.2.1, 10.2.4, 14.2.1.1, 14.2.1.2
Labor Disputes
8.3.1
Laws and Regulations
1.5, 2.3.2, 3.2.3, 3.2.4, 3.6, 3.7, 3.12.10, 3.13, 9.6.4, 9.9.1, 10.2.2, 13.1, 13.3.1, 13.4.2, 13.5, 14, 15.2.8, 15.4
Liens
2.1.2, 9.3.1, 9.3.3, 9.6.8, 9.10.2, 9.10.4, 15.2.8
Limitations, Statutes of
12.2.5, 15.1.2, 15.4.1.1
Limitations of Liability
3.2.2, 3.5, 3.12.10, 3.12.10.1, 3.17, 3.18.1, 4.2.6, 4.2.7, 6.2.2, 9.4.2, 9.6.4, 9.6.7, 9.6.8, 10.2.5, 10.3.3, 11.3, 12.2.5, 13.3.1
Limitations of Time
2.1.2, 2.2, 2.5, 3.2.2, 3.10, 3.11, 3.12.5, 3.15.1, 4.2.7, 5.2, 5.3, 5.4.1, 6.2.4, 7.3, 7.4, 8.2, 9.2, 9.3.1, 9.3.3, 9.4.1, 9.5, 9.6, 9.7, 9.8, 9.9, 9.10, 12.2, 13.4, 14, 15, 15.1.2, 15.1.3, 15.1.5
Materials, Hazardous
10.2.4, **10.3**
Materials, Labor, Equipment and
1.1.3, 1.1.6, 3.4.1, 3.5, 3.8.2, 3.8.3, 3.12, 3.13, 3.15.1, 5.2.1, 6.2.1, 7.3.4, 9.3.2, 9.3.3, 9.5.1.3, 9.10.2, 10.2.1.2, 10.2.4, 14.2.1.1, 14.2.1.2
Means, Methods, Techniques, Sequences and Procedures of Construction
3.3.1, 3.12.10, 4.2.2, 4.2.7, 9.4.2
Mechanic's Lien
2.1.2, 9.3.1, 9.3.3, 9.6.8, 9.10.2, 9.10.4, 15.2.8
Mediation
8.3.1, 15.1.3.2, 15.2.1, 15.2.5, 15.2.6, **15.3**, 15.4.1, 15.4.1.1
Minor Changes in the Work
1.1.1, 3.4.2, 3.12.8, 4.2.8, 7.1, **7.4**
MISCELLANEOUS PROVISIONS
13
Modifications, Definition of
1.1.1
Modifications to the Contract
1.1.1, 1.1.2, 2.5, 3.11, 4.1.2, 4.2.1, 5.2.3, 7, 8.3.1, 9.7, 10.3.2
Mutual Responsibility
6.2
Nonconforming Work, Acceptance of
9.6.6, 9.9.3, **12.3**
Nonconforming Work, Rejection and Correction of
2.4, 2.5, 3.5, 4.2.6, 6.2.4, 9.5.1, 9.8.2, 9.9.3, 9.10.4, 12.2
Notice
1.6, 1.6.1, 1.6.2, 2.1.2, 2.2.2., 2.2.3, 2.2.4, 2.5, 3.2.4, 3.3.1, 3.7.4, 3.7.5, 3.9.2, 3.12.9, 3.12.10, 5.2.1, 7.4, 8.2.2 9.6.8, 9.7, 9.10.1, 10.2.8, 10.3.2, 11.5, 12.2.2.1, 13.4.1, 13.4.2, 14.1, 14.2.2, 14.4.2, 15.1.3, 15.1.5, 15.1.6, 15.4.1
Notice of Cancellation or Expiration of Insurance
11.1.4, 11.2.3
Notice of Claims
1.6.2, 2.1.2, 3.7.4, 9.6.8, 10.2.8, **15.1.3**, 15.1.5, 15.1.6, 15.2.8, 15.3.2, 15.4.1
Notice of Testing and Inspections
13.4.1, 13.4.2
Observations, Contractor's

AIA Document A201 – 2017. Copyright © 1911, 1915, 1918, 1925, 1937, 1951, 1958, 1961, 1963, 1966, 1970, 1976, 1987, 1997, 2007 and 2017. All rights reserved. "The American Institute of Architects," "American Institute of Architects," "AIA," the AIA Logo, and "AIA Contract Documents" are trademarks of The American Institute of Architects. This document was produced at 15:45:22 CDT on 05/11/2026 under Subscription No.20240042832 which expires on 07/01/2026, is not for resale, is licensed for one-time use only, and may only be used in accordance with the AIA Contract Documents® Terms of Service. To report copyright violations, e-mail docinfo@aiacontracts.com.
User Notes:
(69f1008b5f1b2d23ced2487a)

3.2, 3.7.4
Occupancy
2.3.1, 9.6.6, 9.8
Orders, Written
1.1.1, 2.4, 3.9.2, 7, 8.2.2, 11.5, 12.1, 12.2.2.1, 13.4.2, 14.3.1
OWNER
2
Owner, Definition of
2.1.1
Owner, Evidence of Financial Arrangements
2.2, 13.2.2, 14.1.1.4
Owner, Information and Services Required of the
2.1.2, **2.2**, 2.3, 3.2.2, 3.12.10, 6.1.3, 6.1.4, 6.2.5, 9.3.2, 9.6.1, 9.6.4, 9.9.2, 9.10.3, 10.3.3, 11.2, 13.4.1, 13.4.2, 14.1.1.4, 14.1.4, 15.1.4
Owner's Authority
1.5, 2.1.1, 2.3.32.4, 2.5, 3.4.2, 3.8.1, 3.12.10, 3.14.2, 4.1.2, 4.2.4, 4.2.9, 5.2.1, 5.2.4, 5.4.1, 6.1, 6.3, 7.2.1, 7.3.1, 8.2.2, 8.3.1, 9.3.2, 9.5.1, 9.6.4, 9.9.1, 9.10.2, 10.3.2, 11.4, 11.5, 12.2.2, 12.3, 13.2.2, 14.3, 14.4, 15.2.7
Owner's Insurance
11.2
Owner's Relationship with Subcontractors
1.1.2, 5.2, 5.3, 5.4, 9.6.4, 9.10.2, 14.2.2
Owner's Right to Carry Out the Work
2.5, 14.2.2
Owner's Right to Clean Up
6.3
Owner's Right to Perform Construction and to Award Separate Contracts
6.1
Owner's Right to Stop the Work
2.4
Owner's Right to Suspend the Work
14.3
Owner's Right to Terminate the Contract
14.2, 14.4
Ownership and Use of Drawings, Specifications and Other Instruments of Service
1.1.1, 1.1.6, 1.1.7, **1.5**, 2.3.6, 3.2.2, 3.11, 3.17, 4.2.12, 5.3
Partial Occupancy or Use
9.6.6, **9.9**
Patching, Cutting and
3.14, 6.2.5
Patents
3.17
Payment, Applications for
4.2.5, 7.3.9, 9.2, **9.3**, 9.4, 9.5, 9.6.3, 9.7, 9.8.5, 9.10.1, 14.2.3, 14.2.4, 14.4.3
Payment, Certificates for
4.2.5, 4.2.9, 9.3.3, **9.4**, 9.5, 9.6.1, 9.6.6, 9.7, 9.10.1, 9.10.3, 14.1.1.3, 14.2.4
Payment, Failure of
9.5.1.3, **9.7**, 9.10.2, 13.5, 14.1.1.3, 14.2.1.2
Payment, Final
4.2.1, 4.2.9, **9.10**, 12.3, 14.2.4, 14.4.3
Payment Bond, Performance Bond and
7.3.4.4, 9.6.7, 9.10.3, **11.1.2**
Payments, Progress
9.3, **9.6**, 9.8.5, 9.10.3, 14.2.3, 15.1.4
PAYMENTS AND COMPLETION
9
Payments to Subcontractors
5.4.2, 9.5.1.3, 9.6.2, 9.6.3, 9.6.4, 9.6.7, 14.2.1.2
PCB
10.3.1
Performance Bond and Payment Bond
7.3.4.4, 9.6.7, 9.10.3, **11.1.2**
Permits, Fees, Notices and Compliance with Laws
2.3.1, **3.7**, 3.13, 7.3.4.4, 10.2.2
PERSONS AND PROPERTY, PROTECTION OF
10
Polychlorinated Biphenyl
10.3.1
Product Data, Definition of
3.12.2
Product Data and Samples, Shop Drawings
3.11, **3.12**, 4.2.7
Progress and Completion
4.2.2, **8.2**, 9.8, 9.9.1, 14.1.4, 15.1.4
Progress Payments
9.3, **9.6**, 9.8.5, 9.10.3, 14.2.3, 15.1.4
Project, Definition of
1.1.4
Project Representatives
4.2.10
Property Insurance
10.2.5, **11.2**
Proposal Requirements
1.1.1
PROTECTION OF PERSONS AND PROPERTY
10
Regulations and Laws
1.5, 2.3.2, 3.2.3, 3.6, 3.7, 3.12.10, 3.13, 9.6.4, 9.9.1, 10.2.2, 13.1, 13.3, 13.4.1, 13.4.2, 13.5, 14, 15.2.8, 15.4
Rejection of Work
4.2.6, 12.2.1
Releases and Waivers of Liens
9.3.1, 9.10.2
Representations
3.2.1, 3.5, 3.12.6, 8.2.1, 9.3.3, 9.4.2, 9.5.1, 9.10.1
Representatives
2.1.1, 3.1.1, 3.9, 4.1.1, 4.2.10, 13.2.1
Responsibility for Those Performing the Work
3.3.2, 3.18, 4.2.2, 4.2.3, 5.3, 6.1.3, 6.2, 6.3, 9.5.1, 10
Retainage
9.3.1, 9.6.2, 9.8.5, 9.9.1, 9.10.2, 9.10.3
Review of Contract Documents and Field Conditions by Contractor
3.2, 3.12.7, 6.1.3
Review of Contractor's Submittals by Owner and Architect
3.10.1, 3.10.2, 3.11, 3.12, 4.2, 5.2, 6.1.3, 9.2, 9.8.2
Review of Shop Drawings, Product Data and Samples by Contractor

AIA Document A201 – 2017. Copyright © 1911, 1915, 1918, 1925, 1937, 1951, 1958, 1961, 1963, 1966, 1970, 1976, 1987, 1997, 2007 and 2017. All rights reserved. "The American Institute of Architects," "American Institute of Architects," "AIA," the AIA Logo, and "AIA Contract Documents" are trademarks of The American Institute of Architects. This document was produced at 15:45:22 CDT on 05/11/2026 under Subscription No.20240042832 which expires on 07/01/2026, is not for resale, is licensed for one-time use only, and may only be used in accordance with the AIA Contract Documents® Terms of Service. To report copyright violations, e-mail docinfo@aiacontracts.com.
User Notes:
(69f1008b5f1b2d23ced2487a)

3.12
Rights and Remedies
1.1.2, 2.4, 2.5, 3.5, 3.7.4, 3.15.2, 4.2.6, 5.3, 5.4, 6.1, 6.3, 7.3.1, 8.3, 9.5.1, 9.7, 10.2.5, 10.3, 12.2.1, 12.2.2, 12.2.4, **13.3**, 14, 15.4
Royalties, Patents and Copyrights
3.17
Rules and Notices for Arbitration
15.4.1
Safety of Persons and Property
10.2, 10.4
Safety Precautions and Programs
3.3.1, 4.2.2, 4.2.7, 5.3, **10.1**, 10.2, 10.4
Samples, Definition of
3.12.3
Samples, Shop Drawings, Product Data and
3.11, **3.12**, 4.2.7
Samples at the Site, Documents and
3.11
Schedule of Values
9.2, 9.3.1
Schedules, Construction
3.10, 3.12.1, 3.12.2, 6.1.3, 15.1.6.2
Separate Contracts and Contractors
1.1.4, 3.12.5, 3.14.2, 4.2.4, 4.2.7, 6, 8.3.1, 12.1.2
Separate Contractors, Definition of
6.1.1
Shop Drawings, Definition of
3.12.1
Shop Drawings, Product Data and Samples
3.11, **3.12**, 4.2.7
Site, Use of
3.13, 6.1.1, 6.2.1
Site Inspections
3.2.2, 3.3.3, 3.7.1, 3.7.4, 4.2, 9.9.2, 9.4.2, 9.10.1, 13.4
Site Visits, Architect's
3.7.4, 4.2.2, 4.2.9, 9.4.2, 9.5.1, 9.9.2, 9.10.1, 13.4
Special Inspections and Testing
4.2.6, 12.2.1, 13.4
Specifications, Definition of
1.1.6
Specifications
1.1.1, **1.1.6**, 1.2.2, 1.5, 3.12.10, 3.17, 4.2.14
Statute of Limitations
15.1.2, 15.4.1.1
Stopping the Work
2.2.2, 2.4, 9.7, 10.3, 14.1
Stored Materials
6.2.1, 9.3.2, 10.2.1.2, 10.2.4
Subcontractor, Definition of
5.1.1
SUBCONTRACTORS
5
Subcontractors, Work by
1.2.2, 3.3.2, 3.12.1, 3.18, 4.2.3, 5.2.3, 5.3, 5.4, 9.3.1.2, 9.6.7
Subcontractual Relations
5.3, 5.4, 9.3.1.2, 9.6, 9.10, 10.2.1, 14.1, 14.2.1
Submittals
3.10, 3.11, 3.12, 4.2.7, 5.2.1, 5.2.3, 7.3.4, 9.2, 9.3, 9.8, 9.9.1, 9.10.2, 9.10.3
Submittal Schedule
3.10.2, 3.12.5, 4.2.7
Subrogation, Waivers of
6.1.1, **11.3**
Substances, Hazardous
10.3
Substantial Completion
4.2.9, 8.1.1, 8.1.3, 8.2.3, 9.4.2, **9.8**, 9.9.1, 9.10.3, 12.2, 15.1.2
Substantial Completion, Definition of
9.8.1
Substitution of Subcontractors
5.2.3, 5.2.4
Substitution of Architect
2.3.3
Substitutions of Materials
3.4.2, 3.5, 7.3.8
Sub-subcontractor, Definition of
5.1.2
Subsurface Conditions
3.7.4
Successors and Assigns
13.2
Superintendent
3.9, 10.2.6
Supervision and Construction Procedures
1.2.2, **3.3**, 3.4, 3.12.10, 4.2.2, 4.2.7, 6.1.3, 6.2.4, 7.1.3, 7.3.4, 8.2, 8.3.1, 9.4.2, 10, 12, 14, 15.1.4
Suppliers
1.5, 3.12.1, 4.2.4, 4.2.6, 5.2.1, 9.3, 9.4.2, 9.5.4, 9.6, 9.10.5, 14.2.1
Surety
5.4.1.2, 9.6.8, 9.8.5, 9.10.2, 9.10.3, 11.1.2, 14.2.2, 15.2.7
Surety, Consent of
9.8.5, 9.10.2, 9.10.3
Surveys
1.1.7, 2.3.4
Suspension by the Owner for Convenience
14.3
Suspension of the Work
3.7.5, 5.4.2, 14.3
Suspension or Termination of the Contract
5.4.1.1, 14
Taxes
3.6, 3.8.2.1, 7.3.4.4
Termination by the Contractor
14.1, 15.1.7
Termination by the Owner for Cause
5.4.1.1, **14.2,** 15.1.7
Termination by the Owner for Convenience
14.4
Termination of the Architect
2.3.3
Termination of the Contractor Employment
14.2.2

AIA Document A201 – 2017. Copyright © 1911, 1915, 1918, 1925, 1937, 1951, 1958, 1961, 1963, 1966, 1970, 1976, 1987, 1997, 2007 and 2017. All rights reserved. "The American Institute of Architects," "American Institute of Architects," "AIA," the AIA Logo, and "AIA Contract Documents" are trademarks of The American Institute of Architects. This document was produced at 15:45:22 CDT on 05/11/2026 under Subscription No.20240042832 which expires on 07/01/2026, is not for resale, is licensed for one-time use only, and may only be used in accordance with the AIA Contract Documents® Terms of Service. To report copyright violations, e-mail docinfo@aiacontracts.com.
User Notes:
(69f1008b5f1b2d23ced2487a)

TERMINATION OR SUSPENSION OF THE CONTRACT
14
Tests and Inspections
3.1.3, 3.3.3, 3.7.1, 4.2.2, 4.2.6, 4.2.9, 9.4.2, 9.8.3, 9.9.2, 9.10.1, 10.3.2, 12.2.1, **13.4**
TIME
8
Time, Delays and Extensions of
3.2.4, 3.7.4, 5.2.3, 7.2.1, 7.3.1, 7.4, **8.3**, 9.5.1, 9.7, 10.3.2, 10.4, 14.3.2, 15.1.6, 15.2.5
Time Limits
2.1.2, 2.2, 2.5, 3.2.2, 3.10, 3.11, 3.12.5, 3.15.1, 4.2, 5.2, 5.3, 5.4, 6.2.4, 7.3, 7.4, 8.2, 9.2, 9.3.1, 9.3.3, 9.4.1, 9.5, 9.6, 9.7, 9.8, 9.9, 9.10, 12.2, 13.4, 14, 15.1.2, 15.1.3, 15.4
Time Limits on Claims
3.7.4, 10.2.8, 15.1.2, 15.1.3
Title to Work
9.3.2, 9.3.3
UNCOVERING AND CORRECTION OF WORK
12
Uncovering of Work
12.1
Unforeseen Conditions, Concealed or Unknown
3.7.4, 8.3.1, 10.3
Unit Prices
7.3.3.2, 9.1.2
Use of Documents
1.1.1, 1.5, 2.3.6, 3.12.6, 5.3
Use of Site
3.13, 6.1.1, 6.2.1
Values, Schedule of
9.2, 9.3.1
Waiver of Claims by the Architect
13.3.2
Waiver of Claims by the Contractor
9.10.5, 13.3.2, **15.1.7**
Waiver of Claims by the Owner
9.9.3, 9.10.3, 9.10.4, 12.2.2.1, 13.3.2, 14.2.4, **15.1.7**
Waiver of Consequential Damages
14.2.4, 15.1.7
Waiver of Liens
9.3, 9.10.2, 9.10.4
Waivers of Subrogation
6.1.1, **11.3**
Warranty
3.5, 4.2.9, 9.3.3, 9.8.4, 9.9.1, 9.10.2, 9.10.4, 12.2.2, 15.1.2
Weather Delays
8.3, 15.1.6.2
Work, Definition of
1.1.3
Written Consent
1.5.2, 3.4.2, 3.7.4, 3.12.8, 3.14.2, 4.1.2, 9.3.2, 9.10.3, 13.2, 13.3.2, 15.4.4.2
Written Interpretations
4.2.11, 4.2.12
Written Orders
1.1.1, 2.4, 3.9, 7, 8.2.2, 12.1, 12.2, 13.4.2, 14.3.1

AIA Document A201 – 2017. Copyright © 1911, 1915, 1918, 1925, 1937, 1951, 1958, 1961, 1963, 1966, 1970, 1976, 1987, 1997, 2007 and 2017. All rights reserved. "The American Institute of Architects," "American Institute of Architects," "AIA," the AIA Logo, and "AIA Contract Documents" are trademarks of The American Institute of Architects. This document was produced at 15:45:22 CDT on 05/11/2026 under Subscription No.20240042832 which expires on 07/01/2026, is not for resale, is licensed for one-time use only, and may only be used in accordance with the AIA Contract Documents® Terms of Service. To report copyright violations, e-mail docinfo@aiacontracts.com.
User Notes:
(69f1008b5f1b2d23ced2487a)

ARTICLE 1 GENERAL PROVISIONS

§ 1.1 Basic Definitions

§ 1.1.1 The Contract Documents

The Contract Documents are enumerated in the Agreement between the Owner and Contractor (hereinafter the Agreement) and consist of the Agreement, Conditions of the Contract (General, Supplementary and other Conditions), Drawings, Specifications, Addenda issued prior to execution of the Contract, other documents listed in the Agreement, and Modifications issued after execution of the Contract. A Modification is (1) a written amendment to the Contract signed by both parties, (2) a Change Order, (3) a Construction Change Directive, or (4) a written order for a minor change in the Work issued by the Design Consultant. Unless specifically enumerated in the Agreement, the Contract Documents do not include the advertisement or invitation to bid, Instructions to Bidders, sample forms, other information furnished by the Owner in anticipation of receiving bids or proposals, the Contractor's bid or proposal, or portions of Addenda relating to bidding or proposal requirements.

§ 1.1.2 The Contract

The Contract Documents form the Contract for Construction. The Contract represents the entire and integrated agreement between the parties hereto and supersedes prior negotiations, representations, or agreements, either written or oral. The Contract may be amended or modified only by a Modification. The Contract Documents shall not be construed to create a contractual relationship of any kind (1) between the Contractor and the Design Consultant or the Design Consultant's consultants, (2) between the Owner and a Subcontractor or a Sub-subcontractor, (3) between the Owner and the Design Consultant or the Design Consultant's consultants, or (4) between any persons or entities other than the Owner and the Contractor. The Design Consultant shall, however, be entitled to performance and enforcement of obligations under the Contract intended to facilitate performance of the Design Consultant's duties.

§ 1.1.3 The Work

The term "Work" means the construction and services required by the Contract Documents, whether completed or partially completed, and includes all other labor, materials, equipment, and services provided or to be provided by the Contractor to fulfill the Contractor's obligations. The Work may constitute the whole or a part of the Project.

§ 1.1.4 The Project

The Project is the total construction of which the Work performed under the Contract Documents may be the whole or a part and which may include construction by the Owner and by Separate Contractors.

§ 1.1.5 The Drawings

The Drawings are the graphic and pictorial portions of the Contract Documents showing the design, location and dimensions of the Work, generally including plans, elevations, sections, details, schedules, and diagrams.

§ 1.1.6 The Specifications

The Specifications are that portion of the Contract Documents consisting of the written requirements for materials, equipment, systems, standards and workmanship for the Work, and performance of related services.

§ 1.1.7 Instruments of Service

Instruments of Service are representations, in any medium of expression now known or later developed, of the tangible and intangible creative work performed by theDesign Consultant and the Design Consultant's consultants under their respective professional services agreements. Instruments of Service may include, without limitation, studies, surveys, models, sketches, drawings, specifications, and other similar materials.

§ 1.1.8 Initial Decision Maker

The Initial Decision Maker is the person identified in the Agreement to render initial decisions on Claims in accordance with Section 15.2. The Initial Decision Maker shall not show partiality to the Owner or Contractor and shall not be liable for results of interpretations or decisions rendered in good faith.

§ 1.2 Correlation and Intent of the Contract Documents

§ 1.2.1 The intent of the Contract Documents is to include all items necessary for the proper execution and completion of the Work by the Contractor. The Contract Documents are complementary, and what is required by one shall be as binding as if required by all; performance by the Contractor shall be required only to the extent consistent with the Contract Documents and reasonably inferable from them as being necessary to produce the indicated results.

AIA Document A201 – 2017. Copyright © 1911, 1915, 1918, 1925, 1937, 1951, 1958, 1961, 1963, 1966, 1970, 1976, 1987, 1997, 2007 and 2017. All rights reserved. "The American Institute of Architects," "American Institute of Architects," "AIA," the AIA Logo, and "AIA Contract Documents" are trademarks of The American Institute of Architects. This document was produced at 15:45:22 CDT on 05/11/2026 under Subscription No.20240042832 which expires on 07/01/2026, is not for resale, is licensed for one-time use only, and may only be used in accordance with the AIA Contract Documents® Terms of Service. To report copyright violations, e-mail docinfo@aiacontracts.com.
User Notes: (69f1008b5f1b2d23ced2487a)

§ 1.2.1.1 The invalidity of any provision of the Contract Documents shall not invalidate the Contract or its remaining provisions. If it is determined that any provision of the Contract Documents violates any law, or is otherwise invalid or unenforceable, then that provision shall be revised to the extent necessary to make that provision legal and enforceable. In such case the Contract Documents shall be construed, to the fullest extent permitted by law, to give effect to the parties' intentions and purposes in executing the Contract.

§ 1.2.2 Organization of the Specifications into divisions, sections and articles, and arrangement of Drawings shall not control the Contractor in dividing the Work among Subcontractors or in establishing the extent of Work to be performed by any trade.

§ 1.2.3 Unless otherwise stated in the Contract Documents, words that have well-known technical or construction industry meanings are used in the Contract Documents in accordance with such recognized meanings.

§ 1.3 Capitalization

Terms capitalized in these General Conditions include those that are (1) specifically defined, (2) the titles of numbered articles, or (3) the titles of other documents published by the American Institute of Architects.

§ 1.4 Interpretation

In the interest of brevity the Contract Documents frequently omit modifying words such as "all" and "any" and articles such as "the" and "an," but the fact that a modifier or an article is absent from one statement and appears in another is not intended to affect the interpretation of either statement.

§ 1.5 Ownership and Use of Drawings, Specifications, and Other Instruments of Service

§ 1.5.1 The Design Consultant and the Design Consultant's consultants shall be deemed the authors and owners of their respective Instruments of Service, including the Drawings and Specifications, and retain all common law, statutory, and other reserved rights in their Instruments of Service, including copyrights. The Contractor, Subcontractors, Sub-subcontractors, and suppliers shall not own or claim a copyright in the Instruments of Service. Submittal or distribution to meet official regulatory requirements or for other purposes in connection with the Project is not to be construed as publication in derogation of the Design Consultant's or Design Consultant's consultants' reserved rights.

§ 1.5.2 The Contractor, Subcontractors, Sub-subcontractors, and suppliers are authorized to use and reproduce the Instruments of Service provided to them, subject to any protocols established pursuant to Sections 1.7 and 1.8, solely and exclusively for execution of the Work. All copies made under this authorization shall bear the copyright notice, if any, shown on the Instruments of Service. The Contractor, Subcontractors, Sub-subcontractors, and suppliers may not use the Instruments of Service on other projects or for additions to the Project outside the scope of the Work without the specific written consent of the Owner, Design Consultant, and the Design Consultant's consultants.

§ 1.6 Notice

§ 1.6.1 Except as otherwise provided in Section 1.6.2, where the Contract Documents require one party to notify or give notice to the other party, such notice shall be provided in writing to the designated representative of the party to whom the notice is addressed and shall be deemed to have been duly served if delivered in person, by mail, by courier, or by electronic transmission if a method for electronic transmission is set forth in the Agreement.

§ 1.6.2 Notice of Claims as provided in Section 15.1.3 shall be provided in writing and shall be deemed to have been duly served only if delivered to the designated representative of the party to whom the notice is addressed by certified or registered mail, or by courier providing proof of delivery.

§ 1.7 Digital Data Use and Transmission

The parties shall agree upon written protocols governing the transmission and use of, and reliance on, Instruments of Service or any other information or documentation in digital form.

AIA Document A201 – 2017. Copyright © 1911, 1915, 1918, 1925, 1937, 1951, 1958, 1961, 1963, 1966, 1970, 1976, 1987, 1997, 2007 and 2017. All rights reserved. "The American Institute of Architects," "American Institute of Architects," "AIA," the AIA Logo, and "AIA Contract Documents" are trademarks of The American Institute of Architects. This document was produced at 15:45:22 CDT on 05/11/2026 under Subscription No.20240042832 which expires on 07/01/2026, is not for resale, is licensed for one-time use only, and may only be used in accordance with the AIA Contract Documents® Terms of Service. To report copyright violations, e-mail docinfo@aiacontracts.com.
User Notes: (69f1008b5f1b2d23ced2487a)

ARTICLE 2 OWNER

§ 2.1 General

§ 2.1.1 The Owner is the person or entity identified as such in the Agreement and is referred to throughout the Contract Documents as if singular in number. The Owner shall designate in writing a representative who shall have express authority to bind the Owner with respect to all matters requiring the Owner's approval or authorization. Except as otherwise provided in Section 4.2.1, the Design Consultant does not have such authority. The term "Owner" means the Owner or the Owner's authorized representative.

§ 2.1.2 Alabama law prohibits the enforcement of liens against public property. Contractor shall furnish payment and performance bonds. The Owner shall furnish to the Contractor, within fifteen days after receipt of a written request, information necessary and relevant for the Contractor to evaluate, give notice of, or enforce mechanic's lien rights. Such information shall include a correct statement of the record legal title to the property on which the Project is located, usually referred to as the site, and the Owner's interest therein.

§ 2.2 Evidence of the Owner's Financial Arrangements

§ 2.2.1 Prior to commencement of the Work and upon written request by the Contractor, the Owner shall furnish to the Contractor reasonable evidence that the Owner has made financial arrangements to fulfill the Owner's obligations under the Contract. The Contractor shall have no obligation to commence the Work until the Owner provides such evidence. If commencement of the Work is delayed under this Section 2.2.1, the Contract Time shall be extended appropriately.

§ 2.2.2 Following commencement of the Work and upon written request by the Contractor, the Owner shall furnish to the Contractor reasonable evidence that the Owner has made financial arrangements to fulfill the Owner's obligations under the Contract only if (1) the Owner fails to make payments to the Contractor as the Contract Documents require; (2) the Contractor identifies in writing a reasonable concern regarding the Owner's ability to make payment when due; or (3) a change in the Work materially changes the Contract Sum. If the Owner fails to provide such evidence, as required, within fourteen days of the Contractor's request, the Contractor may immediately stop the Work and, in that event, shall notify the Owner that the Work has stopped. However, if the request is made because a change in the Work materially changes the Contract Sum under (3) above, the Contractor may immediately stop only that portion of the Work affected by the change until reasonable evidence is provided. If the Work is stopped under this Section 2.2.2, the Contract Time shall be extended appropriately and the Contract Sum shall be increased by the amount of the Contractor's reasonable costs of shutdown, delay and start-up, plus interest as provided in the Contract Documents.

§ 2.2.3 After the Owner furnishes evidence of financial arrangements under this Section 2.2, the Owner shall not materially vary such financial arrangements without prior notice to the Contractor.

§ 2.2.4 Where the Owner has designated information furnished under this Section 2.2 as "confidential," the Contractor shall keep the information confidential and shall not disclose it to any other person. However, the Contractor may disclose "confidential" information, after seven (7) days' notice to the Owner, where disclosure is required by law, including a subpoena or other form of compulsory legal process issued by a court or governmental entity, or by court or arbitrator(s) order. The Contractor may also disclose "confidential" information to its employees, consultants, sureties, Subcontractors and their employees, Sub-subcontractors, and others who need to know the content of such information solely and exclusively for the Project and who agree to maintain the confidentiality of such information.

§ 2.3 Information and Services Required of the Owner

§ 2.3.1 Except for permits and fees that are the responsibility of the Contractor under the Contract Documents, including those required under Section 3.7.1, the Owner shall secure and pay for necessary approvals, easements, assessments and charges required for construction, use or occupancy of permanent structures or for permanent changes in existing facilities.

§ 2.3.2 The Owner shall retain a Design Consultant for this project, that person is referred to as the Design Consultant in this document, and shall preform duties of design and supervision of construction and other duties as described herein, if a provision is left to an Architect it is the Owner's intention that said Design Conuslant shall be repsonsible.

AIA Document A201 – 2017. Copyright © 1911, 1915, 1918, 1925, 1937, 1951, 1958, 1961, 1963, 1966, 1970, 1976, 1987, 1997, 2007 and 2017. All rights reserved. "The American Institute of Architects," "American Institute of Architects," "AIA," the AIA Logo, and "AIA Contract Documents" are trademarks of The American Institute of Architects. This document was produced at 15:45:22 CDT on 05/11/2026 under Subscription No.20240042832 which expires on 07/01/2026, is not for resale, is licensed for one-time use only, and may only be used in accordance with the AIA Contract Documents® Terms of Service. To report copyright violations, e-mail docinfo@aiacontracts.com.
User Notes: (69f1008b5f1b2d23ced2487a)

§ 2.3.3 If the employment of the Design Consultant terminates, the Owner shall employ a successor to whom the Contractor has no reasonable objection and whose status under the Contract Documents shall be that of the Design Consultant.

§ 2.3.4 The Owner shall furnish surveys describing physical characteristics, legal limitations and utility locations for the site of the Project, and a legal description of the site. The Contractor shall be entitled to rely on the accuracy of information furnished by the Owner but shall exercise proper precautions relating to the safe performance of the Work.

§ 2.3.5 The Owner shall furnish information or services required of the Owner by the Contract Documents with reasonable promptness. The Owner shall also furnish any other information or services under the Owner's control and relevant to the Contractor's performance of the Work with reasonable promptness after receiving the Contractor's written request for such information or services.

§ 2.3.6 Unless otherwise provided in the Contract Documents, the Owner shall furnish to the Contractor one copy of the Contract Documents for purposes of making reproductions pursuant to Section 1.5.2.

§ 2.4 Owner's Right to Stop the Work

If the Contractor fails to correct Work that is not in accordance with the requirements of the Contract Documents as required by Section 12.2 or repeatedly fails to carry out Work in accordance with the Contract Documents, the Owner may issue a written order to the Contractor to stop the Work, or any portion thereof, until the cause for such order has been eliminated; however, the right of the Owner to stop the Work shall not give rise to a duty on the part of the Owner to exercise this right for the benefit of the Contractor or any other person or entity, except to the extent required by Section 6.1.3.

§ 2.5 Owner's Right to Carry Out the Work

If the Contractor defaults or neglects to carry out the Work in accordance with the Contract Documents and fails within a ten-day period after receipt of notice from the Owner to commence and continue correction of such default or neglect with diligence and promptness, the Owner may, without prejudice to other remedies the Owner may have, correct such default or neglect. Such action by the Owner and amounts charged to the Contractor are both subject to prior approval of the Design Consultant and the Design Consultant may, pursuant to Section 9.5.1, withhold or nullify a Certificate for Payment in whole or in part, to the extent reasonably necessary to reimburse the Owner for the reasonable cost of correcting such deficiencies, including Owner's expenses and compensation for the Design Consultant's additional services made necessary by such default, neglect, or failure. If current and future payments are not sufficient to cover such amounts, the Contractor shall pay the difference to the Owner. If the Contractor disagrees with the actions of the Owner or the Design Consultant, or the amounts claimed as costs to the Owner, the Contractor may file a Claim pursuant to Article 15.

ARTICLE 3 CONTRACTOR

§ 3.1 General

§ 3.1.1 The Contractor is the person or entity identified as such in the Agreement and is referred to throughout the Contract Documents as if singular in number. The Contractor shall be lawfully licensed, if required in the jurisdiction where the Project is located. The Contractor shall designate in writing a representative who shall have express authority to bind the Contractor with respect to all matters under this Contract. The term "Contractor" means the Contractor or the Contractor's authorized representative.

§ 3.1.2 The Contractor shall perform the Work in accordance with the Contract Documents.

§ 3.1.3 The Contractor shall not be relieved of its obligations to perform the Work in accordance with the Contract Documents either by activities or duties of the Design Consultant in the Design Consultant's administration of the Contract, or by tests, inspections or approvals required or performed by persons or entities other than the Contractor.

§ 3.2 Review of Contract Documents and Field Conditions by Contractor

§ 3.2.1 Execution of the Contract by the Contractor is a representation that the Contractor has visited the site, become generally familiar with local conditions under which the Work is to be performed, and correlated personal observations with requirements of the Contract Documents.

AIA Document A201 – 2017. Copyright © 1911, 1915, 1918, 1925, 1937, 1951, 1958, 1961, 1963, 1966, 1970, 1976, 1987, 1997, 2007 and 2017. All rights reserved. "The American Institute of Architects," "American Institute of Architects," "AIA," the AIA Logo, and "AIA Contract Documents" are trademarks of The American Institute of Architects. This document was produced at 15:45:22 CDT on 05/11/2026 under Subscription No.20240042832 which expires on 07/01/2026, is not for resale, is licensed for one-time use only, and may only be used in accordance with the AIA Contract Documents® Terms of Service. To report copyright violations, e-mail docinfo@aiacontracts.com.
User Notes: (69f1008b5f1b2d23ced2487a)

§ 3.2.2 Because the Contract Documents are complementary, the Contractor shall, before starting each portion of the Work, carefully study and compare the various Contract Documents relative to that portion of the Work, as well as the information furnished by the Owner pursuant to Section 2.3.4, shall take field measurements of any existing conditions related to that portion of the Work, and shall observe any conditions at the site affecting it. These obligations are for the purpose of facilitating coordination and construction by the Contractor and are not for the purpose of discovering errors, omissions, or inconsistencies in the Contract Documents; however, the Contractor shall promptly report to the Design Consultant & Owner any errors, inconsistencies or omissions discovered by or made known to the Contractor as a request for information in such form as the Design Consultant may require. It is recognized that the Contractor's review is made in the Contractor's capacity as a contractor and not as a licensed design professional, unless otherwise specifically provided in the Contract Documents.

§ 3.2.3 The Contractor is not required to ascertain that the Contract Documents are in accordance with applicable laws, statutes, ordinances, codes, rules and regulations, or lawful orders of public authorities, but the Contractor shall promptly report to the Design Consultant & Owner any nonconformity discovered by or made known to the Contractor as a request for information in such form as the Design Consultant or Owner may require.

§ 3.2.4 If the Contractor believes that additional cost or time is involved because of clarifications or instructions the Design Consultant issues in response to the Contractor's notices or requests for information pursuant to Sections 3.2.2 or 3.2.3, the Contractor shall submit Claims as provided in Article 15. If the Contractor fails to perform the obligations of Sections 3.2.2 or 3.2.3, the Contractor shall pay such costs and damages to the Owner, subject to Section 15.1.7, as would have been avoided if the Contractor had performed such obligations. If the Contractor performs those obligations, the Contractor shall not be liable to the Owner or Design Consultant for damages resulting from errors, inconsistencies or omissions in the Contract Documents, for differences between field measurements or conditions and the Contract Documents, or for nonconformities of the Contract Documents to applicable laws, statutes, ordinances, codes, rules and regulations, and lawful orders of public authorities.

§ 3.3 Supervision and Construction Procedures

§ 3.3.1 The Contractor shall supervise and direct the Work, using the Contractor's best skill and attention. The Contractor shall be solely responsible for, and have control over, construction means, methods, techniques, sequences, and procedures, and for coordinating all portions of the Work under the Contract. If the Contract Documents give specific instructions concerning construction means, methods, techniques, sequences, or procedures, the Contractor shall evaluate the jobsite safety thereof and shall be solely responsible for the jobsite safety of such means, methods, techniques, sequences, or procedures. If the Contractor determines that such means, methods, techniques, sequences or procedures may not be safe, the Contractor shall give timely notice to the Owner and Design Consultant, and shall propose alternative means, methods, techniques, sequences, or procedures. The Design Consultant and/or Owner shall evaluate the proposed alternative solely for conformance with the design intent for the completed construction. Unless the Design Consultant objects to the Contractor's proposed alternative, the Contractor shall perform the Work using its alternative means, methods, techniques, sequences, or procedures.

§ 3.3.2 The Contractor shall be responsible to the Owner for acts and omissions of the Contractor's employees, Subcontractors and their agents and employees, and other persons or entities performing portions of the Work for, or on behalf of, the Contractor or any of its Subcontractors.

§ 3.3.3 The Contractor shall be responsible for inspection of portions of Work already performed to determine that such portions are in proper condition to receive subsequent Work.

§3.3.4 Three days after the opening of sealed Bid, the Contractor shall furnish, an outline of the education, experience and character of the Contractor's project manager, superintendent, and engineer. Any future substitution must have prior written approval of the Owner.

§ 3.4 Labor and Materials

§ 3.4.1 Unless otherwise provided in the Contract Documents, the Contractor shall provide and pay for labor, materials, equipment, tools, construction equipment and machinery, water, heat, utilities, transportation, and other facilities and services necessary for proper execution and completion of the Work, whether temporary or permanent and whether or not incorporated or to be incorporated in the Work.

§ 3.4.1.1 As applicable, the Contractor shall be responsible at the appropriate time during construction of the Project to have all permanent meters installed (electrical, water, gas, etc.) and all utilities connected prior to the time of Final Inspection. The Contractor shall pay all utility costs until the Project is accepted by the City of Mobile.

AIA Document A201 – 2017. Copyright © 1911, 1915, 1918, 1925, 1937, 1951, 1958, 1961, 1963, 1966, 1970, 1976, 1987, 1997, 2007 and 2017. All rights reserved. "The American Institute of Architects," "American Institute of Architects," "AIA," the AIA Logo, and "AIA Contract Documents" are trademarks of The American Institute of Architects. This document was produced at 15:45:22 CDT on 05/11/2026 under Subscription No.20240042832 which expires on 07/01/2026, is not for resale, is licensed for one-time use only, and may only be used in accordance with the AIA Contract Documents® Terms of Service. To report copyright violations, e-mail docinfo@aiacontracts.com.
User Notes: (69f1008b5f1b2d23ced2487a)

§ 3.4.2 Except in the case of minor changes in the Work approved by the Design Consultant in accordance with Section 3.12.8 or ordered by the Design Consultant in accordance with Section 7.4, the Contractor may make substitutions only with the consent of the Owner, after evaluation by the Design Consultant and in accordance with a Change Order or Construction Change Directive. Construction Change Directive's should be used only in emergencies and in compliance with Alabama Code Title 39 or 41 as applicable.

§ 3.4.3 The Contractor shall enforce strict discipline and good order among the Contractor's employees and other persons carrying out the Work. The Contractor shall not permit employment of unfit persons or persons not properly skilled in tasks assigned to them.

§ 3.4.4 The Contractor is responsible for the skill of Work. All workers engaged on special work or skilled Work in any supervisory position or trade shall be qualified and have had sufficient education, training,and experience as a recognized professional or master mechanic in such Work to perform it properly and satisfactorily as prescribed in the Contract.

§ 3.4.5 Any project manager, superintendent, engineer, foreman, or workman employed by the Contractor or by a Subcontractor who, in the opinion of the Design Consultant and/or Owner, does not perform his/her Work in a proper and skillful manner or becomes party to disrespectful, intemperate, disorderly, intoxicated, or dishonest behavior, or uses foul language, fights, commits criminal act(s), falsifies records and construction, covers-up faulty Work or materials, does not comprehend or follow instructions, does not get along with the Design Consultant or Owner's representative, or is otherwise objectionable, shall at the written request by the Design Consultant, be discharged within 24 hours by the Contractor or Subcontractor employing such project manager, superintendent, engineer, foreman or workman, and shall not be employed again or any portion of the Work without the written consent of the Design Consultant and/or Owner.

§ 3.4.6 Should the Contractor fail to remove such person or persons specified in Article 3.4.5 hereinabove or fail to furnish suitable and sufficient machinery, equipment, materials or qualified labor force for the proper execution of the Work, the Design Consultant may withhold all payments which are or may become due to the Contractor or may suspend the Work until such orders are complied with.

§ 3.4.6 During the performance of Work, Contractor shall follow City of Mobile Code § 14-9 Nondiscrimination Provisions:

1. The contractor will not discriminate against any employee or applicant for employment because of race, creed, color, national origin or disability. The contractor will take affirmative action to ensure that applicants are employed, and that employees are treated during employment, without regard to their race, creed, color, national origin or disability. Such action shall include but not be limited to the following: Employment, upgrading, demotion or transfer; recruitment or recruitment advertising; layoff or termination; rates of pay or other forms of compensation; and selection for training, including apprenticeship. The contractor agrees to post in conspicuous places, available to employees and applicants for employment, notices to be provided by the contracting agency of the municipality setting forth the provisions of this nondiscrimination clause.
2. The contractor will, in all solicitations or advertisements for employees placed by or on behalf of the contractor, state that all qualifying applicants will receive consideration for employment without regard to race, creed, color, national origin or disability.
3. The contractor will send to each labor union or representative of workers with which he has a collective bargaining agreement or other contract or understanding, a notice to be provided by the municipal contracting agency, advising the labor union or worker's representative of the contractor's commitments under this section, and shall post copies of such notice in conspicuous places available to employees and applicants for employment.
4. In the event of the contractor's noncompliance with the nondiscrimination clauses of this contract, this contract may be canceled, terminated or suspended in whole or in part and the contractor may be declared ineligible for further municipal contracts.
5. The contractor will include the provisions of this section in every subcontract or purchase order unless exempted by written orders of the governing body of the City of Mobile so that such provisions will be binding upon each subcontractor or vendor.
6. Each contractor will agree to the above in writing, including the contractor's commitment

AIA Document A201 – 2017. Copyright © 1911, 1915, 1918, 1925, 1937, 1951, 1958, 1961, 1963, 1966, 1970, 1976, 1987, 1997, 2007 and 2017. All rights reserved. "The American Institute of Architects," "American Institute of Architects," "AIA," the AIA Logo, and "AIA Contract Documents" are trademarks of The American Institute of Architects. This document was produced at 15:45:22 CDT on 05/11/2026 under Subscription No.20240042832 which expires on 07/01/2026, is not for resale, is licensed for one-time use only, and may only be used in accordance with the AIA Contract Documents® Terms of Service. To report copyright violations, e-mail docinfo@aiacontracts.com.
User Notes: (69f1008b5f1b2d23ced2487a)

to follow the Americans with Disabilities Act of 1990.

§ 3.4.6 During the performance of Work, Contractor shall follow City of Mobile Code § 14-10 to encourage participation of socially and economically disadvantaged contractors by utilizing the Subcontracting and Major Supplier Plan included in the Bid Package.

§ 3.5 Warranty

§ 3.5 Warranty

§ 3.5.1 The Contractor warrants to the Owner and Design Consultant that materials and equipment furnished under the Contract will be of good quality and new unless the Contract Documents require or permit otherwise. The Contractor further warrants that the Work will conform to the requirements of the Contract Documents and will be free from defects, except for those inherent in the quality of the Work the Contract Documents require or permit. Work, materials, or equipment not conforming to these requirements may be considered defective. The Contractor's warranty excludes remedy for damage or defect caused by abuse, alterations to the Work not executed by the Contractor, improper or insufficient maintenance, improper operation, or normal wear and tear and normal usage. If required by the Design Consultant, the Contractor shall furnish satisfactory evidence as to the kind and quality of materials and equipment.

§ 3.5.2 All material, equipment, or other special warranties required by the Contract Documents shall be issued in the name of the Owner, or shall be transferable to the Owner, and shall commence in accordance with Section 9.8.4.

§ 3.6 Taxes

The Contractor shall pay sales, consumer, use and similar taxes for the Work provided by the Contractor that are legally enacted when bids are received or negotiations concluded, whether or not yet effective or merely scheduled to go into effect. Most Owner projects are exempt from Sales Tax and should be accounted for in bid package. A completed Form C-3A: Accounting of Sales Tax must be submitted with all Bid Forms. Submission of Sales Tax Form C-3A with the Proposal Form is required

§ 3.7 Permits, Fees, Notices and Compliance with Laws

§ 3.7.1 Unless otherwise provided in the Contract Documents, the Contractor shall secure City of Mobile building permit without cost, and shall secure and pay for any other permits, fees, licenses, and inspections by government agencies necessary for proper execution and completion of the Work that are customarily secured after execution of the Contract and legally required at the time bids are received or negotiations concluded.

§ 3.7.1.1 The Contractor shall secure building and other permits customarily obtained from the City of Mobile at no cost.

§ 3.7.2 The Contractor shall comply with and give notices required by applicable laws, statutes, ordinances, codes, rules and regulations, and lawful orders of public authorities applicable to performance of the Work.

§ 3.7.3 If the Contractor performs Work knowing it to be contrary to applicable laws, statutes, ordinances, codes, rules and regulations, or lawful orders of public authorities, the Contractor shall assume appropriate responsibility for such Work and shall bear the costs attributable to correction.

§ 3.7.4 Concealed or Unknown Conditions

If the Contractor encounters conditions at the site that are (1) subsurface or otherwise concealed physical conditions that differ materially from those indicated in the Contract Documents or (2) unknown physical conditions of an unusual nature that differ materially from those ordinarily found to exist and generally recognized as inherent in construction activities of the character provided for in the Contract Documents, the Contractor shall promptly provide notice to the Owner and the Design Consultant before conditions are disturbed and in no event later than 14 days after first observance of the conditions. The Design Consultant will promptly investigate such conditions and, if the Design Consultant determines that they differ materially and cause an increase or decrease in the Contractor's cost of, or time required for, performance of any part of the Work, will recommend that an equitable adjustment be made in the Contract Sum or Contract Time, or both. If the Design Consultant determines that the conditions at the site are not materially different from those indicated in the Contract Documents and that no change in the terms of the Contract is justified, the Design Consultant shall promptly notify the Owner and Contractor, stating the reasons. If either party disputes the Design Consultant's determination or recommendation, that party may submit a Claim as provided in Article 15.

AIA Document A201 – 2017. Copyright © 1911, 1915, 1918, 1925, 1937, 1951, 1958, 1961, 1963, 1966, 1970, 1976, 1987, 1997, 2007 and 2017. All rights reserved. "The American Institute of Architects," "American Institute of Architects," "AIA," the AIA Logo, and "AIA Contract Documents" are trademarks of The American Institute of Architects. This document was produced at 15:45:22 CDT on 05/11/2026 under Subscription No.20240042832 which expires on 07/01/2026, is not for resale, is licensed for one-time use only, and may only be used in accordance with the AIA Contract Documents® Terms of Service. To report copyright violations, e-mail docinfo@aiacontracts.com.
User Notes: (69f1008b5f1b2d23ced2487a)

§ 3.7.5 If, in the course of the Work, the Contractor encounters human remains or recognizes the existence of burial markers, archaeological sites or wetlands not indicated in the Contract Documents, the Contractor shall immediately suspend any operations that would affect them and shall notify the Owner and Design Consultant. Upon receipt of such notice, the Owner shall promptly take any action necessary to obtain governmental authorization required to resume the operations. The Contractor shall continue to suspend such operations until otherwise instructed by the Owner but shall continue with all other operations that do not affect those remains or features. Requests for adjustments in the Contract Sum and Contract Time arising from the existence of such remains or features may be made as provided in Article 15.

§ 3.8 Allowances

§ 3.8.1 The Contractor shall include in the Contract Sum all allowances stated in the Contract Documents. Items covered by allowances shall be supplied for such amounts and by such persons or entities as the Owner may direct, but the Contractor shall not be required to employ persons or entities to whom the Contractor has reasonable objection.

§ 3.8.2 Unless otherwise provided in the Contract Documents,

- **.1** allowances shall cover the cost to the Contractor of materials and equipment delivered at the site and all required taxes, less applicable trade discounts;
- **.2** Contractor's costs for unloading and handling at the site, labor, installation costs, overhead, profit, and other expenses contemplated for stated allowance amounts shall be included in the Contract Sum but not in the allowances; and
- **.3** whenever costs are more than or less than allowances, the Contract Sum shall be adjusted accordingly by Change Order. The amount of the Change Order shall reflect (1) the difference between actual costs and the allowances under Section 3.8.2.1 and (2) changes in Contractor's costs under Section 3.8.2.2.

§ 3.8.3 Materials and equipment under an allowance shall be selected by the Owner with reasonable promptness.

§ 3.9 Superintendent

§ 3.9.1 The Contractor shall employ a competent superintendent and necessary assistants who shall be in attendance at the Project site during performance of the Work. The superintendent shall represent the Contractor, and communications given to the superintendent shall be as binding as if given to the Contractor.

§ 3.9.2 The Contractor, as soon as practicable after award of the Contract, shall notify the Owner and Design Consultant of the name and qualifications of a proposed superintendent. Within 14 days of receipt of the information, the Design Consultant may notify the Contractor, stating whether the Owner or the Design Consultant (1) has reasonable objection to the proposed superintendent or (2) requires additional time for review. Failure of the Design Consultant to provide notice within the 14-day period shall constitute notice of no reasonable objection.

§ 3.9.3 The Contractor shall not employ a proposed superintendent to whom the Owner or Design Consultant has made reasonable and timely objection. The Contractor shall not change the superintendent without the Owner's consent, which shall not unreasonably be withheld or delayed.

§ 3.10 Contractor's Construction and Submittal Schedules

§ 3.10.1 The Contractor, within seven days after being awarded the Contract, shall submit for the Owner's and Design Consultant's information a Contractor's construction schedule for the Work. The schedule shall contain detail appropriate for the Project, including (1) the date of commencement of the Work, interim schedule milestone dates, and the date of Substantial Completion; (2) an apportionment of the Work by construction activity; and (3) the time required for completion of each portion of the Work. The schedule shall provide for the orderly progression of the Work to completion and shall not exceed time limits current under the Contract Documents. The schedule shall be revised at appropriate intervals as required by the conditions of the Work and Project.

§ 3.10.2 The Contractor, within seven days after being awarded the Contract and thereafter as necessary to maintain a current submittal schedule, shall submit a submittal schedule for the Design Consultant's approval. The Design Consultant's approval shall not be unreasonably delayed or withheld. The submittal schedule shall (1) be coordinated with the Contractor's construction schedule, and (2) allow the Design Consultant reasonable time to

AIA Document A201 – 2017. Copyright © 1911, 1915, 1918, 1925, 1937, 1951, 1958, 1961, 1963, 1966, 1970, 1976, 1987, 1997, 2007 and 2017. All rights reserved. "The American Institute of Architects," "American Institute of Architects," "AIA," the AIA Logo, and "AIA Contract Documents" are trademarks of The American Institute of Architects. This document was produced at 15:45:22 CDT on 05/11/2026 under Subscription No.20240042832 which expires on 07/01/2026, is not for resale, is licensed for one-time use only, and may only be used in accordance with the AIA Contract Documents® Terms of Service. To report copyright violations, e-mail docinfo@aiacontracts.com.
User Notes: (69f1008b5f1b2d23ced2487a)

review submittals. If the Contractor fails to submit a submittal schedule, or fails to provide submittals in accordance with the approved submittal schedule, the Contractor shall not be entitled to any increase in Contract Sum or extension of Contract Time based on the time required for review of submittals.

§ 3.10.3 The Contractor shall perform the Work in general accordance with the most recent schedules submitted to the Owner and Design Consultant.

§ 3.11 Documents and Samples at the Site

The Contractor shall make available, at the Project site, the Contract Documents, including Change Orders, Construction Change Directives, and other Modifications, in good order and marked currently to indicate field changes and selections made during construction, and the approved Shop Drawings, Product Data, Samples, and similar required submittals. These shall be in electronic form or paper copy, available to the Design Consultant and Owner, and delivered to the Design Consultant for submittal to the Owner upon completion of the Work as a record of the Work as constructed.

§ 3.12 Shop Drawings, Product Data and Samples

§ 3.12.1 Shop Drawings are drawings, diagrams, schedules, and other data specially prepared for the Work by the Contractor or a Subcontractor, Sub-subcontractor, manufacturer, supplier, or distributor to illustrate some portion of the Work.

§ 3.12.2 Product Data are illustrations, standard schedules, performance charts, instructions, brochures, diagrams, and other information furnished by the Contractor to illustrate materials or equipment for some portion of the Work.

§ 3.12.3 Samples are physical examples that illustrate materials, equipment, or workmanship, and establish standards by which the Work will be judged.

§ 3.12.4 Shop Drawings, Product Data, Samples, and similar submittals are not Contract Documents. Their purpose is to demonstrate how the Contractor proposes to conform to the information given and the design concept expressed in the Contract Documents for those portions of the Work for which the Contract Documents require submittals. Review by the Design Consultant is subject to the limitations of Section 4.2.7. Informational submittals upon which the Design Consultant is not expected to take responsive action may be so identified in the Contract Documents. Submittals that are not required by the Contract Documents may be returned by the Design Consultant without action.

§ 3.12.5 The Contractor shall review for compliance with the Contract Documents, approve, and submit to the Design Consultant, Shop Drawings, Product Data, Samples, and similar submittals required by the Contract Documents, in accordance with the submittal schedule approved by the Design Consultant or, in the absence of an approved submittal schedule, with reasonable promptness and in such sequence as to cause no delay in the Work or in the activities of the Owner or of Separate Contractors. Submittals which are not marked as reviewed for compliance with the Contract Documents and approved by the Contractor may be returned by the Design Consultant without action. Wherever Shop Drawings are required in these Specifications, Shop Drawings shall be submitted for approval before materials are fabricated. Drawings shall show complete details. Th Contractor shall check and approve them either in writing or by stamp before forwarding to the Design Consultant. The Design Consultant will mark copies "Approved" if correct; or, "Approved As Noted" if only minor corrections are necessary. If major corrections are necessary, they will be noted on the Shop Drawings and they will be returned to the Contractor for correction and resubmission. Submit four (4) copies for Design Consultant's and Owner's use plus the number of copies the Contractor requires for his/her own use.

§ 3.12.6 By submitting Shop Drawings, Product Data, Samples, and similar submittals, the Contractor represents to the Owner and Design Consultant that the Contractor has (1) reviewed and approved them, (2) determined and verified materials, field measurements and field construction criteria related thereto, or will do so, and (3) checked and coordinated the information contained within such submittals with the requirements of the Work and of the Contract Documents.

§ 3.12.6 By submitting Shop Drawings, Product Data, Samples, and similar submittals, the Contractor represents to the Owner and Design Consultant that the Contractor has (1) reviewed and approved them, (2) determined and verified materials, field measurements and field construction criteria related thereto, or will do so, and (3) checked and coordinated the information contained within such submittals with the requirements of the Work and of the Contract Documents.

AIA Document A201 – 2017. Copyright © 1911, 1915, 1918, 1925, 1937, 1951, 1958, 1961, 1963, 1966, 1970, 1976, 1987, 1997, 2007 and 2017. All rights reserved. "The American Institute of Architects," "American Institute of Architects," "AIA," the AIA Logo, and "AIA Contract Documents" are trademarks of The American Institute of Architects. This document was produced at 15:45:22 CDT on 05/11/2026 under Subscription No.20240042832 which expires on 07/01/2026, is not for resale, is licensed for one-time use only, and may only be used in accordance with the AIA Contract Documents® Terms of Service. To report copyright violations, e-mail docinfo@aiacontracts.com.
User Notes: (69f1008b5f1b2d23ced2487a)

§ 3.12.7 The Contractor shall perform no portion of the Work for which the Contract Documents require submittal and review of Shop Drawings, Product Data, Samples, or similar submittals, until the respective submittal has been approved by the Design Consultant.

§ 3.12.8 The Work shall be in accordance with approved submittals except that the Contractor shall not be relieved of responsibility for deviations from the requirements of the Contract Documents by the Design Consultant's approval of Shop Drawings, Product Data, Samples, or similar submittals, unless the Contractor has specifically notified the Design Consultant of such deviation at the time of submittal and (1) the Design Consultant has given written approval to the specific deviation as a minor change in the Work, or (2) a Change Order or Construction Change Directive has been issued authorizing the deviation. The Contractor shall not be relieved of responsibility for errors or omissions in Shop Drawings, Product Data, Samples, or similar submittals, by the Design Consultant's approval thereof.

§ 3.12.9 The Contractor shall direct specific attention, in writing or on resubmitted Shop Drawings, Product Data, Samples, or similar submittals, to revisions other than those requested by the Design Consultant on previous submittals. In the absence of such notice, the Design Consultant's approval of a resubmission shall not apply to such revisions.

§ 3.12.10 The Contractor shall not be required to provide professional services that constitute the practice of architecture or engineering unless such services are specifically required by the Contract Documents for a portion of the Work or unless the Contractor needs to provide such services in order to carry out the Contractor's responsibilities for construction means, methods, techniques, sequences, and procedures. The Contractor shall not be required to provide professional services in violation of applicable law.

§ 3.12.10.1 If professional design services or certifications by a design professional related to systems, materials, or equipment are specifically required of the Contractor by the Contract Documents, the Owner and the Design Consultant will specify all performance and design criteria that such services must satisfy. The Contractor shall be entitled to rely upon the adequacy and accuracy of the performance and design criteria provided in the Contract Documents. The Contractor shall cause such services or certifications to be provided by an appropriately licensed design professional, whose signature and seal shall appear on all drawings, calculations, specifications, certifications, Shop Drawings, and other submittals prepared by such professional. Shop Drawings, and other submittals related to the Work, designed or certified by such professional, if prepared by others, shall bear such professional's written approval when submitted to the Design Consultant. The Owner and the Design Consultant shall be entitled to rely upon the adequacy and accuracy of the services, certifications, and approvals performed or provided by such design professionals, provided the Owner and Design Consultant have specified to the Contractor the performance and design criteria that such services must satisfy. Pursuant to this Section 3.12.10, the Design Consultant will review and approve or take other appropriate action on submittals only for the limited purpose of checking for conformance with information given and the design concept expressed in the Contract Documents.

§ 3.12.10.2 If the Contract Documents require the Contractor's design professional to certify that the Work has been performed in accordance with the design criteria, the Contractor shall furnish such certifications to the Design Consultant at the time and in the form specified by the Design Consultant.

§ 3.13 Use of Site

The Contractor shall confine operations at the site to areas permitted by applicable laws, statutes, ordinances, codes, rules and regulations, lawful orders of public authorities, and the Contract Documents and shall not unreasonably encumber the site with materials or equipment.

§ 3.14 Cutting and Patching

§ 3.14.1 The Contractor shall be responsible for cutting, fitting, or patching required to complete the Work or to make its parts fit together properly. All areas requiring cutting, fitting, or patching shall be restored to the condition existing prior to the cutting, fitting, or patching, unless otherwise required by the Contract Documents.

§ 3.14.2 The Contractor shall not damage or endanger a portion of the Work or fully or partially completed construction of the Owner or Separate Contractors by cutting, patching, or otherwise altering such construction, or by excavation. The Contractor shall not cut or otherwise alter construction by the Owner or a Separate Contractor except with written consent of the Owner and of the Separate Contractor. Consent shall not be unreasonably withheld. The Contractor shall not unreasonably withhold, from the Owner or a Separate Contractor, its consent to

AIA Document A201 – 2017. Copyright © 1911, 1915, 1918, 1925, 1937, 1951, 1958, 1961, 1963, 1966, 1970, 1976, 1987, 1997, 2007 and 2017. All rights reserved. "The American Institute of Architects," "American Institute of Architects," "AIA," the AIA Logo, and "AIA Contract Documents" are trademarks of The American Institute of Architects. This document was produced at 15:45:22 CDT on 05/11/2026 under Subscription No.20240042832 which expires on 07/01/2026, is not for resale, is licensed for one-time use only, and may only be used in accordance with the AIA Contract Documents® Terms of Service. To report copyright violations, e-mail docinfo@aiacontracts.com.
User Notes: (69f1008b5f1b2d23ced2487a)

cutting or otherwise altering the Work.

§ 3.15 Cleaning Up

§ 3.15.1 The Contractor shall keep the premises and surrounding area free from accumulation of waste materials and rubbish caused by operations under the Contract. At completion of the Work, the Contractor shall remove waste materials, rubbish, the Contractor's tools, construction equipment, machinery, and surplus materials from and about the Project.

§ 3.15.2 If the Contractor fails to clean up as provided in the Contract Documents, the Owner may do so and the Owner shall be entitled to reimbursement from the Contractor.

§ 3.16 Access to Work

The Contractor shall provide the Owner and Design Consultant with access to the Work in preparation and progress wherever located.

§ 3.17 Royalties, Patents and Copyrights

The Contractor shall pay all royalties and license fees. The Contractor shall defend suits or claims for infringement of copyrights and patent rights and shall hold the Owner and Design Consultant harmless from loss on account thereof, but shall not be responsible for defense or loss when a particular design, process, or product of a particular manufacturer or manufacturers is required by the Contract Documents, or where the copyright violations are contained in Drawings, Specifications, or other documents prepared by the Owner or Design Consultant. However, if an infringement of a copyright or patent is discovered by, or made known to, the Contractor, the Contractor shall be responsible for the loss unless the information is promptly furnished to the Owner and/or Design Consultant.

§ 3.18 Indemnification

§ 3.18.1 To the fullest extent permitted by law, the Contractor shall indemnify and hold harmless the Owner, Design Consultant, Design Consultant's consultants, and agents and employees of any of them from and against claims, damages, losses, and expenses, including but not limited to attorneys' fees, arising out of or resulting from performance of the Work, provided that such claim, damage, loss, or expense is attributable to bodily injury, sickness, disease or death, or to injury to or destruction of tangible property (other than the Work itself), but only to the extent caused by the negligent acts or omissions of the Contractor, a Subcontractor, anyone directly or indirectly employed by them, or anyone for whose acts they may be liable, regardless of whether or not such claim, damage, loss, or expense is caused in part by a party indemnified hereunder. Such obligation shall not be construed to negate, abridge, or reduce other rights or obligations of indemnity that would otherwise exist as to a party or person described in this Section 3.18.

§ 3.18.2 In claims against any person or entity indemnified under this Section 3.18 by an employee of the Contractor, a Subcontractor, anyone directly or indirectly employed by them, or anyone for whose acts they may be liable, the indemnification obligation under Section 3.18.1 shall not be limited by a limitation on amount or type of damages, compensation, or benefits payable by or for the Contractor or a Subcontractor under workers' compensation acts, disability benefit acts, or other employee benefit acts.

ARTICLE 4 Design Consultant

§ 4.1 General

§ 4.1.1 The Design Consultantt is the person or entity retained by the Owner pursuant to Section 2.3.2 and identified as such in the Agreement.

§ 4.1.2 Duties, responsibilities, and limitations of authority of the Design Consultant as set forth in the Contract Documents shall not be restricted, modified, or extended without written consent of the Owner, Contractor, and Design Consultant. Consent shall not be unreasonably withheld.

§ 4.2 Administration of the Contract

§ 4.2.1 The Design Consultant will provide administration of the Contract as described in the Contract Documents and will be an Owner's representative during construction until the date the Owner issues the final Certificate for Payment from time to time during the one-year period for correction of Work described in Section 12.2.. The Design Consultant will have authority to act on behalf of the Owner only to the extent provided in the Contract Documents.

AIA Document A201 – 2017. Copyright © 1911, 1915, 1918, 1925, 1937, 1951, 1958, 1961, 1963, 1966, 1970, 1976, 1987, 1997, 2007 and 2017. All rights reserved. "The American Institute of Architects," "American Institute of Architects," "AIA," the AIA Logo, and "AIA Contract Documents" are trademarks of The American Institute of Architects. This document was produced at 15:45:22 CDT on 05/11/2026 under Subscription No.20240042832 which expires on 07/01/2026, is not for resale, is licensed for one-time use only, and may only be used in accordance with the AIA Contract Documents® Terms of Service. To report copyright violations, e-mail docinfo@aiacontracts.com.
User Notes: (69f1008b5f1b2d23ced2487a)

§ 4.2.2 The Design Consultant will visit the site at intervals appropriate to the stage of construction, or as otherwise agreed with the Owner, to become generally familiar with the progress and quality of the portion of the Work completed, and to determine in general if the Work observed is being performed in a manner indicating that the Work, when fully completed, will be in accordance with the Contract Documents. However, the Design Consultant will not be required to make exhaustive or continuous on-site inspections to check the quality or quantity of the Work. The Design Consultant will not have control over, charge of, or responsibility for the construction means, methods, techniques, sequences or procedures, or for the safety precautions and programs in connection with the Work, since these are solely the Contractor's rights and responsibilities under the Contract Documents, unless otherwise modified in writing in accordance with other provisions of the Contract.

§ 4.2.3 On the basis of the site visits, the Design Consultant will keep the Owner reasonably informed about the progress and quality of the portion of the Work completed, and promptly report to the Owner (1) known deviations from the Contract Documents, (2) known deviations from the most recent construction schedule submitted by the Contractor, and (3) defects and deficiencies observed in the Work. The Design Consultant will not be responsible for the Contractor's failure to perform the Work in accordance with the requirements of the Contract Documents. The Design Consultant will not have control over or charge of, and will not be responsible for acts or omissions of, the Contractor, Subcontractors, or their agents or employees, or any other persons or entities performing portions of the Work.

§ 4.2.4 Communications

The Owner and Contractor shall include the Design Consultant in all communications that relate to or affect the Design Consultant's services or professional responsibilities. The Owner shall promptly notify the Design Consultant of the substance of any direct communications between the Owner and the Contractor otherwise relating to the Project. Communications by and with the Design Consultant's consultants shall be through the Design Consultant. Communications by and with Subcontractors and suppliers shall be through the Contractor. Communications by and with Separate Contractors shall be through the Owner. The Contract Documents may specify other communication protocols., Owner's representive should be included in all relevent communications.

§ 4.2.5 Based on the Design Consultant's evaluations of the Contractor's Applications for Payment, the Design Consultant will review and certify the amounts due the Contractor and will issue Certificates for Payment in such amounts.

§ 4.2.6 The Design Consultant has authority to reject Work that does not conform to the Contract Documents. Whenever the Design Consultant considers it necessary or advisable, the Design Consultant will have authority to require inspection or testing of the Work in accordance with Sections 13.4.2 and 13.4.3, whether or not the Work is fabricated, installed or completed. However, neither this authority of the Design Consultant nor a decision made in good faith either to exercise or not to exercise such authority shall give rise to a duty or responsibility of the Design Consultant to the Contractor, Subcontractors, suppliers, their agents or employees, or other persons or entities performing portions of the Work.

§ 4.2.7 The Design Consultant will review and approve, or take other appropriate action upon, the Contractor's submittals such as Shop Drawings, Product Data, and Samples, but only for the limited purpose of checking for conformance with information given and the design concept expressed in the Contract Documents. The Design Consultant's action will be taken in accordance with the submittal schedule approved by the Design Consultant or, in the absence of an approved submittal schedule, with reasonable promptness while allowing sufficient time in the Design Consultant's professional judgment to permit adequate review. Review of such submittals is not conducted for the purpose of determining the accuracy and completeness of other details such as dimensions and quantities, or for substantiating instructions for installation or performance of equipment or systems, all of which remain the responsibility of the Contractor as required by the Contract Documents. The Design Consultant's review of the Contractor's submittals shall not relieve the Contractor of the obligations under Sections 3.3, 3.5, and 3.12. The Design Consultant's review shall not constitute approval of safety precautions or of any construction means, methods, techniques, sequences, or procedures. The Design Consultant's approval of a specific item shall not indicate approval of an assembly of which the item is a component.

§ 4.2.8 The Design Consultant will assist in preparing Change Orders and Construction Change Directives, and may order minor changes in the Work as provided in Section 7.4. The Design Consultant will investigate and make determinations and recommendations regarding concealed and unknown conditions as provided in Section 3.7.4.

AIA Document A201 – 2017. Copyright © 1911, 1915, 1918, 1925, 1937, 1951, 1958, 1961, 1963, 1966, 1970, 1976, 1987, 1997, 2007 and 2017. All rights reserved. "The American Institute of Architects," "American Institute of Architects," "AIA," the AIA Logo, and "AIA Contract Documents" are trademarks of The American Institute of Architects. This document was produced at 15:45:22 CDT on 05/11/2026 under Subscription No.20240042832 which expires on 07/01/2026, is not for resale, is licensed for one-time use only, and may only be used in accordance with the AIA Contract Documents® Terms of Service. To report copyright violations, e-mail docinfo@aiacontracts.com.
User Notes: (69f1008b5f1b2d23ced2487a)

§ 4.2.9 The Design Consultant will conduct inspections to determine the date or dates of Substantial Completion and the date of final completion; issue Certificates of Substantial Completion pursuant to Section 9.8; receive and forward to the Owner, for the Owner's review and records, written warranties and related documents required by the Contract and assembled by the Contractor pursuant to Section 9.10; and issue a final Certificate for Payment pursuant to Section 9.10.

§ 4.2.10 If the Owner and Design Consultant agree, the Design Consultant will provide one or more Project representatives to assist in carrying out the Design Consultant's responsibilities at the site. The Owner shall notify the Contractor of any change in the duties, responsibilities and limitations of authority of the Project representatives.

§ 4.2.11 The Design Consultant will interpret and decide matters concerning performance under, and requirements of, the Contract Documents on written request of either the Owner or Contractor. The Design Consultant's response to such requests will be made in writing within any time limits agreed upon or otherwise with reasonable promptness.

§ 4.2.12 Interpretations and decisions of the Design Consultant will be consistent with the intent of, and reasonably inferable from, the Contract Documents and will be in writing or in the form of drawings. When making such interpretations and decisions, the Design Consultant will endeavor to secure faithful performance by both Owner and Contractor, will not show partiality to either, and will not be liable for results of interpretations or decisions rendered in good faith.

§ 4.2.14 The Design Consultant will review and respond to requests for information about the Contract Documents. The Design Consultant's response to such requests will be made in writing within any time limits agreed upon or otherwise with reasonable promptness. If appropriate, the Design Consultant will prepare and issue supplemental Drawings and Specifications in response to the requests for information.

ARTICLE 5 SUBCONTRACTORS

§ 5.1 Definitions

§ 5.1.1 A Subcontractor is a person or entity who has a direct contract with the Contractor to perform a portion of the Work at the site. The term "Subcontractor" is referred to throughout the Contract Documents as if singular in number and means a Subcontractor or an authorized representative of the Subcontractor. The term "Subcontractor" does not include a Separate Contractor or the subcontractors of a Separate Contractor.

§ 5.1.2 A Sub-subcontractor is a person or entity who has a direct or indirect contract with a Subcontractor to perform a portion of the Work at the site. The term "Sub-subcontractor" is referred to throughout the Contract Documents as if singular in number and means a Sub-subcontractor or an authorized representative of the Sub-subcontractor.

§ 5.2 Award of Subcontracts and Other Contracts for Portions of the Work

§ 5.2.1 Unless otherwise stated in the Contract Documents, the apparent low bidder, within (3) days after bids are opened shall notify the Owner and Design Consultant of the persons or entities proposed for each principal portion of the Work, including those who are to furnish materials or equipment fabricated to a special design. Within 14 days of receipt of the information, the Design Consultant may notify the Contractor whether the Owner or the Design Consultant (1) has reasonable objection to any such proposed person or entity or (2) requires additional time for review. Failure of the Design Consultant to provide notice within the 14-day period shall constitute notice of no reasonable objection.

§ 5.2.2 The Contractor shall not contract with a proposed person or entity to whom the Owner or Design Consultant has made reasonable and timely objection. The Contractor shall not be required to contract with anyone to whom the Contractor has made reasonable objection.

§ 5.2.3 If the Owner or Design Consultant has reasonable objection to a person or entity proposed by the Contractor, the Contractor shall propose another to whom the Owner or Design Consultant has no reasonable objection. If the proposed but rejected Subcontractor was reasonably capable of performing the Work, the Contract Sum and Contract Time shall be increased or decreased by the difference, if any, occasioned by such change, and an appropriate Change Order shall be issued before commencement of the substitute Subcontractor's Work. However, no increase in the Contract Sum or Contract Time shall be allowed for such change unless the Contractor has acted

AIA Document A201 – 2017. Copyright © 1911, 1915, 1918, 1925, 1937, 1951, 1958, 1961, 1963, 1966, 1970, 1976, 1987, 1997, 2007 and 2017. All rights reserved. "The American Institute of Architects," "American Institute of Architects," "AIA," the AIA Logo, and "AIA Contract Documents" are trademarks of The American Institute of Architects. This document was produced at 15:45:22 CDT on 05/11/2026 under Subscription No.20240042832 which expires on 07/01/2026, is not for resale, is licensed for one-time use only, and may only be used in accordance with the AIA Contract Documents® Terms of Service. To report copyright violations, e-mail docinfo@aiacontracts.com.
User Notes: (69f1008b5f1b2d23ced2487a)

promptly and responsively in submitting names as required.

§ 5.2.4 The Contractor shall not substitute a Subcontractor, person, or entity for one previously selected if the Owner or Design Consultant makes reasonable objection to such substitution.

§ 5.3 Subcontractual Relations

By appropriate written agreement, the Contractor shall require each Subcontractor, to the extent of the Work to be performed by the Subcontractor, to be bound to the Contractor by terms of the Contract Documents, and to assume toward the Contractor all the obligations and responsibilities, including the responsibility for safety of the Subcontractor's Work that the Contractor, by these Contract Documents, assumes toward the Owner and Design Consultant. Each subcontract agreement shall preserve and protect the rights of the Owner and Design Consultant under the Contract Documents with respect to the Work to be performed by the Subcontractor so that subcontracting thereof will not prejudice such rights, and shall allow to the Subcontractor, unless specifically provided otherwise in the subcontract agreement, the benefit of all rights, remedies, and redress against the Contractor that the Contractor, by the Contract Documents, has against the Owner. Where appropriate, the Contractor shall require each Subcontractor to enter into similar agreements with Sub-subcontractors. The Contractor shall make available to each proposed Subcontractor, prior to the execution of the subcontract agreement, copies of the Contract Documents to which the Subcontractor will be bound, and, upon written request of the Subcontractor, identify to the Subcontractor terms and conditions of the proposed subcontract agreement that may be at variance with the Contract Documents. Subcontractors will similarly make copies of applicable portions of such documents available to their respective proposed Sub-subcontractors.

§ 5.4 Contingent Assignment of Subcontracts

§ 5.4.1 Each subcontract agreement for a portion of the Work is assigned by the Contractor to the Owner, provided that

.1 assignment is effective only after termination of the Contract by the Owner for cause pursuant to Section 14.2 and only for those subcontract agreements that the Owner accepts by notifying the Subcontractor and Contractor; and

.2 assignment is subject to the prior rights of the surety, if any, obligated under bond relating to the Contract.

When the Owner accepts the assignment of a subcontract agreement, the Owner assumes the Contractor's rights and obligations under the subcontract.

§ 5.4.2 Upon such assignment, if the Work has been suspended for more than 30 days, the Subcontractor's compensation may equitably adjusted for increases in cost resulting from the suspension.

§ 5.4.3 Upon assignment to the Owner under this Section 5.4, the Owner may further assign the subcontract to a successor contractor or other entity. If the Owner assigns the subcontract to a successor contractor or other entity, the Owner shall nevertheless remain legally responsible for all of the successor contractor's obligations under the subcontract.

ARTICLE 6 CONSTRUCTION BY OWNER OR BY SEPARATE CONTRACTORS

§ 6.1 Owner's Right to Perform Construction and to Award Separate Contracts

§ 6.1.1 The term "Separate Contractor(s)" shall mean other contractors retained by the Owner under separate agreements. The Owner reserves the right to perform construction or operations related to the Project with the Owner's own forces, and with Separate Contractors retained under Conditions of the Contract substantially similar to those of this Contract, including those provisions of the Conditions of the Contract related to insurance and waiver of subrogation.

§ 6.1.2 When separate contracts are awarded for different portions of the Project or other construction or operations on the site, the term "Contractor" in the Contract Documents in each case shall mean the Contractor who executes each separate Owner-Contractor Agreement.

§ 6.1.3 The Owner shall provide for coordination of the activities of the Owner's own forces and of each Separate Contractor with the Work of the Contractor, who shall cooperate with them. The Contractor shall participate with any Separate Contractors and the Owner in reviewing their construction schedules. The Contractor shall make any revisions to its construction schedule deemed necessary after a joint review and mutual agreement. The construction

AIA Document A201 – 2017. Copyright © 1911, 1915, 1918, 1925, 1937, 1951, 1958, 1961, 1963, 1966, 1970, 1976, 1987, 1997, 2007 and 2017. All rights reserved. "The American Institute of Architects," "American Institute of Architects," "AIA," the AIA Logo, and "AIA Contract Documents" are trademarks of The American Institute of Architects. This document was produced at 15:45:22 CDT on 05/11/2026 under Subscription No.20240042832 which expires on 07/01/2026, is not for resale, is licensed for one-time use only, and may only be used in accordance with the AIA Contract Documents® Terms of Service. To report copyright violations, e-mail docinfo@aiacontracts.com.
User Notes: (69f1008b5f1b2d23ced2487a)

schedules shall then constitute the schedules to be used by the Contractor, Separate Contractors, and the Owner until subsequently revised.

§ 6.1.4 Unless otherwise provided in the Contract Documents, when the Owner performs construction or operations related to the Project with the Owner's own forces or with Separate Contractors, the Owner or its Separate Contractors shall have the same obligations and rights that the Contractor has under the Conditions of the Contract, including, without excluding others, those stated in Article 3, this Article 6, and Articles 10, 11, and 12.

§ 6.2 Mutual Responsibility

§ 6.2.1 The Contractor shall afford the Owner and Separate Contractors reasonable opportunity for introduction and storage of their materials and equipment and performance of their activities, and shall connect and coordinate the Contractor's construction and operations with theirs as required by the Contract Documents.

§ 6.2.2 If part of the Contractor's Work depends for proper execution or results upon construction or operations by the Owner or a Separate Contractor, the Contractor shall, prior to proceeding with that portion of the Work, promptly notify the Design Consultant of apparent discrepancies or defects in the construction or operations by the Owner or Separate Contractor that would render it unsuitable for proper execution and results of the Contractor's Work. Failure of the Contractor to notify the Design Consultant of apparent discrepancies or defects prior to proceeding with the Work shall constitute an acknowledgment that the Owner's or Separate Contractor's completed or partially completed construction is fit and proper to receive the Contractor's Work. The Contractor shall not be responsible for discrepancies or defects in the construction or operations by the Owner or Separate Contractor that are not apparent.

§ 6.2.3 The Contractor shall reimburse the Owner for costs the Owner incurs that are payable to a Separate Contractor because of the Contractor's delays, improperly timed activities or defective construction. .

§ 6.2.4 The Contractor shall promptly remedy damage that the Contractor wrongfully causes to completed or partially completed construction or to property of the Owner or Separate Contractor as provided in Section 10.2.5.

§ 6.2.5 The Owner and each Separate Contractor shall have the same responsibilities for cutting and patching as are described for the Contractor in Section 3.14.

§ 6.3 Owner's Right to Clean Up

If a dispute arises among the Contractor, Separate Contractors, and the Owner as to the responsibility under their respective contracts for maintaining the premises and surrounding area free from waste materials and rubbish, the Owner may clean up and the Design Consultant will allocate the cost among those responsible.

ARTICLE 7 CHANGES IN THE WORK

§ 7.1 General

§ 7.1.1 Changes in the Work may be accomplished after execution of the Contract, and without invalidating the Contract, by Change Order, subject to review by Owner. Construction Change Directive or order for a minor change in the Work should be used only in emergency situations. Changes in the Work are subject to the limitations stated in this Article 7 and elsewhere in the Contract Documents.

§ 7.1.2 A Change Order shall be based upon agreement among the Owner, Contractor, and Architect. A Construction Change Directive requires agreement by the Owner and Architect and may or may not be agreed to by the Contractor.

1. Changes for matters relatively minor and incidental to the original contract necessitated by unforeseen circumstances arising during the course of the Work.
2. Emergencies arising during the course of the Work of the Contract.
3. Changes or Alterations provided for the original bidding where there is no difference in price on the Change Order from the original best bid on the Alternate.
4. Changes of relatively minor items not contemplated when the plans and specifications were prepared and the Project was bid, which are in the public interest.

AIA Document A201 – 2017. Copyright © 1911, 1915, 1918, 1925, 1937, 1951, 1958, 1961, 1963, 1966, 1970, 1976, 1987, 1997, 2007 and 2017. All rights reserved. "The American Institute of Architects," "American Institute of Architects," "AIA," the AIA Logo, and "AIA Contract Documents" are trademarks of The American Institute of Architects. This document was produced at 15:45:22 CDT on 05/11/2026 under Subscription No.20240042832 which expires on 07/01/2026, is not for resale, is licensed for one-time use only, and may only be used in accordance with the AIA Contract Documents® Terms of Service. To report copyright violations, e-mail docinfo@aiacontracts.com.
User Notes: (69f1008b5f1b2d23ced2487a)

§ 7.1.3 Changes in the Work shall be performed under applicable provisions of the Contract Documents. The Contractor shall proceed promptly with changes in the Work, unless otherwise provided in the Change Order, Construction Change Directive, or order for a minor change in the Work.

§ 7.2 Change Orders

§ 7.2.1 A Change Order is a written instrument signed by the Owner, Contractor, and Design Consultant stating their agreement upon all of the following:

.1 The change in the Work;

.2 The amount of the adjustment, if any, in the Contract Sum; and

.3 The extent of the adjustment, if any, in the Contract Time.

.4 There shall be attached to each Change Order, a signed statement from the Design Consultant containing the following:

A. A statement of what the Change Order covers and who instituted the Change Order and why it is necessary or desired.

B. A statement setting forth the reasons for using the Change Order method rather than taking new competitive bids.

C. A statement that all prices have been reviewed and found reasonable, fair, and equitable and recommending approval of the same.

§ 7.2.2 Change Orders shall only be utilized to the extent they do not violate Title 39, Code of Alabama, 1975, as amended.

§ 7.3 Construction Change Directives

§ 7.3.1 A Construction Change Directive is a written order prepared by the Design Consultant and signed by the Owner and Design Consultant, directing a change in the Work prior to agreement on adjustment, if any, in the Contract Sum or Contract Time, or both. The Owner may by Construction Change Directive, without invalidating the Contract, order changes in the Work within the general scope of the Contract consisting of additions, deletions, or other revisions, the Contract Sum and Contract Time being adjusted accordingly. This is only to be used when necessitated by emergency, and should be followed up with a Change Order and to the extend allowed by Alabama Code Title 39.

§ 7.3.2 A Construction Change Directive shall be used in the absence of total agreement on the terms of a Change Order.

§ 7.3.3 If the Construction Change Directive provides for an adjustment to the Contract Sum, the adjustment shall be based on one of the following methods:

.1 Mutual acceptance of a lump sum properly itemized and supported by sufficient substantiating data to permit evaluation;

.2 Unit prices stated in the Contract Documents or subsequently agreed upon;

.3 Cost to be determined in a manner agreed upon by the parties and a mutually acceptable fixed or percentage fee; or

.4 As provided in Section 7.3.4.

§ 7.3.4 If the Contractor does not respond promptly or disagrees with the method for adjustment in the Contract Sum, the Design Consultant shall determine the adjustment on the basis of reasonable expenditures and savings of those performing the Work attributable to the change, including, in case of an increase in the Contract Sum, an amount for overhead and profit as set forth in the Agreement, or if no such amount is set forth in the Agreement, a reasonable amount. In such case, and also under Section 7.3.3.3, the Contractor shall keep and present, in such form as the Design Consultant may prescribe, an itemized accounting together with appropriate supporting data. Unless otherwise provided in the Contract Documents, costs for the purposes of this Section 7.3.4 shall be limited to the following:

.1 Costs of labor, including applicable payroll taxes, fringe benefits required by agreement or custom, workers' compensation insurance, and other employee costs approved by the Design Consultant;

.2 Costs of materials, supplies, and equipment, including cost of transportation, whether incorporated or consumed;

.3 Rental costs of machinery and equipment, exclusive of hand tools, whether rented from the Contractor or others;

AIA Document A201 – 2017. Copyright © 1911, 1915, 1918, 1925, 1937, 1951, 1958, 1961, 1963, 1966, 1970, 1976, 1987, 1997, 2007 and 2017. All rights reserved. "The American Institute of Architects," "American Institute of Architects," "AIA," the AIA Logo, and "AIA Contract Documents" are trademarks of The American Institute of Architects. This document was produced at 15:45:22 CDT on 05/11/2026 under Subscription No.20240042832 which expires on 07/01/2026, is not for resale, is licensed for one-time use only, and may only be used in accordance with the AIA Contract Documents® Terms of Service. To report copyright violations, e-mail docinfo@aiacontracts.com.
User Notes: (69f1008b5f1b2d23ced2487a)

.4 Costs of premiums for all bonds and insurance, permit fees, and sales, use, or similar taxes, directly related to the change; and

.5 Costs of supervision and field office personnel directly attributable to the change.

§ 7.3.5 If the Contractor disagrees with the adjustment in the Contract Time, the Contractor may make a Claim in accordance with applicable provisions of Article 15.

§ 7.3.6 Upon receipt of a Construction Change Directive, the Contractor shall promptly proceed with the change in the Work involved and advise the Design Consultant of the Contractor's agreement or disagreement with the method, if any, provided in the Construction Change Directive for determining the proposed adjustment in the Contract Sum or Contract Time.

§ 7.3.7 A Construction Change Directive signed by the Contractor indicates the Contractor's agreement therewith, including adjustment in Contract Sum and Contract Time or the method for determining them. Such agreement shall be effective immediately and shall be recorded as a Change Order.

§ 7.3.8 The amount of credit to be allowed by the Contractor to the Owner for a deletion or change that results in a net decrease in the Contract Sum shall be actual net cost as confirmed by the Design Consultant. When both additions and credits covering related Work or substitutions are involved in a change, the allowance for overhead and profit shall be figured on the basis of net increase, if any, with respect to that change.

§ 7.3.9 Pending final determination of the total cost of a Construction Change Directive to the Owner, the Contractor may request payment for Work completed under the Construction Change Directive in Applications for Payment. The Design Consultant will make an interim determination for purposes of monthly certification for payment for those costs and certify for payment the amount that the Design Consultant determines, in the Design Consultant's professional judgment, to be reasonably justified. The Design Consultant's interim determination of cost shall adjust the Contract Sum on the same basis as a Change Order, subject to the right of either party to disagree and assert a Claim in accordance with Article 15.

§ 7.3.10 When the Owner and Contractor agree with a determination made by the Design Consultant concerning the adjustments in the Contract Sum and Contract Time, or otherwise reach agreement upon the adjustments, such agreement shall be effective immediately and the Design Consultant will prepare a Change Order. Change Orders may be issued for all or any part of a Construction Change Directive.

§ 7.4 Minor Changes in the Work

The Design Consultant may order minor changes in the Work that are consistent with the intent of the Contract Documents and do not involve an adjustment in the Contract Sum or an extension of the Contract Time. The Design Consultant's order for minor changes shall be in writing. If the Contractor believes that the proposed minor change in the Work will affect the Contract Sum or Contract Time, the Contractor shall notify the Design Consultant and shall not proceed to implement the change in the Work. If the Contractor performs the Work set forth in the Design Consultant's order for a minor change without prior notice to the Design Consultant that such change will affect the Contract Sum or Contract Time, the Contractor waives any adjustment to the Contract Sum or extension of the Contract Time.

ARTICLE 8 TIME

§ 8.1 Definitions

§ 8.1.1 Unless otherwise provided, Contract Time is the period of time, including authorized adjustments, allotted in the Contract Documents for Substantial Completion of the Work.

§ 8.1.2 The date of commencement of the Work is the date established in the Agreement.

§ 8.1.3 The date of Substantial Completion is the date certified by the Design Consultant in accordance with Section 9.8.

§ 8.1.4 The term "day" as used in the Contract Documents shall mean calendar day unless otherwise specifically defined.

AIA Document A201 – 2017. Copyright © 1911, 1915, 1918, 1925, 1937, 1951, 1958, 1961, 1963, 1966, 1970, 1976, 1987, 1997, 2007 and 2017. All rights reserved. "The American Institute of Architects," "American Institute of Architects," "AIA," the AIA Logo, and "AIA Contract Documents" are trademarks of The American Institute of Architects. This document was produced at 15:45:22 CDT on 05/11/2026 under Subscription No.20240042832 which expires on 07/01/2026, is not for resale, is licensed for one-time use only, and may only be used in accordance with the AIA Contract Documents® Terms of Service. To report copyright violations, e-mail docinfo@aiacontracts.com.
User Notes: (69f1008b5f1b2d23ced2487a)

§ 8.2 Progress and Completion

§ 8.2.1 Time limits stated in the Contract Documents are of the essence of the Contract. By executing the Agreement, the Contractor confirms that the Contract Time is a reasonable period for performing the Work.

§ 8.2.2 The Contractor shall not knowingly, except by agreement or instruction of the Owner in writing, commence the Work prior to the effective date of insurance required to be furnished by the Contractor and Owner.

§ 8.2.3 The Contractor shall proceed expeditiously with adequate forces and shall achieve Substantial Completion within the Contract Time.

§ 8.3 Delays and Extensions of Time

§ 8.3.1 If the Contractor is delayed at any time in the commencement or progress of the Work by (1) an act or neglect of the Owner or Design Consultant, of an employee of either, or of a Separate Contractor; (2) by changes ordered in the Work; (3) by labor disputes, fire, unusual delay in deliveries, unavoidable casualties, adverse weather conditions documented in accordance with Section 15.1.6.2, or other causes beyond the Contractor's control; (4) by delay authorized by the Owner pending mediation and binding dispute resolution; or (5) by other causes that the Contractor asserts, and the Design Consultant determines, justify delay, then the Contract Time shall be extended for such reasonable time as the Design Consultant may determine.

§ 8.3.2 Claims relating to time shall be made in accordance with applicable provisions of Article 15.

§ 8.3.3 This Section 8.3 does not preclude recovery of damages for delay by either party under other provisions of the Contract Documents.

§ 8.4 Liquidated Damages § 8.4.1 Time is the essence of the Contract. Any delay in the completion of the Work as provided for in the Contract Documents will cause inconvenience to the public and loss and damage to the Owner in interest, and in additional administrative, architectural, inspection, and supervision charges. Therefore, a time charge equal to ($250.00) per calendar day will be made against the Contractor for the entire period that any part of the Work remains uncompleted or any required closeout documents are not acceptably submitted for more that (30) days after the time specified for the Substantial Completion of the Work, the amount of which shall be deducted by the Owner, and shall be retained by the Owner out of monies otherwise due the Contractor in the final payment, not as a penalty, but as liquidated damages sustained.

ARTICLE 9 PAYMENTS AND COMPLETION

§ 9.1 Contract Sum

§ 9.1.1 The Contract Sum is stated in the Agreement and, including authorized adjustments, is the total amount payable by the Owner to the Contractor for performance of the Work under the Contract Documents.

§ 9.1.2 If unit prices are stated in the Contract Documents or subsequently agreed upon, and if quantities originally contemplated are materially changed so that application of such unit prices to the actual quantities causes substantial inequity to the Owner or Contractor, the applicable unit prices shall be equitably adjusted, to the extent allowed by Title 39, Code of Alabama 1975 as amended.

§ 9.2 Schedule of Values

Where the Contract is based on a stipulated sum or Guaranteed Maximum Price, the Contractor shall submit a schedule of values to the Design Consultant before the first Application for Payment, allocating the entire Contract Sum to the various portions of the Work. The schedule of values shall be prepared in the form, and supported by the data to substantiate its accuracy, required by the Design Consultant. This schedule, unless objected to by the Design Consultant, shall be used as a basis for reviewing the Contractor's Applications for Payment. Any changes to the schedule of values shall be submitted to the Design Consultant and supported by such data to substantiate its accuracy as the Design Consultant may require, and unless objected to by the Design Consultant, shall be used as a basis for reviewing the Contractor's subsequent Applications for Payment.

§ 9.3 Applications for Payment

§ 9.3.1 The Contractor shall submit to the Design Consultant on the first of each month for Work performed through the 25th of the preceding month, four (4) original, itemized Applications for Payment for Work completed in accordance with the accepted schedule of values, if required under Section 9.2, for completed portions of the Work. The application shall be notarized and supported by all data substantiating the Contractor's right to payment that the

AIA Document A201 – 2017. Copyright © 1911, 1915, 1918, 1925, 1937, 1951, 1958, 1961, 1963, 1966, 1970, 1976, 1987, 1997, 2007 and 2017. All rights reserved. "The American Institute of Architects," "American Institute of Architects," "AIA," the AIA Logo, and "AIA Contract Documents" are trademarks of The American Institute of Architects. This document was produced at 15:45:22 CDT on 05/11/2026 under Subscription No.20240042832 which expires on 07/01/2026, is not for resale, is licensed for one-time use only, and may only be used in accordance with the AIA Contract Documents® Terms of Service. To report copyright violations, e-mail docinfo@aiacontracts.com.
User Notes: (69f1008b5f1b2d23ced2487a)

Owner or Design Consultant require, such copies of requisitions, and releases and waivers of liens from Subcontractors and suppliers, and shall reflect retainage and documents as follows: 1. Until the final payment is made, the Owner shall pay ninety-seven and one half percent (97.5%) of the amount due the Contractor on account of progress payments (note: the 2-1/2% retainage is calculated by withholding the first 5% of the first 50% of the Work completed); and 2. The Contractor shall provide documentation substantiating that test, inspections and approvals for portions of Work included in an Application for Payment and required by the Contract Documents, or by laws, ordinances, rules, regulations or orders of public authorities having jurisdiction were made at the appropriate time.

§ 9.3.1.1 Such applications may include requests for payment on account of changes in the Work, which have been authorized and approved by properly executed Change Order(s).

§ 9.3.1.2 Applications for Payment shall not include requests for payment for portions of the Work for which the Contractor does not intend to pay a Subcontractor or supplier, unless such Work has been performed by others whom the Contractor intends to pay.

§ 9.3.2 Unless otherwise provided in the Contract Documents, payments shall be made on account of materials and equipment delivered and suitably stored at the site for subsequent incorporation in the Work. If approved in advance by the Owner, payment may similarly be made for materials and equipment suitably stored off the site at a location agreed upon in writing. Payment for materials and equipment stored on or off the site shall be conditioned upon compliance by the Contractor with procedures satisfactory to the Owner to establish the Owner's title to such materials and equipment or otherwise protect the Owner's interest, and shall include the costs of applicable insurance, storage, and transportation to the site, for such materials and equipment stored off the site.

§ 9.3.3 The Contractor warrants that title to all Work covered by an Application for Payment will pass to the Owner no later than the time of payment. The Contractor further warrants that upon submittal of an Application for Payment all Work for which Certificates for Payment have been previously issued and payments received from the Owner shall, to the best of the Contractor's knowledge, information, and belief, be free and clear of liens, claims, security interests, or encumbrances, in favor of the Contractor, Subcontractors, suppliers, or other persons or entities that provided labor, materials, and equipment relating to the Work.

§ 9.4 Certificates for Payment

§ 9.4.1 The Design Consultant will, within seven days after receipt of the Contractor's Application for Payment, either (1) issue to the Owner a Certificate for Payment in the full amount of the Application for Payment, with a copy to the Contractor; or (2) issue to the Owner a Certificate for Payment for such amount as the Design Consultant determines is properly due, and notify the Contractor and Owner of the Design Consultant's reasons for withholding certification in part as provided in Section 9.5.1; or (3) withhold certification of the entire Application for Payment, and notify the Contractor and Owner of the Design Consultant's reason for withholding certification in whole as provided in Section 9.5.1.

§ 9.4.2 The issuance of a Certificate for Payment will constitute a representation by the Design Consultant to the Owner, based on the Design Consultant's evaluation of the Work and the data in the Application for Payment, that, to the best of the Design Consultant's knowledge, information, and belief, the Work has progressed to the point indicated, the quality of the Work is in accordance with the Contract Documents, and that the Contractor is entitled to payment in the amount certified. The foregoing representations are subject to an evaluation of the Work for conformance with the Contract Documents upon Substantial Completion, to results of subsequent tests and inspections, to correction of minor deviations from the Contract Documents prior to completion, and to specific qualifications expressed by the Design Consultant. However, the issuance of a Certificate for Payment will not be a representation that the Design Consultant has (1) made exhaustive or continuous on-site inspections to check the quality or quantity of the Work; (2) reviewed construction means, methods, techniques, sequences, or procedures; (3) reviewed copies of requisitions received from Subcontractors and suppliers and other data requested by the Owner to substantiate the Contractor's right to payment; or (4) made examination to ascertain how or for what purpose the Contractor has used money previously paid on account of the Contract Sum.

§ 9.5 Decisions to Withhold Certification

§ 9.5.1 The Design Consultant may withhold a Certificate for Payment in whole or in part, to the extent reasonably necessary to protect the Owner, if in the Design Consultant's opinion the representations to the Owner required by Section 9.4.2 cannot be made. If the Design Consultant is unable to certify payment in the amount of the Application, the Design Consultant will notify the Contractor and Owner as provided in Section 9.4.1. If the

AIA Document A201 – 2017. Copyright © 1911, 1915, 1918, 1925, 1937, 1951, 1958, 1961, 1963, 1966, 1970, 1976, 1987, 1997, 2007 and 2017. All rights reserved. "The American Institute of Architects," "American Institute of Architects," "AIA," the AIA Logo, and "AIA Contract Documents" are trademarks of The American Institute of Architects. This document was produced at 15:45:22 CDT on 05/11/2026 under Subscription No.20240042832 which expires on 07/01/2026, is not for resale, is licensed for one-time use only, and may only be used in accordance with the AIA Contract Documents® Terms of Service. To report copyright violations, e-mail docinfo@aiacontracts.com.
User Notes: (69f1008b5f1b2d23ced2487a)

Contractor and Design Consultant cannot agree on a revised amount, the Design Consultant will promptly issue a Certificate for Payment for the amount for which the Design Consultant is able to make such representations to the Owner. The Design Consultant may also withhold a Certificate for Payment or, because of subsequently discovered evidence, may nullify the whole or a part of a Certificate for Payment previously issued, to such extent as may be necessary in the Design Consultant's opinion to protect the Owner from loss for which the Contractor is responsible, including loss resulting from acts and omissions described in Section 3.3.2, because of

.1 defective Work not remedied;

.2 third party claims filed or reasonable evidence indicating probable filing of such claims, unless security acceptable to the Owner is provided by the Contractor;

.3 failure of the Contractor to make payments properly to Subcontractors or suppliers for labor, materials or equipment;

.4 reasonable evidence that the Work cannot be completed for the unpaid balance of the Contract Sum;

.5 damage to the Owner or a Separate Contractor;

.6 reasonable evidence that the Work will not be completed within the Contract Time, and that the unpaid balance would not be adequate to cover actual or liquidated damages for the anticipated delay; or

.7 repeated failure to carry out the Work in accordance with the Contract Documents.

§ 9.5.2 When either party disputes the Design Consultant's decision regarding a Certificate for Payment under Section 9.5.1, in whole or in part, that party may submit a Claim in accordance with Article 15.

§ 9.5.3 When the reasons for withholding certification are removed, certification will be made for amounts previously withheld.

§ 9.5.4 If the Design Consultant withholds certification for payment under Section 9.5.1.3, the Owner may, at its sole option, issue joint checks to the Contractor and to any Subcontractor or supplier to whom the Contractor failed to make payment for Work properly performed or material or equipment suitably delivered. If the Owner makes payments by joint check, the Owner shall notify the Design Consultant and the Contractor shall reflect such payment on its next Application for Payment.

§ 9.6 Progress Payments

§ 9.6.1 After the Design Consultant has issued a Certificate for Payment, the Owner shall make payment in the manner and within the time provided in the Contract Documents, and shall so notify the Design Consultant.

§ 9.6.2 The Contractor shall pay each Subcontractor, no later than seven days after receipt of payment from the Owner, the amount to which the Subcontractor is entitled, reflecting percentages actually retained from payments to the Contractor on account of the Subcontractor's portion of the Work. The Contractor shall, by appropriate agreement with each Subcontractor, require each Subcontractor to make payments to Sub-subcontractors in a similar manner.

§ 9.6.3 The Design Consultant will, on request, furnish to a Subcontractor, if practicable, information regarding percentages of completion or amounts applied for by the Contractor and action taken thereon by the Design Consultant and Owner on account of portions of the Work done by such Subcontractor.

§ 9.6.4 The Owner has the right to request written evidence from the Contractor that the Contractor has properly paid Subcontractors and suppliers amounts paid by the Owner to the Contractor for subcontracted Work. If the Contractor fails to furnish such evidence within seven days, the Owner shall have the right to contact Subcontractors and suppliers to ascertain whether they have been properly paid. Neither the Owner nor Design Consultant shall have an obligation to pay, or to see to the payment of money to, a Subcontractor or supplier, except as may otherwise be required by law.

§ 9.6.5 The Contractor's payments to suppliers shall be treated in a manner similar to that provided in Sections 9.6.2, 9.6.3 and 9.6.4.

§ 9.6.6 A Certificate for Payment, a progress payment, or partial or entire use or occupancy of the Project by the Owner shall not constitute acceptance of Work not in accordance with the Contract Documents.

AIA Document A201 – 2017. Copyright © 1911, 1915, 1918, 1925, 1937, 1951, 1958, 1961, 1963, 1966, 1970, 1976, 1987, 1997, 2007 and 2017. All rights reserved. "The American Institute of Architects," "American Institute of Architects," "AIA," the AIA Logo, and "AIA Contract Documents" are trademarks of The American Institute of Architects. This document was produced at 15:45:22 CDT on 05/11/2026 under Subscription No.20240042832 which expires on 07/01/2026, is not for resale, is licensed for one-time use only, and may only be used in accordance with the AIA Contract Documents® Terms of Service. To report copyright violations, e-mail docinfo@aiacontracts.com.
User Notes: (69f1008b5f1b2d23ced2487a)

§ 9.6.7 Unless the Contractor provides the Owner with a payment bond in the full penal sum of the Contract Sum, payments received by the Contractor for Work properly performed by Subcontractors or provided by suppliers shall be held by the Contractor for those Subcontractors or suppliers who performed Work or furnished materials, or both, under contract with the Contractor for which payment was made by the Owner. Nothing contained herein shall require money to be placed in a separate account and not commingled with money of the Contractor, create any fiduciary liability or tort liability on the part of the Contractor for breach of trust, or entitle any person or entity to an award of punitive damages against the Contractor for breach of the requirements of this provision.

§ 9.6.8 Provided the Owner has fulfilled its payment obligations under the Contract Documents, the Contractor shall defend and indemnify the Owner from all loss, liability, damage or expense, including reasonable attorney's fees and litigation expenses, arising out of any lien claim or other claim for payment by any Subcontractor or supplier of any tier. Upon receipt of notice of a lien claim or other claim for payment, the Owner shall notify the Contractor. If approved by the applicable court, when required, the Contractor may substitute a surety bond for the property against which the lien or other claim for payment has been asserted.

§ 9.7 Failure of Payment

If the Design Consultant does not issue a Certificate for Payment, through no fault of the Contractor, within seven days after receipt of the Contractor's Application for Payment, or if the Owner does not pay the Contractor within seven days after the date established in the Contract Documents, the amount certified by the Design Consultant or awarded by binding dispute resolution, then the Contractor may, upon seven additional days' notice to the Owner and Design Consultant, stop the Work until payment of the amount owing has been received. The Contract Time shall be extended appropriately and the Contract Sum shall be increased by the amount of the Contractor's reasonable costs of shutdown, delay and start-up, plus interest as provided for in the Contract Documents.

§ 9.8 Substantial Completion

§ 9.8.1 Substantial Completion is the stage in the progress of the Work when the Work or designated portion thereof is sufficiently complete in accordance with the Contract Documents so that the Owner can occupy or utilize the Work for its intended use.

§ 9.8.2 When the Contractor considers that the Work, or a portion thereof which the Owner agrees to accept separately, is substantially complete, the Contractor shall prepare and submit to the Design Consultant a comprehensive list of items to be completed or corrected prior to final payment. Failure to include an item on such list does not alter the responsibility of the Contractor to complete all Work in accordance with the Contract Documents.

§ 9.8.3 Upon receipt of the Contractor's list, the Design Consultant will make an inspection to determine whether the Work or designated portion thereof is substantially complete. If the Design Consultant's inspection discloses any item, whether or not included on the Contractor's list, which is not sufficiently complete in accordance with the Contract Documents so that the Owner can occupy or utilize the Work or designated portion thereof for its intended use, the Contractor shall, before issuance of the Certificate of Substantial Completion, complete or correct such item upon notification by the Design Consultant. In such case, the Contractor shall then submit a request for another inspection by the Design Consultant to determine Substantial Completion.

§ 9.8.4 When the Work or designated portion thereof is substantially complete, the Design Consultant will prepare a Certificate of Substantial Completion that shall establish the date of Substantial Completion; establish responsibilities of the Owner and Contractor for security, maintenance, heat, utilities, damage to the Work and insurance; and fix the time within which the Contractor shall finish all items on the list accompanying the Certificate. Warranties required by the Contract Documents shall commence on the date of Substantial Completion of the Work or designated portion thereof unless otherwise provided in the Certificate of Substantial Completion.

§ 9.8.5 The Certificate of Substantial Completion shall be submitted to the Owner and Contractor for their written acceptance of responsibilities assigned to them in the Certificate. Upon such acceptance, and consent of surety if any, the Owner shall make payment of retainage applying to the Work or designated portion thereof. Such payment shall be adjusted for Work that is incomplete or not in accordance with the requirements of the Contract Documents.

§ 9.9 Partial Occupancy or Use

§ 9.9.1 The Owner may occupy or use any completed or partially completed portion of the Work at any stage when such portion is designated by separate agreement with the Contractor, provided such occupancy or use is consented

AIA Document A201 – 2017. Copyright © 1911, 1915, 1918, 1925, 1937, 1951, 1958, 1961, 1963, 1966, 1970, 1976, 1987, 1997, 2007 and 2017. All rights reserved. "The American Institute of Architects," "American Institute of Architects," "AIA," the AIA Logo, and "AIA Contract Documents" are trademarks of The American Institute of Architects. This document was produced at 15:45:22 CDT on 05/11/2026 under Subscription No.20240042832 which expires on 07/01/2026, is not for resale, is licensed for one-time use only, and may only be used in accordance with the AIA Contract Documents® Terms of Service. To report copyright violations, e-mail docinfo@aiacontracts.com.
User Notes: (69f1008b5f1b2d23ced2487a)

to by the insurer and authorized by public authorities having jurisdiction over the Project. Such partial occupancy or use may commence whether or not the portion is substantially complete, provided the Owner and Contractor have accepted in writing the responsibilities assigned to each of them for payments, retainage, if any, security, maintenance, heat, utilities, damage to the Work and insurance, and have agreed in writing concerning the period for correction of the Work and commencement of warranties required by the Contract Documents. When the Contractor considers a portion substantially complete, the Contractor shall prepare and submit a list to the Design Consultant as provided under Section 9.8.2. Consent of the Contractor to partial occupancy or use shall not be unreasonably withheld. The stage of the progress of the Work shall be determined by written agreement between the Owner and Contractor or, if no agreement is reached, by decision of the Design Consultant.

§ 9.9.2 Immediately prior to such partial occupancy or use, the Owner, Contractor, and Design Consultant shall jointly inspect the area to be occupied or portion of the Work to be used in order to determine and record the condition of the Work.

§ 9.9.3 Unless otherwise agreed upon, partial occupancy or use of a portion or portions of the Work shall not constitute acceptance of Work not complying with the requirements of the Contract Documents.

§ 9.10 Final Completion and Final Payment

§ 9.10.1 Upon receipt of the Contractor's notice that the Work is ready for final inspection and acceptance and upon receipt of a final Application for Payment, the Design Consultant will promptly make such inspection. When the Design Consultant finds the Work acceptable under the Contract Documents and the Contract fully performed, the Design Consultant will promptly issue a final Certificate for Payment stating that to the best of the Design Consultant's knowledge, information and belief, and on the basis of the Design Consultant's on-site visits and inspections, the Work has been completed in accordance with the Contract Documents and that the entire balance found to be due the Contractor and noted in the final Certificate is due and payable. The Design Consultant's final Certificate for Payment will constitute a further representation that conditions listed in Section 9.10.2 as precedent to the Contractor's being entitled to final payment have been fulfilled.

§ 9.10.2 Neither final payment nor any remaining retained percentage shall become due until the Contractor submits to the Design Consultant (1) an affidavit that payrolls, bills for materials and equipment, and other indebtedness connected with the Work for which the Owner or the Owner's property might be responsible or encumbered (less amounts withheld by Owner) have been paid or otherwise satisfied, (2) a certificate evidencing that insurance required by the Contract Documents to remain in force after final payment is currently in effect, (3) a written statement that the Contractor knows of no reason that the insurance will not be renewable to cover the period required by the Contract Documents, (4) consent of surety, if any, to final payment, (5) Contractors Affidavit of Release of Liens, (6) separate Releases or Waivers of Liens from Subcontractors and material and equipment suppliers, (7) written warranty on Contractor's letterhead covering materials and labor for one-year, and (8) the advertisement of completion. The Contractor shall provide proof of publication of Advertisement of completion in a local newspaper for three (3) consecutive weeks, as required in Title 39, Section 39-1-1, Subsection (f), of the Code of Alabama. The final 2.5% retained will not be paid until proof of publication is submitted and all written claims paid in full.This advertisement shall not begin until the City of Mobile has accepted the Project and other data establishing payment or satisfaction of obligations, such as receipts and releases and waivers of liens, claims, security interests, or encumbrances arising out of the Contract, to the extent and in such form as may be designated by the Owner.

§ 9.10.3 If, after Substantial Completion of the Work, final completion thereof is materially delayed through no fault of the Contractor or by issuance of Change Orders affecting final completion, and the Design Consultant so confirms, the Owner shall, upon application by the Contractor and certification by the Design Consultant, and without terminating the Contract, make payment of the balance due for that portion of the Work fully completed, corrected, and accepted. If the remaining balance for Work not fully completed or corrected is less than retainage stipulated in the Contract Documents, and if bonds have been furnished, the written consent of the surety to payment of the balance due for that portion of the Work fully completed and accepted shall be submitted by the Contractor to the Design Consultant prior to certification of such payment. Such payment shall be made under terms and conditions governing final payment, except that it shall not constitute a waiver of Claims.

§ 9.10.4 The making of final payment shall constitute a waiver of Claims by the Owner except those arising from

- **.1** liens, Claims, security interests, or encumbrances arising out of the Contract and unsettled;
- **.2** failure of the Work to comply with the requirements of the Contract Documents;

AIA Document A201 – 2017. Copyright © 1911, 1915, 1918, 1925, 1937, 1951, 1958, 1961, 1963, 1966, 1970, 1976, 1987, 1997, 2007 and 2017. All rights reserved. "The American Institute of Architects," "American Institute of Architects," "AIA," the AIA Logo, and "AIA Contract Documents" are trademarks of The American Institute of Architects. This document was produced at 15:45:22 CDT on 05/11/2026 under Subscription No.20240042832 which expires on 07/01/2026, is not for resale, is licensed for one-time use only, and may only be used in accordance with the AIA Contract Documents® Terms of Service. To report copyright violations, e-mail docinfo@aiacontracts.com.
User Notes: (69f1008b5f1b2d23ced2487a)

.3 terms of special warranties required by the Contract Documents; or

.4 audits performed by the Owner, if permitted by the Contract Documents, after final payment.

§ 9.10.5 Acceptance of final payment by the Contractor, a Subcontractor, or a supplier, shall constitute a waiver of claims by that payee except those previously made in writing and identified by that payee as unsettled at the time of final Application for Payment.

ARTICLE 10 PROTECTION OF PERSONS AND PROPERTY

§ 10.1 Safety Precautions and Programs

The Contractor shall be responsible for initiating, maintaining, and supervising all safety precautions and programs in connection with the performance of the Contract.

§ 10.2 Safety of Persons and Property

§ 10.2.1 The Contractor shall comply with all Federal, State, and Local law regarding safety including the requirements of the Occupational Safety and Health Act of 1970, Public Law #91-596, latest version. Contractor shall take all other reasonable precautions for safety of, and shall provide reasonable protection to prevent damage, injury, or loss to

.1 employees on the Work and other persons who may be affected thereby;

.2 the Work and materials and equipment to be incorporated therein, whether in storage on or off the site, under care, custody, or control of the Contractor, a Subcontractor, or a Sub-subcontractor; and

.3 other property at the site or adjacent thereto, such as trees, shrubs, lawns, walks, pavements, roadways, structures, and utilities not designated for removal, relocation, or replacement in the course of construction.

.4 the Contractor shall be responsible for damage done to buried cables and other utilities by its equipment and shall contact the appropriate offices prior to construction for information depth, etc., of utilities in the area.

§ 10.2.2 The Contractor shall comply with, and give notices required by applicable laws, statutes, ordinances, codes, rules and regulations, and lawful orders of public authorities, bearing on safety of persons or property or their protection from damage, injury, or loss.

§ 10.2.3 The Contractor shall implement, erect, and maintain, as required by existing conditions and performance of the Contract, reasonable safeguards for safety and protection, including posting danger signs and other warnings against hazards; promulgating safety regulations; and notifying the owners and users of adjacent sites and utilities of the safeguards.

§ 10.2.4 When use or storage of explosives or other hazardous materials or equipment, or unusual methods are necessary for execution of the Work, the Contractor shall exercise utmost care and carry on such activities under supervision of properly qualified personnel.

§ 10.2.5 The Contractor shall promptly remedy damage and loss (other than damage or loss insured under property insurance required by the Contract Documents) to property referred to in Sections 10.2.1.2 and 10.2.1.3 caused in whole or in part by the Contractor, a Subcontractor, a Sub-subcontractor, or anyone directly or indirectly employed by any of them, or by anyone for whose acts they may be liable and for which the Contractor is responsible under Sections 10.2.1.2 and 10.2.1.3. The Contractor may make a Claim for the cost to remedy the damage or loss to the extent such damage or loss is attributable to acts or omissions of the Owner or Design Consultant or anyone directly or indirectly employed by either of them, or by anyone for whose acts either of them may be liable, and not attributable to the fault or negligence of the Contractor. The foregoing obligations of the Contractor are in addition to the Contractor's obligations under Section 3.18.

§ 10.2.6 The Contractor shall designate a responsible member of the Contractor's organization at the site whose duty shall be the prevention of accidents. This person shall be the Contractor's superintendent unless otherwise designated by the Contractor in writing to the Owner and Design Consultant.

§ 10.2.7 The Contractor shall not permit any part of the construction or site to be loaded so as to cause damage or create an unsafe condition.

AIA Document A201 – 2017. Copyright © 1911, 1915, 1918, 1925, 1937, 1951, 1958, 1961, 1963, 1966, 1970, 1976, 1987, 1997, 2007 and 2017. All rights reserved. "The American Institute of Architects," "American Institute of Architects," "AIA," the AIA Logo, and "AIA Contract Documents" are trademarks of The American Institute of Architects. This document was produced at 15:45:22 CDT on 05/11/2026 under Subscription No.20240042832 which expires on 07/01/2026, is not for resale, is licensed for one-time use only, and may only be used in accordance with the AIA Contract Documents® Terms of Service. To report copyright violations, e-mail docinfo@aiacontracts.com.
User Notes: (69f1008b5f1b2d23ced2487a)

§ 10.2.8 Injury or Damage to Person or Property

If either party suffers injury or damage to person or property because of an act or omission of the other party, or of others for whose acts such party is legally responsible, notice of the injury or damage, whether or not insured, shall be given to the other party within a reasonable time not exceeding 21 days after discovery. The notice shall provide sufficient detail to enable the other party to investigate the matter.

§ 10.3 Hazardous Materials and Substances

§ 10.3.1 The Contractor is responsible for compliance with any requirements included in the Contract Documents regarding hazardous materials or substances. If the Contractor encounters a hazardous material or substance not addressed in the Contract Documents and if reasonable precautions will be inadequate to prevent foreseeable bodily injury or death to persons resulting from a material or substance, including but not limited to asbestos or polychlorinated biphenyl (PCB), encountered on the site by the Contractor, the Contractor shall, upon recognizing the condition, immediately stop Work in the affected area and notify the Owner and Design Consultant of the condition.

§ 10.3.2 Upon receipt of the Contractor's notice, the Owner shall obtain the services of a licensed laboratory to verify the presence or absence of the material or substance reported by the Contractor and, in the event such material or substance is found to be present, to cause it to be rendered harmless. Unless otherwise required by the Contract Documents, the Owner shall furnish in writing to the Contractor and Design Consultant the names and qualifications of persons or entities who are to perform tests verifying the presence or absence of the material or substance or who are to perform the task of removal or safe containment of the material or substance. The Contractor and the Design Consultant will promptly reply to the Owner in writing stating whether or not either has reasonable objection to the persons or entities proposed by the Owner. If either the Contractor or Design Consultant has an objection to a person or entity proposed by the Owner, the Owner shall propose another to whom the Contractor and the Design Consultant have no reasonable objection. When the material or substance has been rendered harmless, Work in the affected area shall resume upon written agreement of the Owner and Contractor. By Change Order, the Contract Time shall be extended appropriately and the Contract Sum shall be increased by the amount of the Contractor's reasonable additional costs of shutdown, delay, and start-up.

§ 10.3.4 The Owner shall not be responsible under this Section 10.3 for hazardous materials or substances the Contractor brings to the site materials or substances brought to the site by the Contractor regardless of whether such materials or substances were required by the Contract Documents

§ 10.3.5 The Contractor shall reimburse the Owner for the cost and expense the Owner incurs (1) for remediation of hazardous materials or substances the Contractor brings to the site and negligently handles, or (2) where the Contractor fails to perform its obligations under Section 10.3.1, except to the extent that the cost and expense are due to the Owner's fault or negligence.

§ 10.3.6 If, without negligence on the part of the Contractor, the Contractor is held liable by a government agency for the cost of remediation of a hazardous material or substance solely by reason of performing Work as required by the Contract Documents, the Owner shall reimburse the Contractor for all cost and expense thereby incurred.

§ 10.4 Emergencies

In an emergency affecting safety of persons or property, the Contractor shall act, at the Contractor's discretion, to prevent threatened damage, injury, or loss. Additional compensation or extension of time claimed by the Contractor on account of an emergency shall be determined as provided in Article 15 and Article 7.

ARTICLE 11 INSURANCE AND BONDS

§ 11.1 Contractor's Insurance and Bonds

§ 11.1.1 The Contractor shall purchase and maintain insurance of the types and limits of liability, containing the endorsements, and subject to the terms and conditions, as described in the Agreement or elsewhere in the Contract Documents. The Contractor shall purchase and maintain the required insurance from an insurance company or insurance companies lawfully authorized to issue insurance in the jurisdiction where the Project is located. The Owner, Design Consultant, and Design Consultant's consultants shall be named as additional insureds under the Contractor's commercial general liability policy or as otherwise described in the Contract Documents.

AIA Document A201 – 2017. Copyright © 1911, 1915, 1918, 1925, 1937, 1951, 1958, 1961, 1963, 1966, 1970, 1976, 1987, 1997, 2007 and 2017. All rights reserved. "The American Institute of Architects," "American Institute of Architects," "AIA," the AIA Logo, and "AIA Contract Documents" are trademarks of The American Institute of Architects. This document was produced at 15:45:22 CDT on 05/11/2026 under Subscription No.20240042832 which expires on 07/01/2026, is not for resale, is licensed for one-time use only, and may only be used in accordance with the AIA Contract Documents® Terms of Service. To report copyright violations, e-mail docinfo@aiacontracts.com.
User Notes: (69f1008b5f1b2d23ced2487a)

§ 11.1.2 The Contractor shall provide surety bonds of the types, for such penal sums, and subject to such terms and conditions as required by the Contract Documents. The Contractor shall purchase and maintain the required bonds from a company or companies lawfully authorized to issue surety bonds in the jurisdiction where the Project is located.

§ 11.1.3 Upon the request of any person or entity appearing to be a potential beneficiary of bonds covering payment of obligations arising under the Contract, the Contractor shall promptly furnish a copy of the bonds or shall authorize a copy to be furnished.

§ 11.1.4 Notice of Cancellation or Expiration of Contractor's Required Insurance. Within three (3) business days of the date the Contractor becomes aware of an impending or actual cancellation or expiration of any insurance required by the Contract Documents, the Contractor shall provide notice to the Owner of such impending or actual cancellation or expiration. Upon receipt of notice from the Contractor, the Owner shall, unless the lapse in coverage arises from an act or omission of the Owner, have the right to stop the Work until the lapse in coverage has been cured by the procurement of replacement coverage by the Contractor. The furnishing of notice by the Contractor shall not relieve the Contractor of any contractual obligation to provide any required coverage.

ARTICLE 12 UNCOVERING AND CORRECTION OF WORK

§ 12.1 Uncovering of Work

§ 12.1.1 If a portion of the Work is covered contrary to the Design Consultant's request or to requirements specifically expressed in the Contract Documents, it must, if requested in writing by the Design Consultant, be uncovered for the Design Consultant's examination and be replaced at the Contractor's expense without change in the Contract Time.

§ 12.1.2 If a portion of the Work has been covered that the Design Consultant has not specifically requested to examine prior to its being covered, the Design Consultant may request to see such Work and it shall be uncovered by the Contractor. If such Work is in accordance with the Contract Documents, the Contractor shall be entitled to an equitable adjustment to the Contract Sum and Contract Time as may be appropriate. If such Work is not in accordance with the Contract Documents, the costs of uncovering the Work, and the cost of correction, shall be at the Contractor's expense.

§ 12.2 Correction of Work

§ 12.2.1 Before Substantial Completion

The Contractor shall promptly correct Work rejected by the Design Consultant or failing to conform to the requirements of the Contract Documents, discovered before Substantial Completion and whether or not fabricated, installed or completed. Costs of correcting such rejected Work, including additional testing and inspections, the cost of uncovering and replacement, and compensation for the Design Consultant's services and expenses made necessary thereby, shall be at the Contractor's expense.

§ 12.2.2 After Substantial Completion

§ 12.2.2.1 In addition to the Contractor's obligations under Section 3.5, if, within one year after the date of Substantial Completion of the Work or designated portion thereof or after the date for commencement of warranties established under Section 9.9.1, or by terms of any applicable special warranty required by the Contract Documents, any of the Work is found to be not in accordance with the requirements of the Contract Documents, the Contractor shall correct it promptly after receipt of notice from the Owner to do so, unless the Owner has previously given the Contractor a written acceptance of such condition. The Owner shall give such notice promptly after discovery of the condition. During the one-year period for correction of Work, if the Owner fails to notify the Contractor and give the Contractor an opportunity to make the correction, the Owner waives the rights to require correction by the Contractor and to make a claim for breach of warranty. If the Contractor fails to correct nonconforming Work within a reasonable time during that period after receipt of notice from the Owner or Design Consultant, the Owner may

AIA Document A201 – 2017. Copyright © 1911, 1915, 1918, 1925, 1937, 1951, 1958, 1961, 1963, 1966, 1970, 1976, 1987, 1997, 2007 and 2017. All rights reserved. "The American Institute of Architects," "American Institute of Architects," "AIA," the AIA Logo, and "AIA Contract Documents" are trademarks of The American Institute of Architects. This document was produced at 15:45:22 CDT on 05/11/2026 under Subscription No.20240042832 which expires on 07/01/2026, is not for resale, is licensed for one-time use only, and may only be used in accordance with the AIA Contract Documents® Terms of Service. To report copyright violations, e-mail docinfo@aiacontracts.com.
User Notes: (69f1008b5f1b2d23ced2487a)

correct it in accordance with Section 2.5.

§ 12.2.2.2 The one-year period for correction of Work shall be extended with respect to portions of Work first performed after Substantial Completion by the period of time between Substantial Completion and the actual completion of that portion of the Work.

§ 12.2.2.3 The one-year period for correction of Work shall not be extended by corrective Work performed by the Contractor pursuant to this Section 12.2.

§ 12.2.3 The Contractor shall remove from the site portions of the Work that are not in accordance with the requirements of the Contract Documents and are neither corrected by the Contractor nor accepted by the Owner.

§ 12.2.4 The Contractor shall bear the cost of correcting destroyed or damaged construction of the Owner or Separate Contractors, whether completed or partially completed, caused by the Contractor's correction or removal of Work that is not in accordance with the requirements of the Contract Documents.

§ 12.2.5 Nothing contained in this Section 12.2 shall be construed to establish a period of limitation with respect to other obligations the Contractor has under the Contract Documents. Establishment of the one-year period for correction of Work as described in Section 12.2.2 relates only to the specific obligation of the Contractor to correct the Work, and has no relationship to the time within which the obligation to comply with the Contract Documents may be sought to be enforced, nor to the time within which proceedings may be commenced to establish the Contractor's liability with respect to the Contractor's obligations other than specifically to correct the Work.

§ 12.3 Acceptance of Nonconforming Work

If the Owner prefers to accept Work that is not in accordance with the requirements of the Contract Documents, the Owner may do so instead of requiring its removal and correction, in which case the Contract Sum will be reduced as appropriate and equitable. Such adjustment shall be effected whether or not final payment has been made.

ARTICLE 13 MISCELLANEOUS PROVISIONS

§ 13.1 Governing Law

The Contract shall be governed by the law of the State of Alabama and Jurisdiction shall be in Mobile County or Southern District of Alabama.

§ 13.2 Successors and Assigns

§ 13.2.1 The Owner and Contractor respectively bind themselves, their partners, successors, assigns, and legal representatives to covenants, agreements, and obligations contained in the Contract Documents. Except as provided in Section 13.2.2, neither party to the Contract shall assign the Contract as a whole without written consent of the other. If either party attempts to make an assignment without such consent, that party shall nevertheless remain legally responsible for all obligations under the Contract.

§ 13.2.2 The Owner may, without consent of the Contractor, assign the Contract to a lender providing construction financing for the Project, if the lender assumes the Owner's rights and obligations under the Contract Documents. The Contractor shall execute all consents reasonably required to facilitate the assignment.
§13.2.3 No assignment of the Contract shall be made without the written permission of Surety providing bonding and the City of Mobile.

§ 13.3 Rights and Remedies

§ 13.3.1 Duties and obligations imposed by the Contract Documents and rights and remedies available thereunder shall be in addition to and not a limitation of duties, obligations, rights, and remedies otherwise imposed or available by law.

§ 13.3.2 No action or failure to act by the Owner, Design Consultant, or Contractor shall constitute a waiver of a right or duty afforded them under the Contract, nor shall such action or failure to act constitute approval of or acquiescence in a breach thereunder, except as may be specifically agreed upon in writing.

AIA Document A201 – 2017. Copyright © 1911, 1915, 1918, 1925, 1937, 1951, 1958, 1961, 1963, 1966, 1970, 1976, 1987, 1997, 2007 and 2017. All rights reserved. "The American Institute of Architects," "American Institute of Architects," "AIA," the AIA Logo, and "AIA Contract Documents" are trademarks of The American Institute of Architects. This document was produced at 15:45:22 CDT on 05/11/2026 under Subscription No.20240042832 which expires on 07/01/2026, is not for resale, is licensed for one-time use only, and may only be used in accordance with the AIA Contract Documents® Terms of Service. To report copyright violations, e-mail docinfo@aiacontracts.com.
User Notes: (69f1008b5f1b2d23ced2487a)

§ 13.4 Tests and Inspections

§ 13.4.1 Tests, inspections, and approvals of portions of the Work shall be made as required by the Contract Documents and by applicable laws, statutes, ordinances, codes, rules, and regulations or lawful orders of public authorities. Unless otherwise provided, the Contractor shall make arrangements for such tests, inspections, and approvals with an independent testing laboratory or entity acceptable to the Owner, or with the appropriate public authority, and shall bear all related costs of tests, inspections, and approvals. The Contractor shall give the Design Consultant timely notice of when and where tests and inspections are to be made so that the Design Consultant may be present for such procedures. The Owner shall bear costs of tests, inspections, or approvals that do not become requirements until after bids are received or negotiations concluded. The Owner shall directly arrange and pay for tests, inspections, or approvals where building codes or applicable laws or regulations so require.

§ 13.4.2 If the Design Consultant, Owner, or public authorities having jurisdiction determine that portions of the Work require additional testing, inspection, or approval not included under Section 13.4.1, the Design Consultant will, upon written authorization from the Owner, instruct the Contractor to make arrangements for such additional testing, inspection, or approval, by an entity acceptable to the Owner, and the Contractor shall give timely notice to the Design Consultant of when and where tests and inspections are to be made so that the Design Consultant may be present for such procedures. Such costs, except as provided in Section 13.4.3, shall be at the Owner's expense.

§ 13.4.3 If procedures for testing, inspection, or approval under Sections 13.4.1 and 13.4.2 reveal failure of the portions of the Work to comply with requirements established by the Contract Documents, all costs made necessary by such failure, including those of repeated procedures and compensation for the Design Consultant's services and expenses, shall be at the Contractor's expense.

§ 13.4.4 Required certificates of testing, inspection, or approval shall, unless otherwise required by the Contract Documents, be secured by the Contractor and promptly delivered to the Design Consultant.

§ 13.4.5 If the Design Consultant is to observe tests, inspections, or approvals required by the Contract Documents, the Design Consultant will do so promptly and, where practicable, at the normal place of testing.

§ 13.4.6 Tests or inspections conducted pursuant to the Contract Documents shall be made promptly to avoid unreasonable delay in the Work.

§ 13.4.7 Test, inspections or approvals made in addition to the Design Consultant's normal design and contract administration services caused by the Contractor shall be paid for by the Contractor. The normal service schedule is contained in Article 2.8.1 of AIA B102-2017 as amended by the Owner and is available to Contractor on request.
§ 13.4.8 The Contractor must call BUILD MOBILE for inspections and approval at the times required by the Ciyt requirements, as well as notify the Design Consultant, Consulting Engineer, and/or Test Laboratory, for inspection and approval of sub-grade conditions, under slab and footing conditions, vapor barrier placement, reinforcing steel placement, all structural connections, electrical, mechanical, etc. None of the above will be accepted that have been covered up before receiving approval of the Design Consultant or his Consultant.

ARTICLE 14 TERMINATION OR SUSPENSION OF THE CONTRACT

§ 14.1 Termination by the Contractor

§ 14.1.1 The Contractor may terminate the Contract if the Work is stopped for a period of 30 consecutive days through no act or fault of the Contractor, a Subcontractor, a Sub-subcontractor, their agents or employees, or any other persons or entities performing portions of the Work, for any of the following reasons:

- **.1** Issuance of an order of a court or other public authority having jurisdiction that requires all Work to be stopped;
- **.2** An act of government, such as a declaration of national emergency, that requires all Work to be stopped;
- **.3** Because the Design Consultant has not issued a Certificate for Payment and has not notified the Contractor of the reason for withholding certification as provided in Section 9.4.1, or because the Owner has not made payment on a Certificate for Payment within the time stated in the Contract Documents; or
- **.4** The Owner has failed to furnish to the Contractor reasonable evidence as required by Section 2.2.

AIA Document A201 – 2017. Copyright © 1911, 1915, 1918, 1925, 1937, 1951, 1958, 1961, 1963, 1966, 1970, 1976, 1987, 1997, 2007 and 2017. All rights reserved. "The American Institute of Architects," "American Institute of Architects," "AIA," the AIA Logo, and "AIA Contract Documents" are trademarks of The American Institute of Architects. This document was produced at 15:45:22 CDT on 05/11/2026 under Subscription No.20240042832 which expires on 07/01/2026, is not for resale, is licensed for one-time use only, and may only be used in accordance with the AIA Contract Documents® Terms of Service. To report copyright violations, e-mail docinfo@aiacontracts.com.
User Notes: (69f1008b5f1b2d23ced2487a)

§ 14.1.2 The Contractor may terminate the Contract if, through no act or fault of the Contractor, a Subcontractor, a Sub-subcontractor, their agents or employees, or any other persons or entities performing portions of the Work, repeated suspensions, delays, or interruptions of the entire Work by the Owner as described in Section 14.3, constitute in the aggregate more than 100 percent of the total number of days scheduled for completion, or 120 days in any 365-day period, whichever is less.

§ 14.1.3 If one of the reasons described in Section 14.1.1 or 14.1.2 exists, the Contractor may, upon seven days' notice to the Owner and Design Consultant, terminate the Contract and recover from the Owner payment for Work executed, as well as reasonable overhead and profit on Work not executed, and costs incurred by reason of such termination.

§ 14.1.4 If the Work is stopped for a period of 60 consecutive days through no act or fault of the Contractor, a Subcontractor, a Sub-subcontractor, or their agents or employees or any other persons or entities performing portions of the Work because the Owner has repeatedly failed to fulfill the Owner's obligations under the Contract Documents with respect to matters important to the progress of the Work, the Contractor may, upon seven additional days' notice to the Owner and the Design Consultant, terminate the Contract and recover from the Owner as provided in Section 14.1.3.

§ 14.2 Termination by the Owner for Cause

§ 14.2.1 The Owner may terminate the Contract if the Contractor

- **.1** repeatedly refuses or fails to supply enough properly skilled workers or proper materials;
- **.2** fails to make payment to Subcontractors or suppliers in accordance with the respective agreements between the Contractor and the Subcontractors or suppliers;
- **.3** repeatedly disregards applicable laws, statutes, ordinances, codes, rules and regulations, or lawful orders of a public authority; or
- **.4** otherwise is guilty of substantial breach of a provision of the Contract Documents.

§ 14.2.2 When any of the reasons described in Section 14.2.1 exist, and upon certification by the Design Consultant that sufficient cause exists to justify such action, the Owner may, without prejudice to any other rights or remedies of the Owner and after giving the Contractor and the Contractor's surety, if any, seven days' notice, terminate employment of the Contractor and may, subject to any prior rights of the surety:

- **.1** Exclude the Contractor from the site and take possession of all materials, equipment, tools, and construction equipment and machinery thereon owned by the Contractor;
- **.2** Accept assignment of subcontracts pursuant to Section 5.4; and
- **.3** Finish the Work by whatever reasonable method the Owner may deem expedient. Upon written request of the Contractor, the Owner shall furnish to the Contractor a detailed accounting of the costs incurred by the Owner in finishing the Work.

§ 14.2.3 When the Owner terminates the Contract for one of the reasons stated in Section 14.2.1, the Contractor shall not be entitled to receive further payment until the Work is finished.

§ 14.2.4 If the unpaid balance of the Contract Sum exceeds costs of finishing the Work, including compensation for the Design Consultant's services and expenses made necessary thereby, and other damages incurred by the Owner and not expressly waived, such excess shall be paid to the Contractor. If such costs and damages exceed the unpaid balance, the Contractor shall pay the difference to the Owner. The amount to be paid to the Contractor or Owner, as the case may be, shall be certified by the Initial Decision Maker, upon application, and this obligation for payment shall survive termination of the Contract.

§ 14.3 Suspension by the Owner for Convenience

§ 14.3.1 The Owner may, without cause, order the Contractor in writing to suspend, delay or interrupt the Work, in whole or in part for such period of time as the Owner may determine.

§ 14.3.2 The Contract Sum and Contract Time shall be adjusted for increases in the cost and time caused by suspension, delay, or interruption under Section 14.3.1. Adjustment of the Contract Sum shall include profit. No adjustment shall be made to the extent

AIA Document A201 – 2017. Copyright © 1911, 1915, 1918, 1925, 1937, 1951, 1958, 1961, 1963, 1966, 1970, 1976, 1987, 1997, 2007 and 2017. All rights reserved. "The American Institute of Architects," "American Institute of Architects," "AIA," the AIA Logo, and "AIA Contract Documents" are trademarks of The American Institute of Architects. This document was produced at 15:45:22 CDT on 05/11/2026 under Subscription No.20240042832 which expires on 07/01/2026, is not for resale, is licensed for one-time use only, and may only be used in accordance with the AIA Contract Documents® Terms of Service. To report copyright violations, e-mail docinfo@aiacontracts.com.
User Notes: (69f1008b5f1b2d23ced2487a)

.1 that performance is, was, or would have been, so suspended, delayed, or interrupted, by another cause for which the Contractor is responsible; or

.2 that an equitable adjustment is made or denied under another provision of the Contract.

§ 14.4 Termination by the Owner for Convenience

§ 14.4.1 The Owner may, at any time, terminate the Contract for the Owner's convenience and without cause.

§ 14.4.2 Upon receipt of notice from the Owner of such termination for the Owner's convenience, the Contractor shall

.1 cease operations as directed by the Owner in the notice;

.2 take actions necessary, or that the Owner may direct, for the protection and preservation of the Work; and

.3 except for Work directed to be performed prior to the effective date of termination stated in the notice, terminate all existing subcontracts and purchase orders and enter into no further subcontracts and purchase orders.

§ 14.4.3 In case of such termination for the Owner's convenience, the Owner shall pay the Contractor for Work properly executed; costs incurred by reason of the termination, including costs attributable to termination of Subcontracts; and the termination fee, if any, set forth in the Agreement.

ARTICLE 15 CLAIMS AND DISPUTES

§ 15.1 Claims

§ 15.1.1 Definition

A Claim is a demand or assertion by one of the parties seeking, as a matter of right, payment of money, a change in the Contract Time, or other relief with respect to the terms of the Contract. The term "Claim" also includes other disputes and matters in question between the Owner and Contractor arising out of or relating to the Contract. The responsibility to substantiate Claims shall rest with the party making the Claim. This Section 15.1.1 does not require the Owner to file a Claim in order to impose liquidated damages in accordance with the Contract Documents.

§ 15.1.2 Time Limits on Claims

Shall be governed by applicable Alabama State Law.

§ 15.1.3 Notice of Claims

§ 15.1.3.1 Claims by either the Owner or Contractor, where the condition giving rise to the Claim is first discovered prior to expiration of the period for correction of the Work set forth in Section 12.2.2, shall be initiated by notice to the other party and to the Initial Decision Maker with a copy sent to the Design Consultant, if the Design Consultant is not serving as the Initial Decision Maker. Claims by either party under this Section 15.1.3.1 shall be initiated within 21 days after occurrence of the event giving rise to such Claim or within 21 days after the claimant first recognizes the condition giving rise to the Claim, whichever is later. Claims must be initiated by written notice to the Design Consultant and the other party.

§ 15.1.3.2 Claims by either the Owner or Contractor, where the condition giving rise to the Claim is first discovered after expiration of the period for correction of the Work set forth in Section 12.2.2, shall be initiated by notice to the other party. In such event, no decision by the Initial Decision Maker is required.

§ 15.1.4 Continuing Contract Performance

§ 15.1.4.1 Pending final resolution of a Claim, except as otherwise agreed in writing or as provided in Section 9.7 and Article 14, the Contractor shall proceed diligently with performance of the Contract and the Owner shall continue to make payments in accordance with the Contract Documents.

§ 15.1.4.2 The Contract Sum and Contract Time shall be adjusted in accordance with the Initial Decision Maker's decision, subject to the right of either party to proceed in accordance with this Article 15. The Design Consultant will issue Certificates for Payment in accordance with the decision of the Initial Decision Maker.

§ 15.1.5 Claims for Additional Cost

If the Contractor wishes to make a Claim for an increase in the Contract Sum, notice as provided in Section 15.1.3 shall be given before proceeding to execute the portion of the Work that is the subject of the Claim. Prior notice is

AIA Document A201 – 2017. Copyright © 1911, 1915, 1918, 1925, 1937, 1951, 1958, 1961, 1963, 1966, 1970, 1976, 1987, 1997, 2007 and 2017. All rights reserved. "The American Institute of Architects," "American Institute of Architects," "AIA," the AIA Logo, and "AIA Contract Documents" are trademarks of The American Institute of Architects. This document was produced at 15:45:22 CDT on 05/11/2026 under Subscription No.20240042832 which expires on 07/01/2026, is not for resale, is licensed for one-time use only, and may only be used in accordance with the AIA Contract Documents® Terms of Service. To report copyright violations, e-mail docinfo@aiacontracts.com.
User Notes: (69f1008b5f1b2d23ced2487a)

not required for Claims relating to an emergency endangering life or property arising under Section 10.4.

§ 15.1.6 Claims for Additional Time

§ 15.1.6.1 If the Contractor wishes to make a Claim for an increase in the Contract Time, notice as provided in Section 15.1.3 shall be given. The Contractor's Claim shall include an estimate of cost and of probable effect of delay on progress of the Work. In the case of a continuing delay, only one Claim is necessary.

§ 15.1.6.2 If adverse weather conditions are the basis for a Claim for additional time, such Claim shall be documented by data substantiating that weather conditions were abnormal for the period of time, could not have been reasonably anticipated, and had an adverse effect on the scheduled construction.

§ 15.1.7 Waiver of Claims for Consequential Damages

The Contractor and Owner waive Claims against each other for consequential damages arising out of or relating to this Contract. This mutual waiver includes

.1 damages incurred by the Owner for rental expenses, for losses of use, income, profit, financing, business and reputation, and for loss of management or employee productivity or of the services of such persons; and

.2 damages incurred by the Contractor for principal office expenses including the compensation of personnel stationed there, for losses of financing, business and reputation, and for loss of profit, except anticipated profit arising directly from the Work.

This mutual waiver is applicable, without limitation, to all consequential damages due to either party's termination in accordance with Article 14. Nothing contained in this Section 15.1.7 shall be deemed to preclude assessment of liquidated damages, when applicable, in accordance with the requirements of the Contract Documents.

§ 15.2 Initial Decision

§ 15.2.1 Claims, excluding those where the condition giving rise to the Claim is first discovered after expiration of the period for correction of the Work set forth in Section 12.2.2 or arising under Sections 10.3, 10.4, and 11.5, shall be referred to the Initial Decision Maker for initial decision. The Design Consultant will serve as the Initial Decision Maker, unless otherwise indicated in the Agreement. Except for those Claims excluded by this Section 15.2.1, an initial decision shall be required as a condition precedent to mediation of any Claim. If an initial decision has not been rendered within 30 days after the Claim has been referred to the Initial Decision Maker, the party asserting the Claim may demand mediation and binding dispute resolution without a decision having been rendered. Unless the Initial Decision Maker and all affected parties agree, the Initial Decision Maker will not decide disputes between the Contractor and persons or entities other than the Owner.

§ 15.2.2 The Initial Decision Maker will review Claims and within ten days of the receipt of a Claim take one or more of the following actions: (1) request additional supporting data from the claimant or a response with supporting data from the other party, (2) reject the Claim in whole or in part, (3) approve the Claim, (4) suggest a compromise, or (5) advise the parties that the Initial Decision Maker is unable to resolve the Claim if the Initial Decision Maker lacks sufficient information to evaluate the merits of the Claim or if the Initial Decision Maker concludes that, in the Initial Decision Maker's sole discretion, it would be inappropriate for the Initial Decision Maker to resolve the Claim.

§ 15.2.3 In evaluating Claims, the Initial Decision Maker may, but shall not be obligated to, consult with or seek information from either party or from persons with special knowledge or expertise who may assist the Initial Decision Maker in rendering a decision. The Initial Decision Maker may request the Owner to authorize retention of such persons at the Owner's expense.

§ 15.2.4 If the Initial Decision Maker requests a party to provide a response to a Claim or to furnish additional supporting data, such party shall respond, within ten days after receipt of the request, and shall either (1) provide a response on the requested supporting data, (2) advise the Initial Decision Maker when the response or supporting data will be furnished, or (3) advise the Initial Decision Maker that no supporting data will be furnished. Upon receipt of the response or supporting data, if any, the Initial Decision Maker will either reject or approve the Claim in whole or in part.

§ 15.2.5 The Initial Decision Maker will render an initial decision approving or rejecting the Claim, or indicating that the Initial Decision Maker is unable to resolve the Claim. This initial decision shall (1) be in writing; (2) state the

AIA Document A201 – 2017. Copyright © 1911, 1915, 1918, 1925, 1937, 1951, 1958, 1961, 1963, 1966, 1970, 1976, 1987, 1997, 2007 and 2017. All rights reserved. "The American Institute of Architects," "American Institute of Architects," "AIA," the AIA Logo, and "AIA Contract Documents" are trademarks of The American Institute of Architects. This document was produced at 15:45:22 CDT on 05/11/2026 under Subscription No.20240042832 which expires on 07/01/2026, is not for resale, is licensed for one-time use only, and may only be used in accordance with the AIA Contract Documents® Terms of Service. To report copyright violations, e-mail docinfo@aiacontracts.com.
User Notes:
(69f1008b5f1b2d23ced2487a)

reasons therefor; and (3) notify the parties and the Design Consultant, if the Design Consultant is not serving as the Initial Decision Maker, of any change in the Contract Sum or Contract Time or both. The initial decision shall be final and binding on the parties but subject to mediation and, if the parties fail to resolve their dispute through mediation, to binding dispute resolution.

§ 15.2.7 In the event of a Claim against the Contractor, the Owner may, but is not obligated to, notify the surety, if any, of the nature and amount of the Claim. If the Claim relates to a possibility of a Contractor's default, the Owner may, but is not obligated to, notify the surety and request the surety's assistance in resolving the controversy.

§ 15.2.8 If a Claim relates to or is the subject of a mechanic's lien, the party asserting such Claim may proceed in accordance with applicable law to comply with the lien notice or filing deadlines.

§ 15.3 Mediation

§ 15.3.1 Claims, disputes, or other matters in controversy arising out of or related to the Contract, except those waived as provided for in Sections 9.10.4, 9.10.5, and 15.1.7, shall not be subject to mediation or arbitration as a condition precedent to binding dispute resolution.

AIA Document A201 – 2017. Copyright © 1911, 1915, 1918, 1925, 1937, 1951, 1958, 1961, 1963, 1966, 1970, 1976, 1987, 1997, 2007 and 2017. All rights reserved. "The American Institute of Architects," "American Institute of Architects," "AIA," the AIA Logo, and "AIA Contract Documents" are trademarks of The American Institute of Architects. This document was produced at 15:45:22 CDT on 05/11/2026 under Subscription No.20240042832 which expires on 07/01/2026, is not for resale, is licensed for one-time use only, and may only be used in accordance with the AIA Contract Documents® Terms of Service. To report copyright violations, e-mail docinfo@aiacontracts.com.
User Notes: (69f1008b5f1b2d23ced2487a)

SECTION 01010

SUMMARY OF THE WORK

PART 1 GENERAL

1.1 SECTION INCLUDES

A. Summary of Work: Contract, contractor use of premises.

B. Contract Considerations: Contingency allowance, schedule of values, applications for payment, change procedures, alternates.

C. Coordination and Meetings: Coordination, field engineering, cutting and patching, meetings, progress meetings, examination, preparation.

D. Submittals: Submittal procedures, construction progress schedules, proposed products list, shop drawings, product data, samples, manufacturers' installation instructions, manufacturers' certificates.

E. Quality Control: Quality assurance - control of installation, Tolerances, References, Mock-ups, Manufacturers' field services and reports.

F. Construction Facilities and Temporary Controls: Electricity, temporary lighting for construction purposes, water service, temporary sanitary facilities, barriers and fencing, exterior enclosures, protection of installed work, security, access roads, parking, progress cleaning and waste removal, project identification, field offices and sheds, removal of utilities, facilities, and controls.

G. Material and Equipment: Products, transportation, handling, storage, and protection, products options, substitutions.

H. Contract Closeout: Contract closeout procedures, final cleaning, adjusting, project record documents, operation and maintenance data, spare parts and maintenance materials, warranties.

1.2 CONTRACT

A. Summary of Work:
Base Bid: The scope of this project is the electrical service upgrade and lighting for the Trimmier Park Football Field. Work is to be completed per the drawings and specifications. This includes:
   a. The installation of a new electrical service pedestal and equipment.
   b. The installation of a new owner-provided scoreboard with associated structural steel support structure and concrete foundations.

c. The installation of new owner-provided Musco Lighting poles.
d. The installation of new owner-provided Musco Lighting fixtures.
e. The installation of new owner-provided Musco Lighting controls equipment.
f. The installation of a new underground feeder to serve the existing well pump.
g. The installation of new underground feeders to serve the new Musco system.

B. Contract Description: Stipulated sum.

1.3 CONTRACTOR USE OF PREMISES

A. Limit use of premises to allow continued Owner occupancy. All facilities shall remain in use except the immediate work area for this project. Obey all Facility Regulations and coordinate access and schedule of work with Project Manager.

1.4 CONTINGENCY ALLOWANCE

A. Include in the Contract the stipulated amount for use upon Owner's instruction.

B. Contractor's costs for products, delivery, installation, labor, insurance, payroll, taxes, bonding, equipment rental, overhead and profit are included in Change or Field Orders authorizing expenditure of funds from this Contingency Allowance.

1.5 SCHEDULE OF VALUES

A. Submit Schedule of Values on AIA Form G703 within five (5) calendar days of notification of project award.

1.6 APPLICATIONS FOR PAYMENT

A. Submit two signed and notarized originals of each application on AIA Form G702 and AIA Form G703. Submit Lien Release Waivers, including from subcontractors and major suppliers, with each pay application.

B. Content and Format: Utilize Schedule of Values, AIA Form G703, for listing items in Application for Payment.

C. Payment Period: Monthly, except for final payment of retainage after all Close Out documents are submitted and approved.

1.7 CHANGE ORDER PROCEDURES

A. All contract changes involving a change in scope, payment and/or time shall be made by change order.

B. Stipulated Sum/Price Change Order: Based on Proposal Request and Contractor's fixed price quotation or Contractor's request for a Change Order as approved by Owner.

1.8 ALTERNATE BID ITEMS

A. Alternates quoted on Bid Form, if any, will be reviewed and accepted in the order listed.

B. Coordinate related Work and modify surrounding Work as required.

C. Schedule of Alternates: Listed on bid form, as applicable.

1.9 COORDINATION

A. Coordinate scheduling, submittals, and Work at the facility to ensure an efficient and orderly sequence and to facilitate the continued uninterrupted use of the Facility.

B. Request Utility interruptions at least 72 hours in advance. Note that due to scheduling in the facility, utility interruptions must be approved.

1.10 FIELD ENGINEERING

A. Establish elevations, lines, and levels and certify that elevations and locations of the Work conform to the Contract Documents. Verify existing conditions.

B. Contractor shall field verify all measurements and quantities required for a complete installation.

1.11 PRECONSTRUCTION MEETINGS

A. Owner will schedule a pre-construction meeting after contract award for all affected parties.

1.12 PROGRESS MEETINGS

A. Schedule and administer meetings throughout progress of the Work at pre-approved intervals.

B. Preside at meetings, record minutes, and distribute copies within two days to those affected by decisions made.

1.13 CONSTRUCTION PROGRESS SCHEDULES

A. Submit initial progress schedule in duplicate within five (5) calendar days after date of notice of award of project for Project Manager’s review.

B. Submit revised schedules with each Application for Payment, identifying changes since previous version. Indicate estimated percentage of completion for each item of Work at each submission.

1.14 SHOP DRAWINGS

A. Shop Drawings for Review: Submit to Project Manager/Engineer for review for the limited purpose of checking for conformance with information given and the design concept expressed in the Contract Documents.

B. Submit four copies for use by the owner plus the number of copies that Contractor requires. Electronic submittals may be acceptable with prior approval of the Project Manager and Engineer. Close Out documents shall include electronic and hard copies of all submittals.

1.15 QUALITY ASSURANCE - CONTROL OF INSTALLATION

A. Monitor quality control over suppliers, manufacturers, products, services, site conditions, and workmanship, to produce Work of specified quality.

B. Comply with manufacturers' written instructions.

C. Comply with specified standards as minimum quality for the Work except when more stringent tolerances, codes, or specified requirements indicate higher standards or more precise workmanship.

D. Supply certification from manufacturer that the installed Work meets or exceeds all manufacturers’ requirements.

F. See contractor Pre-Qualification Specification

1.16 EXAMINATION

A. Verify that existing site conditions and subsurfaces are acceptable for subsequent Work. Beginning new Work means acceptance of existing conditions.

B. Verify that utility services are available, of the correct characteristics, and in the correct location.

1.17 PREPARATION

A. Prepare surfaces prior to applying next material installation.

1.18 TOLERANCES

A. Monitor fabrication and installation tolerance control of installed Products over suppliers, manufacturers, Products, site conditions, and workmanship, to produce acceptable Work. Do not permit tolerances to accumulate. Comply fully with manufacturers' tolerances.

1.19 REFERENCES

A. Conform to reference standards by date of issue current as of date of Contract Documents.

B. Should specified reference standard conflict with Contract Documents, request clarification from Project Manager before proceeding.

1.20 ELECTRICITY

A. Unless otherwise provided for, Contractor shall be allowed to utilize power from the facility in moderate amounts.

B. Provide power outlets for construction operations, branch wiring, distribution boxes, and flexible power cords as required.

1.21 TEMPORARY LIGHTING FOR CONSTRUCTION PURPOSES

A. Provide and maintain temporary lighting for construction operations as may be required.

B. Provide branch wiring from power source to distribution boxes with lighting conductors, pigtails, and lamps as required.

1.22 WATER SERVICE

A. Owner shall provide suitable potable water in moderate quantities without cost to the Contractor.

1.23 TEMPORARY SANITARY FACILITIES

A. Contractor may use sanitary facilities located at the facility in lieu of contractor provided temporary facilities. Facilities will also continue to be used by the public and shall be maintained clean and in a sanitary condition.

1.24 BARRIERS AND FENCING

A. Provide barriers and fencing as needed to prevent unauthorized entry to construction areas and to protect existing facilities and adjacent properties from dust, debris and damage.

1.25 PROTECTION OF INSTALLED WORK

A. Protect installed Work and provide special protection where specified in individual specification sections. Prohibit traffic or storage upon grass or paving surfaces.

1.26 SECURITY

A. Provide security and facilities to protect Work and existing facilities from unauthorized entry, vandalism, or theft.

1.27 ACCESS ROADS & HAULING

A. Maintain temporary access routes through the public thoroughfare and parking areas to serve the construction area as required without obstructing traffic or blocking access for facility staff or participants. Provide drive pads as required.

B. Restore site to pre-construction condition. Fill ruts, replace broken or damaged amenities, sod disturbed areas.

1.28 PARKING

A. Arrange for temporary parking areas to accommodate construction personnel on site. Do not block traffic.

1.29 PROGRESS CLEANING AND WASTE REMOVAL

A. Collect and maintain work areas free of waste materials, debris, and rubbish on a daily basis. Maintain site in a clean and orderly condition. Provide refuse containers and dispose of construction debris legally off site. The Owner may request load tickets from landfills permitted to accept construction debris.

1.30 REMOVAL OF UTILITIES, FACILITIES, AND CONTROLS

A. Remove temporary utilities, equipment, facilities and materials, prior to Substantial Completion review.

B. Clean and repair damage caused by installation or use of temporary work.

C. Restore existing facilities used during construction to original condition. Restore permanent facilities used during construction to specified condition.

1.31 PRODUCTS

A. Products: Means new material, machinery, components, equipment, fixtures, and systems forming the Work, but does not include machinery and equipment used for preparation, fabrication, conveying and erection of the Work.

1.32 TRANSPORTATION, HANDLING, STORAGE AND PROTECTION

A. Transport, handle, store, and protect Products in accordance with manufacturers' instructions.

1.33 PRODUCT OPTIONS

A. Products Specified by Naming One Manufacturer or equal: Products of manufacturer named approved as "Basis of Design". Equal alternate products to be approved by Owner as Substitutions. Submit product data as required in SUBSTITUTIONS.

1.34 SUBSTITUTIONS

A. Architect/Engineer will consider requests for Substitutions only within 10 days after date established in Notice to Proceed. For Pre-Bid approved Substitutions, submit request 5 calendar days or more before bid date with all back up data to show that all characteristics of the Basis of Design product are met with the substituted product or material.

B. Document each request with complete backup data substantiating compliance of proposed Substitution with all characteristics of the materials specified in the Contract Documents.

C. Submit pdf of request by email for Substitution for consideration. Limit each request to one proposed Substitution.

D. Substitution shall indicate all product properties and show that they are equal to that Specified.

E. Acceptance or Rejection of Pre-Bid Substitution Requests will be issued by Addendum.

1.35 FINAL CLEANING

A. Execute final cleaning prior to final inspection of work area. User may occupy portions of the work incrementally as the work is completed and accepted. Entire project to be ready for use by User once all areas of work are completed.

B. Clean debris from site and drainage systems.

C. Remove waste and surplus materials, rubbish, and construction facilities from the facility and the site. Leave site in raked and smooth condition.

1.36 PROJECT RECORD DOCUMENTS

A. Maintain on site one set of Contract Documents to be utilized only for record documents.

B. Record actual revisions to the Work. Record information concurrent with construction progress.

C. Specifications: Legibly mark and record at each Product section a description of actual Products installed.

D. Record Documents and Shop Drawings: Legibly mark each item to record actual construction.

E. Submit documents to Project Manager with claim for final Application for Payment.

F. Submit pdf copy to include:
   a. As built drawings and specifications
   b. Approved submittals
   c. Warrantees and guarantees
   d. Certificate of Occupancy or Letter of Completion from Permitting Department or other agencies, as applicable.

1.37 WARRANTIES

A. Product and Manufacturer's Warranties shall be provided per specifications.

B. In addition, all materials and labor shall be warranted for a minimum of one year after Substantial Completion of the entire project. Contractor to promptly repair all deficiencies within that time. A warranty inspection shall be scheduled by the Owner, with the Contractor and Owner's representative, before the end of the warranty period, in order to review the work and note deficiencies for the Contractor to correct. Said meeting may be waived if no deficiencies are noted.

PART 2 PRODUCTS
Not Used.

PART 3 EXECUTION
Not Used.

END OF SECTION

SECTION 01210

ALLOWANCES

PART 1 GENERAL

1.1 RELATED DOCUMENTS
Drawings and general provisions of the Contract, including General Conditions and Division 01 Specification Sections, apply to this Section.

1.2 SUMMARY

A. Allowances will be utilized to:

1. Defer selection of certain items until more information is available.

2. Provide for discretionary installation of materials where exact and specific conditions cannot be determined in advance.

3. Provide for the discretionary use of labor where tasks and time frames cannot be determined in advance.

B. Include in Total Bid a stipulated lump sum allowance amount as specified in this Section.

1.3 ALLOWANCE

A. Include in the Total Base Quote a stipulated allowance(s) as indicated on the Quote Form for the use upon Owner's instruction. Upon Contractor inspection and Owner approval, any additional work that may be required, but not covered in the original Scope of Work (Base Scope Quote), shall be added to the scope and cost charged against the Contingency Allowance. Contractor's cost for products, delivery, installation labor, insurance, payroll, bonding, equipment rental and overhead and profit will be included in the Allowances. Contractor's markups on allowances are limited to 10% for subcontractor's work and 15% for his own forces.

B. Use of Contingency Allowance(s) shall be approved in writing by the Owner before any materials are ordered or work performed.

C. Upon completion of the Work, any unused portion of the Allowances shall be credited back to the City of Mobile in the form of a Change Order.

D. Contractor shall provide a detailed proposal of the work with overhead and profit broken out. Such proposals shall include proposals from subcontractors, also showing their detailed proposal with overhead and profit broken out.

1.4 SELECTION AND PURCHASE

A. Advise the Project Manager when final selection and purchase of allowance item must be complete to avoid delay.

1.5 SUBMITTALS

A. Request for Use of Allowance: Submit proposals for approval that detail and break out costs for contractors and subcontractor's markups.

B. After Use of Allowance: Submit invoices to show quantity delivered to the site for each allowance.

PART 2 PRODUCTS

Not used

PART 3 EXECUTION

3.1 INSPECTION

A. Promptly inspect all Allowance items upon delivery. Immediately report any shortage, damage, or defects to Project Manager.

3.2 PREPARATION

A. Coordinate materials and installation to assure that each item is integrated with related construction activities.

3.3 ALLOWANCE SCHEDULE

A. Include as a Contingency Allowance the lump sum amount of Twenty Thousand Dollars ($20,000.00).

END OF SECTION

SECTION 01320

CONSTRUCTION PROGRESS DOCUMENTATION

PART 1 - GENERAL

1.1 RELATED DOCUMENTS

A. Drawings and general provisions of the Contract, including General and Supplementary Conditions and other Division 1 Specification Sections, apply to this Section.

1.2 SUMMARY

A. Section includes administrative and procedural requirements for documenting the progress of construction during performance of the Work, including the following:

1. Start-up construction schedule.
2. Contractor's construction schedule.
3. Field condition reports.
4. Special reports.

1.3 INFORMATIONAL SUBMITTALS

A. Format for Submittals: Submit required submittals in the following format:

1. PDF electronic file.

B. Start-up construction schedule.

1. Approval of cost-loaded start-up construction schedule will not constitute approval of schedule of values for cost-loaded activities.

C. Contractor's Construction Schedule: Initial schedule, of size required to display entire schedule for the entire construction period.

D. Field Condition Reports: Submit at time of discovery of differing conditions.

E. Special Reports: Submit at time of unusual event.

F. Existing Condition Photos: Submit prior to onsite mobilization to record existing conditions. If, during construction, damage occurs by others, notify Project Manager right away.

PART 2 - PRODUCTS

2.1 CONTRACTOR'S CONSTRUCTION SCHEDULE, GENERAL

A. Time Frame: Extend schedule from date established for the Notice to Proceed to date of final completion.

B. Activities: Treat each story or separate area as a separate numbered activity for each principal element of the Work. Show the following:

1. Activity Duration
2. Procurement Activities: Include procurement process activities for long lead items and major items, requiring a cycle of more than 60 days, as separate activities in schedule. Procurement cycle activities include, but are not limited to, submittals, approvals, purchasing, fabrication, and delivery.
3. Submittal Review Time: Include review and resubmittal times indicated in Division 1 Section "Submittal Procedures" in schedule. Coordinate submittal review times in Contractor's construction schedule with submittal schedule.
4. Startup and Testing Time: Include not less than fifteen (15) days for startup and testing.
5. Substantial Completion: Indicate completion in advance of date established for Substantial Completion, and allow time for Architect's administrative procedures necessary for certification of Substantial Completion.

C. Constraints: Include constraints and work restrictions indicated in the Contract Documents and as follows in schedule and show how the sequence of the Work is affected.

1. Phasing: Arrange list of activities on schedule by phase.
2. Work Restrictions: Show the effect of the following items on the schedule:

a. Coordination with existing construction.
b. Limitations of continued occupancies.
c. Uninterruptible services.
d. Partial occupancy before Substantial Completion.
e. Use of premises restrictions.
f. Provisions for future construction.
g. Seasonal variations.
h. Environmental control.

D. Milestones: Include milestones indicated in the Contract Documents in schedule, including, but not limited to, the Notice to Proceed, Substantial Completion, and final completion.

E. Upcoming Work Summary: Prepare summary report indicating activities scheduled to occur or commence prior to submittal of next schedule update. Summarize the following issues:

1. Unresolved issues.
2. Unanswered RFIs.
3. Rejected or unreturned submittals.
4. Notations on returned submittals.

2.2 START-UP CONSTRUCTION SCHEDULE

A. Bar-Chart Schedule: Submit start-up horizontal bar-chart-type construction schedule within seven (7) days of date established for the Notice to Proceed.

B. Preparation: Indicate each significant construction activity separately. Identify first workday of each week with a continuous vertical line. Outline significant construction activities for first 30 days of construction.

2.3 CONTRACTOR'S CONSTRUCTION SCHEDULE (CPM SCHEDULE)

A. CPM Schedule Preparation: Prepare a list of all activities required to complete the Work. Using the start-up network diagram, prepare a skeleton network to identify probable critical paths.

1. Activities: Indicate the estimated time duration, sequence requirements, and relationship of each activity in relation to other activities. Include estimated time frames for the following activities:

    a. Preparation and processing of submittals.
    b. Mobilization and demobilization.
    c. Purchase of materials.
    d. Delivery.
    e. Fabrication.
    f. Utility interruptions.
    g. Installation.
    h. Work by Owner that may affect or be affected by Contractor's activities.
    i. Testing and commissioning.
    j. Punch list and final completion.
    k. Activities occurring following final completion.

2. Critical Path Activities: Identify critical path activities, including those for interim completion dates. Scheduled start and completion dates shall be consistent with Contract milestone dates.
3. Format: Mark the critical path. Locate the critical path near center of network; locate paths with most float near the edges.

B. Contract Modifications: For each proposed contract modification and concurrent with its submission, prepare a time-impact analysis using a network fragment to demonstrate the effect of the proposed change on the overall project schedule.

C. Initial Issue of Schedule: Identify critical activities. Prepare tabulated reports showing the following:

1. Contractor or subcontractor and the Work or activity.
2. Description of activity.
3. Principal events of activity.
4. Immediately preceding and succeeding activities.
5. Early and late start dates.
6. Early and late finish dates.
7. Activity duration in workdays.

D. Schedule Updating: Submit at each weekly coordination meeting.

1. Identification of activities that have changed.
2. Changes in early and late start dates.
3. Changes in early and late finish dates.
4. Changes in activity durations in workdays.
5. Changes in the critical path.
6. Changes in total float or slack time.
7. Changes in the Contract Time.

Note: The Contractor may be allowed additional construction days due to inclement conditions (“rain days”) only as such are appropriately documented and are in excess of the NOAA/National Weather Service average (previous 5 years) for the given month. A “rain day” is defined as more than a “trace” (0.10”) of rain falling within a given 24 hour period. The Contractor shall provide documentation and formally request any “rain days” they feel are legitimately due. Documentation shall be submitted to the Project Manager, in writing, within ten (10) calendar days of the rain event.

2.4 REPORTS

A. Field Condition Reports: Immediately on discovery of a difference between field conditions and the Contract Documents, prepare and submit a detailed report. Submit with a Request for Information. Include a detailed description of the differing conditions, together with recommendations for changing the Contract Documents.

2.5 SPECIAL REPORTS

A. General: Submit special reports directly to Owner within one day of an occurrence. Distribute copies of report to parties affected by the occurrence.

B. Reporting Unusual Events: When an event of an unusual and significant nature occurs at Project site, whether or not related directly to the Work, prepare and submit a special report. List chain of events, persons participating, response by Contractor's personnel, evaluation of results or effects, and similar pertinent information. Advise Owner in advance when these events are known or predictable.

PART 3 - EXECUTION

Not Used

END OF SECTION

SECTION 01330

SUBMITTAL PROCEDURES

PART 1 GENERAL

1.1 RELATED DOCUMENTS

A. Drawings and general provisions of the Contact, including General and Supplementary Conditions and Division 01 Specification Section, apply to this Section.

1.2 SUMMARY

A. Section Includes:
   1. Submittal Procedure
   2. Submittal Schedule
   3. Shop Drawings
   4. Product Data
   5. Samples

1.3 SUBMITTAL PROCEDURES

A. Number each submittal with Project Manual specification Section number and sequential number within each section. Number resubmittals with original number and an alphabetic suffix.

B. Identify Project, Contractor, Subcontractor or supplier, pertinent Drawing sheet and detail numbers, and specification Section number, as appropriate.

C. Submit all submittals simultaneously for each Produce or Specification Section. Where multiple Products function as an assembly, group submittals for all related Products into single submittal.

D. Project Manager will not review incomplete submittals.

E. Apply Contractor's stamp, signed or initialed certifying that:

   1. Submittal was reviewed.
   2. Products, field dimensions, and adjacent construction have been verified.
   3. Information has been coordinated with requirements for Work and Contract Documents.

F. Schedule submittals to expedite the Project, and deliver to Project Manager. Coordinate submittal of related items.

G. For each submittal, allow 10 days for Project Manager's review, excluding delivery time to and from Contractor. Identify variations from Contract Documents and Product or system limitations that may be detrimental to successful performance of completed Work.

H. Revise and resubmit submittals when required; identify all changes made since previous submittals.

I. Distribute copies of reviewed submittals to concerned parties and to Project Record Documents file. Instruct parties to promptly report any inability to comply with provisions.

1.4 SUBMITTAL SCHEDULE

A. Submit a submittal schedule showing all submittals proposed for project, including:
   1. Submittals for Review
   2. Closeout Submittals.

B. Include for each submittal:
   1. Specification section number.
   2. Description of submittal.
   3. Type of submittal.
   4. Anticipated submittal date.

C. Submit one (1) PDF copy.

1.5 SHOP DRAWINGS

A. Present information in clear and thorough manner.

B. Identify details by reference to sheet and detail numbers or areas shown on Drawings.

C. Reproductions of details contained in Contract Documents are not acceptable.

D. Submit one (1) PDF copy. One PDF copy will be returned to Contractor for printing and distribution.

1.6

1.7 PRODUCT DATA

A. Mark each copy to identify applicable products, models, options, and other data.

B. Supplement manufacturers' standard data to provide information unique to this Project.

C. Submit (1) PDF copy. Project Manager will return (1) PDF copy to Contractor for distribution.

1.8 SAMPLES

A. Submit samples to illustrate functional and aesthetic characteristics of Products, with integral parts and attachment of devices. Coordinate sample submittals for interfacing work.

B. Where so indicated, submit samples of finishes from the full range of manufacturers' standard colors, textures, and patterns for Project Manager's selection.

C. Include identification for each sample, with full Project information.

D. Project Manager will notify Contractor of approval or rejection of samples, or of selection of color, texture or pattern if full range is submitted.

END OF SECTION

SECTION 01400
PRE-BID QUALIFICATIONS & CONSTRUCTION QUALITY REQUIREMENTS

PART 1 - GENERAL

1.1 RELATED DOCUMENTS

A. Drawings and general provisions of the Contract, including General and Supplementary Conditions and other Division 1 Specification Sections, apply to this Section.

1.2 SUMMARY

A. Section includes administrative and procedural requirements for general contractor/installer **pre-bid qualifications** and pre-qualification checklist form to be completed and submitted with the sealed bid.

B. The City of Mobile is unable to issue payment or deposits on materials that are not on the project site, or in the City of Mobile stored in a climate controlled, bonded warehouse where a City representative can verify their presence and proper storage. Please refer to Construction Contract and General Conditions for more detail on payment procedures.

C. Contractor’s Quality Control Plan

1. Specific quality assurance, control and schedule requirements for individual construction activities are specified in the Sections that specify those activities. Requirements in those Sections may also cover production of standard products.

D. Related`:
1. Division 1 Section "Construction Progress Documentation" for developing a schedule of required tests, inspections, submittals, orders, and installation.

1.3 PRE-BID QUALIFICATIONS

A. Due to the extremely critical installation schedule, General Contractor and Installer qualifications will be examined prior to the bid. The intent is to pre-qualify general contractors and installers with a proven, successful record of installations of similar size, and similar installation time in occupied buildings. Companies without proven records of success will not be approved for work on this project. Companies who have not with met quality requirements and/or construction schedule during other City of Mobile projects will also not be approved for work on this project.

B. Submittals indicating proven record of success shall include:
   1. Demonstrate a minimum of 5 years of experience in experience in the sports lighting industry.
   2. Statement indicating how the company will staff and manage this project. Indicate after hours' work, additional employees, or any other information that would support the case that the general contractor and installer will be able to comply with requirements within the stated timeframe.
   3. By submitting qualification information, the general contractor and/or installer affirm that they are able to provide the materials needed for this project under the payment terms of the contract.
   4. Provide documentation of at least 5 projects of similar size, scope, and timeframe performed for other entities and that support the assertion of successful performance within the last 5 years.
      a. Include project name, year completed and facility owner/operator contact names and numbers for reference.
      b. Indicate size of installation, scope, and installation time of each project listed.
   5. All potential bidders will be subject to final approval by owner based on experience level of past projects within the past 5 years.

C. **Submit Installer qualifications by 3pm local time Wednesday, May 27, 2026**, to Chuck Babin, Project Manager, at chuck.babin@cityofmobile.gov. **An addendum will be issued by Friday, May 29, 2026, listing approved installers.**

1.4 CONTRACTOR'S QUALITY-CONTROL PLAN FOR CONSTRUCTION

A. Quality-Control Plan, General: Submit quality-control plan and schedule within 2 days of Notice to Proceed. Submit in format acceptable to Owner. Identify personnel, procedures, controls, instructions, tests, records, schedule and forms to be used to carry out Contractor's quality-assurance and quality-control responsibilities.

B. Submittal Procedure: Describe procedures for ensuring compliance with requirements through review and management of submittal process.

C. Continuous Inspection of Workmanship: Describe process for continuous inspection during construction to identify and correct deficiencies in workmanship in addition to testing and inspection specified. Indicate types of corrective actions to be required to bring work into compliance with standards of workmanship established by Contract requirements and approved mockups.

PART 2 - PRODUCTS (Not Used)

PART 3 - EXECUTION (Not Used)

END OF SECTION 01400

PRE-BID QUALIFICATIONS & CONSTRUCTION QUALITY REQUIREMENTS FORM

If a General Contractor intends to rely upon the qualifications and experience of subcontractor(s) to demonstrate successful completion of projects of similar size, type, and complexity; the General Contractor's prequalification response shall include the information required herein for each subcontractor unless stated otherwise.

Company Name: _____

Alabama G.C. License #: _____
(An Alabama G.C. License is not required to submit a pre-qualification proposal. However, it is required prior to submitting a bid)

Address of organization's principal place of business: _____

_____

_____

Phone: _____

Contact Name: _____

e-mail: _____

Largest Value Similar Project: _____

Current Aggregate Value under Construction: _____

Five Year Average: _____

Surety Company: _____

1. Has your organization ever received a "Notice to Cure" letter (or equivalent) on any unfinished work and/or defective work or defaulted on a contract with any State, County, or City Governmental Agencies?

Circle one: YES / NO
(If yes, provide description of the notice and outcome)

2. Is your organization currently, or previously been, involved in a claim that has resulted in a

bond claim mediation, arbitration, or litigation on any projects with any State, County, or City Governmental Agencies?

Circle one: YES / NO
(If yes, provide description of the claim and outcome)

3. Has your organization completed projects of similar type, size, scope and complexity for projects in excess of $500,000.00?

Circle one: YES / NO
Include project descriptions for five (5) projects of similar type, size, scope and complexity, which have been completed over the past five (5) years. The project descriptions should include, at a minimum, the name, address and telephone number of Owner, Architect, Construction Manager or Program Manager; the original and final Contract value; the original contract completion date and actual completion date.

4. Does your organization have the ability to provide 100% Performance and Payment Bonds for projects up to $5,000,000.00?

Circle one: YES / NO
(Provide a bondability letter from surety) Not required for subcontractor(s)

5. Confirmation that insurance requirements of the City of Mobile can and will be furnished and a letter of confirmation from your company's underwriter, broker, and/or agent indicating the required liability insurance is either in place or obtainable by the company submitting this pre-qualification proposal: Not required for subcontractor(s)

Workmen's Compensation Insurance: - Statutory-amount and coverage as required by all applicable laws, rules or regulations of the State of Alabama and the United States of America.

Employee's Liability Insurance shall be provided for limits of liability not less than:

A. Bodily Injury by Accident $1,000,000 each accident
B. Bodily Injury by Disease $1,000,000 each employee
C. Bodily Injury by Disease $1,000,000 each policy

The Contractor shall provide Broad Form (commonly termed Comprehensive) General Liability Insurance (including premises-product-completed operations, independent contractors, and blanket contractual liability), specifically covering the obligations assumed by the Contractor for limits of liability not less than:

A. Bodily Injury	$1,000,000 each person $1,000,000 each occurrence
B. Property Damage	$1,000,000 each occurrence; or
C. Bodily Injury and Property Damage	$1,000,000 combined single limit

Such comprehensive policy shall include the following:

A. All liability of the Contractor, for the Contractor's Direct Operations.
B. Subcontractor's Operations.
C. Completed Operations Cover, thereby meaning any loss which shall occur after the contract has been completed, but which can be traced back to the Contract.
D. General Aggregate Limit of $2,000,000 shall apply on a "Per Project" Basis.
E. Contractual Liability, meaning thereby; any risk assumed by the Contractor under Hold Harmless Agreements or any other assumption of liability, but specifically items 11.1.1.8.3G herein below
F. Broad Form Property damage Coverage, including Completed Operations.
G. Personal Injury Liability, with employee's exclusions removed

The Contractor shall carry for himself and shall require that all Subcontractors and all Owners of Automobiles or trucks rented or hired on the contract carry, until the Contracts is completed, Comprehensive Automobile Liability Coverage for Bodily Injury and property. Damage for any auto in amounts not less than the minimum amounts as indicated. The Contractor and Subcontractor shall also carry for themselves insurance for all non-owned and hired automobile at the limits of liability as indicated below:

A. Bodily Injury	$1,000,000 each person $1,000,000 each occurrence
B. Property damage	$1,000,000 each occurrence; or,
C. Property damage	$1,000,000 combined single limit
Umbrella/Excess Liability:	$2,000,000 combined single limit each occurrence for bodily injury and/or property damage

Circle one: YES / NO

6. Provide resumes of key personnel anticipated to be involved in this project. Include the following key personnel.
   A. Principal-In-Charge / Project Executive. Not required for subcontractor(s)
   B. Project Manager Not required for subcontractor(s)

SECTION 01635

SUBSTITUTION PROCEDURES

PART 1 - GENERAL

1.1 RELATED DOCUMENTS

A. Drawings and general provisions of the Contract, including General and Supplementary Conditions and other Division 1 Specification Sections, apply to this Section.

1.2 SUMMARY

A. Section includes administrative and procedural requirements for substitutions.

B. Related Sections:

1. Divisions 2 through 16 Sections for specific requirements and limitations for substitutions and pre-bid approvals.

1.3 DEFINITIONS

A. Substitutions: Changes in products, materials, equipment, and methods of construction from those required by the Contract Documents and proposed by Contractor.

1. Substitutions for Cause: Changes proposed by Contractor that are required due to changed Project conditions, such as unavailability of product, regulatory changes, or unavailability of required warranty terms.
2. Substitutions for Convenience: Changes proposed by Contractor or Owner that are not required in order to meet other Project requirements but may offer advantage to Contractor or Owner.

1.4 SUBMITTALS

A. Substitution Requests: Submit a PDF for each request for consideration. Identify product or fabrication or installation method to be replaced.

1. Documentation: Show compliance with requirements for substitutions and the following, as applicable:

a. Statement indicating why specified product or fabrication or installation cannot be provided, if applicable.
b. Coordination information, including a list of changes or modifications needed to other parts of the Work and to construction performed by Owner

and separate contractors that will be necessary to accommodate proposed substitution.

c. Product Data, including drawings and descriptions of products and fabrication and installation procedures.
d. 6”x12” Samples of each finish material in proposed pattern and color.
e. Certificates and qualification data.
f. Material test reports from a qualified testing agency indicating and interpreting test results for compliance with requirements indicated.
g. Cost information, including a proposal of change, if any, in the Contract Sum (not applicable for pre-bid Submittals).
h. Impact of substitution on construction schedule.
i. Contractor's certification that proposed substitution complies with requirements in the Contract Documents except as indicated in substitution request, is compatible with related materials, and is appropriate for applications indicated.
j. Contractor's waiver of rights to additional payment or time that may subsequently become necessary because of failure of proposed substitution to produce indicated results.

2. Project Manager’s Action: If necessary, Project Manager will request additional information or documentation for evaluation within seven (7) days of receipt of a request for substitution. Project Manager will notify Contractor of acceptance or rejection of proposed substitution within fifteen (15) days of receipt of request, or seven (7) days of receipt of additional information or documentation, whichever is later.

a. Forms of Acceptance: Change Order, Construction Change Directive, or Project Manager Supplemental Instructions for minor changes in the Work.
b. Use product specified if Project Manager does not issue a decision on use of a proposed substitution within time allocated.

1.5 QUALITY ASSURANCE

A. Compatibility of Substitutions: Investigate and document compatibility of proposed substitution with related products and materials. Engage qualified testing agency to perform compatibility tests recommended by manufacturers.

1.6 PROCEDURES

A. Coordination: Modify or adjust affected work as necessary to integrate work of the approved substitutions.

PART 2 - PRODUCTS (Not Used)

PART 3 - EXECUTION (Not Used)

END OF SECTION

SECTION 01700

EXECUTION REQUIREMENTS

PART 1 - GENERAL

1.1 RELATED DOCUMENTS

A. Drawings and general provisions of the Contract, including General and Supplementary Conditions and other Division 1 Specification Sections, apply to this Section.

1.2 SUMMARY

A. Section includes general administrative and procedural requirements governing execution of the Work including, but not limited to, the following:

1. Environmental concerns.
2. Installation of the Work.
3. Cutting and patching.
4. Progress cleaning.
5. Starting and adjusting.
6. Protection of installed construction.
7. Correction of the Work.

B. Related Sections:
1. Division 1 Sections “Summary of the Work”, “Project Record Documents”, or "Closeout Procedures", if included in Project Manual, for submitting closeout documents and final cleaning.

1.3 DEFINITIONS

A. Cutting: Removal of in-place construction necessary to permit installation or performance of other work.

B. Patching: Fitting and repair work required to restore construction to original conditions after installation of other work.

1.4 INFORMATIONAL SUBMITTALS

A. Cutting and Patching Plan: Submit plan describing procedures at least 10 days prior to the time cutting and patching will be performed. Include the following information:

1. Extent: Describe reason for and extent of each occurrence of cutting and patching.

2. Changes to In-Place Construction: Describe anticipated results. Include changes to structural elements and operating components as well as changes in building appearance and other significant visual elements.
3. Products: List of products to be used for patching and firms or entities that will perform patching work.
4. Dates: Indicate when cutting and patching will be performed.
5. Utilities and Mechanical and Electrical Systems: List services and systems that cutting and patching procedures will disturb or affect. List services and systems that will be relocated and those that will be temporarily out of service. Indicate how long services and systems will be disrupted. Prior approval of Utility outages is required. Notify Owner of intent at least 72 hours in advance.

1.5 QUALITY ASSURANCE

A. Cutting and Patching: Comply with requirements for and limitations on cutting and patching of construction elements.

PART 2 - PRODUCTS

2.1 MATERIALS

A. General: Comply with requirements specified in other Sections.

B. In-Place Materials: Use materials for patching identical to in-place materials. For exposed surfaces, use materials that visually match in-place adjacent surfaces to the fullest extent possible.

1. If identical materials are unavailable or cannot be used, use materials that, when installed, will provide a match acceptable to the Architect for the visual and functional performance of in-place materials.

PART 3 - EXECUTION

3.1 EXAMINATION

A. Existing Conditions: The existence and location of underground and other utilities and construction indicated as existing are not guaranteed. Before beginning work, investigate and verify the existence and location of underground utilities, mechanical and electrical systems, and other construction affecting the Work.

1. Before construction, verify the location and invert elevation at points of connection of sanitary sewer, storm sewer, and water-service piping; underground electrical services, and other utilities.

2. Furnish location data for work related to Project that must be performed by public utilities serving Project site.

B. Examination and Acceptance of Conditions: Before proceeding with each component of the Work, examine substrates, areas, and conditions, with Installer or Applicator present where indicated, for compliance with requirements for installation tolerances and other conditions affecting performance. Record observations.

1. Written Report: Where a written report listing conditions detrimental to performance of the Work is required by other Sections, include the following:

   a. Description of the Work.
   b. List of detrimental conditions, including substrates.
   c. List of unacceptable installation tolerances.
   d. Recommended corrections.

2. Verify compatibility with and suitability of substrates, including compatibility with existing finishes or primers.
3. Examine roughing-in for mechanical and electrical systems to verify actual locations of connections before equipment and fixture installation.
4. Examine walls, floors, and roofs for suitable conditions where products and systems are to be installed.
5. Proceed with installation only after unsatisfactory conditions have been corrected. Proceeding with the Work indicates acceptance of surfaces and conditions.

3.2 PREPARATION

A. Field Measurements: Take field measurements as required to fit the Work properly. Recheck measurements before installing each product. Where portions of the Work are indicated to fit to other construction, verify dimensions of other construction by field measurements before fabrication. Coordinate fabrication schedule with construction progress to avoid delaying the Work.

B. Space Requirements: Verify space requirements and dimensions of items shown diagrammatically on Drawings.

C. Review of Contract Documents and Field Conditions: Immediately on discovery of the need for clarification of the Contract Documents caused by differing field conditions outside the control of the Contractor, submit a request for information to Architect according to requirements in Division 1 Section "Project Management and Coordination."

D. Surface and Substrate Preparation: Comply with manufacturer's recommendations for preparation of substrates to receive subsequent work.

3.3 INSTALLATION

A. General: Locate the Work and components of the Work accurately, in correct alignment and elevation, as indicated.

1. Make vertical work plumb and make horizontal work level.
2. Where space is limited, install components to maximize space available for maintenance and ease of removal for replacement.
3. Conceal pipes, ducts, and wiring in finished areas, unless otherwise indicated.
4. Maintain minimum headroom clearance of 96 inches, but in no case shall the new piping be lower than the existing piping.

B. Comply with manufacturer's written instructions and recommendations for installing products in applications indicated.

C. Install products at the time and under conditions that will ensure the best possible results. Maintain conditions required for product performance until Substantial Completion.

D. Conduct construction operations so no part of the Work is subjected to damaging operations or loading in excess of that expected during normal conditions of occupancy.

E. Tools and Equipment: Do not use tools or equipment that produce harmful noise levels.

F. Templates: Obtain and distribute to the parties involved templates for work specified to be factory prepared and field installed. Check Shop Drawings of other work to confirm that adequate provisions are made for locating and installing products to comply with indicated requirements.

G. Attachment: Provide blocking and attachment plates and anchors and fasteners of adequate size and number to securely anchor each component in place, accurately located and aligned with other portions of the Work. Where size and type of attachments are not indicated, verify size and type required for load conditions.

1. Mounting Heights: Where mounting heights are not indicated, mount components at heights directed by Architect.
2. Allow for building movement, including thermal expansion and contraction.
3. Coordinate installation of anchorages. Furnish setting drawings, templates, and directions for installing anchorages, including sleeves, concrete inserts, anchor bolts, and items with integral anchors, that are to be embedded in concrete or masonry. Deliver such items to Project site in time for installation.

H. Joints: Make joints of uniform width. Where joint locations in exposed work are not indicated, arrange joints for the best visual effect. Fit exposed connections together to form hairline joints.

I. Hazardous Materials: Use products, cleaners, and installation materials that are not considered hazardous, and meet environmental requirements.

3.4 CUTTING AND PATCHING

A. Cutting and Patching, General: Employ skilled workers to perform cutting and patching. Proceed with cutting and patching at the earliest feasible time, and complete without delay.

1. Cut in-place construction to provide for installation of other components or performance of other construction, and subsequently patch as required to restore surfaces to their original condition.

B. Temporary Support: Provide temporary support of work to be cut.

C. Protection: Protect in-place construction during cutting and patching to prevent damage. Provide protection from adverse weather conditions for portions of Project that might be exposed during cutting and patching operations.

D. Adjacent Occupied Areas: Where interference with use of adjoining areas or interruption of free passage to adjoining areas is unavoidable, coordinate cutting and patching in accordance with requirements of Division 1 Section "Summary."

E. Existing Utility Services and Mechanical/Electrical Systems: Where existing services/systems are required to be removed, relocated, or abandoned, bypass such services/systems before cutting to prevent interruption to occupied areas.

F. Cutting: Cut in-place construction by sawing, drilling, breaking, chipping, grinding, and similar operations, including excavation, using methods least likely to damage elements retained or adjoining construction. If possible, review proposed procedures with original Installer; comply with original Installer's written recommendations.

1. In general, use hand or small power tools designed for sawing and grinding, not hammering and chopping. Cut holes and slots neatly to minimum size required, and with minimum disturbance of adjacent surfaces. Temporarily cover openings when not in use.
2. Finished Surfaces: Cut or drill from the exposed or finished side into concealed surfaces.
3. Concrete and Masonry: Cut using a cutting machine, such as an abrasive saw or a diamond-core drill.
4. Mechanical and Electrical Services: Cut off pipe or conduit in walls or partitions to be removed. Cap, valve, or plug and seal remaining portion of pipe or conduit to prevent entrance of moisture or other foreign matter after cutting.
5. Proceed with patching after construction operations requiring cutting are complete.

G. Patching: Patch construction by filling, repairing, refinishing, closing up, and similar operations following performance of other work. Patch with durable seams that are as invisible as practicable. Provide materials and comply with installation requirements specified in other Sections, where applicable.

1. Inspection: Where feasible, test and inspect patched areas after completion to demonstrate physical integrity of installation.

2. Exposed Finishes: Restore exposed finishes of patched areas and extend finish restoration into retained adjoining construction in a manner that will minimize evidence of patching and refinishing.

    a. Clean piping, conduit, and similar features before applying paint or other finishing materials.
    b. Restore damaged pipe covering to its original condition.

H. Cleaning: Clean areas and spaces where cutting and patching are performed. Remove paint, mortar, oils, putty, and similar materials from adjacent finished surfaces.

3.5 PROGRESS CLEANING

A. General: Clean Project site and work areas daily, including common areas. Enforce requirements strictly. Dispose of materials lawfully.

1. Comply with requirements in NFPA 241 for removal of combustible waste materials and debris.
2. Do not hold waste materials more than seven days during normal weather or three days if the temperature is expected to rise above 80 deg F (27 deg C).
3. Containerize hazardous and unsanitary waste materials separately from other waste. Mark containers appropriately and dispose of legally, according to regulations.

    a. Utilize containers intended for holding waste materials of type to be stored.

4. Coordinate progress cleaning for joint-use areas where more than one installer has worked.

B. Site: Maintain Project site free of waste materials and debris.

C. Work Areas: Clean areas where work is in progress to the level of cleanliness necessary for proper execution of the Work.

1. Remove liquid spills promptly.
2. Where dust would impair proper execution of the Work, broom-clean or vacuum the entire work area, as appropriate.

D. Work installed: Keep installed work clean. Clean installed surfaces according to written instructions of manufacturer or fabricator of product installed, using only cleaning materials specifically recommended. If specific cleaning materials are not recommended, use cleaning materials that are not hazardous to health or property and that will not damage exposed surfaces.

E. Exposed Surfaces in Finished Areas: Clean exposed surfaces and protect as necessary to ensure freedom from damage and deterioration at time of Substantial Completion.

F. Waste Disposal: Do not bury or burn waste materials on-site. Do not wash waste materials down sewers or into waterways.

G. During handling and installation, clean and protect construction in progress and adjoining materials already in place. Apply protective covering where required to ensure protection from damage or deterioration at Substantial Completion.

H. Clean completed construction as frequently as necessary through the remainder of the construction period.

3.6 STARTING AND ADJUSTING

A. Coordinate startup and adjusting of equipment and operating components with requirements in other Division 2 -16 Sections."

B. Start equipment and operating components to confirm proper operation. Remove malfunctioning units, replace with new units, and retest.

C. Adjust equipment for proper operation. Adjust operating components for proper operation without binding.

D. Test each piece of equipment to verify proper operation. Test and adjust controls and safeties. Replace damaged and malfunctioning controls and equipment.

E. Manufacturer's Field Service: Comply with qualification requirements in other Division 2-16 Sections.

3.7 PROTECTION OF INSTALLED CONSTRUCTION

A. Provide final protection and maintain conditions that ensure installed Work is without damage or deterioration at time of Substantial Completion.

B. Comply with manufacturer's written instructions for temperature and relative humidity.

3.8 CORRECTION OF THE WORK

A. Repair or remove and replace defective construction. Restore damaged substrates and finishes.

1. Repairing includes replacing defective parts, refinishing damaged surfaces, touching up with matching materials, and properly adjusting operating equipment.

B. Restore permanent facilities used during construction to their specified condition.

C. Remove and replace damaged surfaces that are exposed to view if surfaces cannot be repaired without visible evidence of repair.

D. Repair components that do not operate properly. Remove and replace operating components that cannot be repaired.

E. Remove and replace chipped, scratched, and broken glass or reflective surfaces.

3.9 ENVIRONMENTAL CONCERNS

1. Provide protection and conduct construction in ways that comply with environmental regulations and that minimize possible air, waterway, and subsoil contamination or pollution or other undesirable effects.

3.10 STORMWATER CONTROL AND DISCHARGE

1. Comply with City of Mobile and Alabama Department of Environmental Management requirements. Pay particular attention to Water Regulations and Allowable Discharges.

2. See City of Mobile Code, Chapter 17, Storm Water Management and Flood Control.

3. Obtain any necessary permits that may be required due to discharges.

END OF SECTION

SECTION 01710

CLOSEOUT PROCEDURES

PART 1 - GENERAL

1.1 RELATED DOCUMENTS

A. Drawings and general provisions of the Contract, including General and Supplementary Conditions and other Division 01 Specification Sections, apply to this Section.

1.2 SUMMARY

A. Section includes administrative and procedural requirements for contract closeout, including, but not limited to, the following:

1. Substantial Completion procedures.
2. Final completion procedures.
3. Warranties.
4. Final cleaning.
5. Repair of the Work.

1.3 ACTION SUBMITTALS

A. Product Data: For each type of cleaning agent.

B. Contractor's List of Incomplete Items: Initial submittal at Substantial Completion.

C. Certified List of Incomplete Items: Final submittal at final completion.

1.4 CLOSEOUT SUBMITTALS

A. Certificates of Release: From authorities having jurisdiction.

B. Certificate of Insurance: For continuing coverage.

1.5 MAINTENANCE MATERIAL SUBMITTALS

A. Schedule of Maintenance Material Items: For maintenance material submittal items specified in other Sections.

1.6 SUBSTANTIAL COMPLETION PROCEDURES

A. Contractor's List of Incomplete Items: Prepare and submit a list of items to be completed and corrected (Contractor's punch list), indicating the value of each item on the list and reasons why the Work is incomplete.

B. Submittals Prior to Substantial Completion: Complete the following a minimum of 10 days prior to requesting inspection for determining date of Substantial Completion. List items below that are incomplete at time of request.

1. Certificates of Release: Obtain and submit releases from authorities having jurisdiction permitting Owner unrestricted use of the Work and access to services and utilities. Include occupancy permits, operating certificates, and similar releases.
2. Submit closeout submittals specified in other Division 01 Sections, including project record documents, operation and maintenance manuals, damage or settlement surveys, property surveys, and similar final record information.
3. Submit closeout submittals specified in individual Sections, including specific warranties, workmanship bonds, maintenance service agreements, final certifications, and similar documents.
4. Submit maintenance material submittals specified in individual Sections, including tools, spare parts, extra materials, and similar items, and deliver to location designated by Architect. Label with manufacturer's name and model number.

    a. Schedule of Maintenance Material Items: Prepare and submit schedule of maintenance material submittal items, including name and quantity of each item and name and number of related Specification Section. Obtain Architect’s signature for receipt of submittals.
5. Submit testing, adjusting, and balancing records.
6. Submit changeover information related to Owner's occupancy, use, operation, and maintenance.

C. Procedures Prior to Substantial Completion: Complete the following a minimum of 10 days prior to requesting inspection for determining date of Substantial Completion. List items below that are incomplete at time of request.

1. Advise Owner of pending insurance changeover requirements.
2. Make final changeover of permanent locks and deliver keys to Owner. Advise Owner's personnel of changeover in security provisions.
3. Complete startup and testing of systems and equipment.
4. Perform preventive maintenance on equipment used prior to Substantial Completion.
5. Instruct Owner's personnel in operation, adjustment, and maintenance of products, equipment, and systems.
6. Advise Owner of changeover in utility services.
7. Terminate and remove temporary facilities from Project site, along with mockups, construction tools, and similar elements.
8. Complete final cleaning requirements.

9. Touch up paint and otherwise repair and restore marred exposed finishes to eliminate visual defects.

D. Inspection: Submit a written request for inspection to determine Substantial Completion a minimum of 10 days prior to date the Work will be completed and ready for final inspection and tests. On receipt of request, Architect will either proceed with inspection or notify Contractor of unfulfilled requirements. Architect will prepare the Certificate of Substantial Completion after inspection or will notify Contractor of items, either on Contractor's list or additional items identified by Architect, that must be completed or corrected before certificate will be issued.

1. Request reinspection when the Work identified in previous inspections as incomplete is completed or corrected.
2. Results of completed inspection will form the basis of requirements for final completion.

1.7 FINAL COMPLETION PROCEDURES

A. Submittals Prior to Final Completion: Before requesting final inspection for determining final completion, complete the following:

1. Certified List of Incomplete Items: Submit certified copy of Architect's Substantial Completion inspection list of items to be completed or corrected (punch list), endorsed and dated by Architect. Certified copy of the list shall state that each item has been completed or otherwise resolved for acceptance.
2. Certificate of Insurance: Submit evidence of final, continuing insurance coverage complying with insurance requirements.
3. Submit final completion photographic documentation.

B. Inspection: Submit a written request for final inspection to determine acceptance a minimum of 10 days prior to date the work will be completed and ready for final inspection and tests. On receipt of request, Architect will either proceed with inspection or notify Contractor of unfulfilled requirements. Architect will prepare a final Certificate for Payment after inspection or will notify Contractor of construction that must be completed or corrected before certificate will be issued.

1. Request reinspection when the Work identified in previous inspections as incomplete is completed or corrected.

1.8 LIST OF INCOMPLETE ITEMS (PUNCH LIST)

A. Organization of List: Include name and identification of each space and area affected by construction operations for incomplete items and items needing correction including, if necessary, areas disturbed by Contractor that are outside the limits of construction.
1. Organize items applying to each space by major element, including categories for ceiling, individual walls, floors, equipment, and building systems.
2. Include the following information at the top of each page:

a. Project name.
b. Date.
c. Name of Architect.
d. Name of Contractor.
e. Page number.

3. Submit list of incomplete items in the following format:

a. MS Excel electronic file. Architect will return annotated file.
b. PDF electronic file. Architect will return annotated file.

1.9 SUBMITTAL OF PROJECT WARRANTIES

A. Time of Submittal: Submit written warranties on request of Architect for designated portions of the Work where warranties are indicated to commence on dates other than date of Substantial Completion, or when delay in submittal of warranties might limit Owner's rights under warranty.

B. Organize warranty documents into an orderly sequence based on the table of contents of Project Manual.

C. Warranty Electronic File: Provide warranties and bonds in PDF format. Assemble complete warranty and bond submittal package into a single electronic PDF file with bookmarks enabling navigation to each item. Provide bookmarked table of contents at beginning of document.

D. Provide additional copies of each warranty to include in operation and maintenance manuals.

PART 2 - PRODUCTS

2.1 MATERIALS

A. Cleaning Agents: Use cleaning materials and agents recommended by manufacturer or fabricator of the surface to be cleaned. Do not use cleaning agents that are potentially hazardous to health or property or that might damage finished surfaces.

1. Use cleaning products that comply with Green Seal's GS-37, or if GS-37 is not applicable, use products that comply with the California Code of Regulations maximum allowable VOC levels.

PART 3 - EXECUTION

3.1 FINAL CLEANING

A. General: Perform final cleaning. Conduct cleaning and waste-removal operations to comply with local laws and ordinances and Federal and local environmental and antipollution regulations.

B. Cleaning: Employ experienced workers or professional cleaners for final cleaning. Clean each surface or unit to condition expected in an average commercial building cleaning and maintenance program. Comply with manufacturer's written instructions.

1. Complete the following cleaning operations before requesting inspection for certification of Substantial Completion for entire Project or for a designated portion of Project:

a. Clean Project site, and grounds, in areas disturbed by construction and delivery activities, of rubbish, waste material, litter, and other foreign substances.
b. Sweep paved areas broom clean. Remove petrochemical spills, stains, and other foreign deposits.
c. Remove tools, construction equipment, machinery, and surplus material from Project site.
d. Clean interior hard-surfaced finishes to a dirt-free condition, free of stains, films, and similar foreign substances. Avoid disturbing natural weathering of exterior surfaces. Restore reflective surfaces to their original condition.
e. Remove debris and surface dust from limited access spaces, including roofs, plenums, shafts, trenches, equipment vaults, manholes, attics, and similar spaces.
f. Sweep concrete floors broom clean in unoccupied spaces.
g. Vacuum carpet and similar soft surfaces, removing debris and excess nap; clean according to manufacturer's recommendations if visible soil or stains remain.
h. Clean transparent materials, including mirrors and glass in doors and windows. Remove glazing compounds and other noticeable, vision-obscuring materials. Polish mirrors and glass, taking care not to scratch surfaces.
i. Remove labels that are not permanent.
j. Wipe surfaces of mechanical and electrical equipment, and similar equipment. Remove excess lubrication, paint and mortar droppings, and other foreign substances.
k. Clean plumbing fixtures to a sanitary condition, free of stains, including stains resulting from water exposure.
l. Replace disposable air filters and clean permanent air filters. Clean exposed surfaces of diffusers, registers, and grills.
m. Clean ducts, blowers, and coils if units were operated without filters during construction or that display contamination with particulate matter on inspection.

n. Clean light fixtures, lamps, globes, and reflectors to function with full efficiency.
o. Leave Project clean and ready for occupancy.

3.2 REPAIR OF THE WORK

A. Complete repair and restoration operations before requesting inspection for determination of Substantial Completion.

B. Repair, or remove and replace, defective construction. Repairing includes replacing defective parts, refinishing damaged surfaces, touching up with matching materials, and properly adjusting operating equipment. Where damaged or worn items cannot be repaired or restored, provide replacements. Remove and replace operating components that cannot be repaired. Restore damaged construction and permanent facilities used during construction to specified condition.

1. Remove and replace chipped, scratched, and broken glass, reflective surfaces, and other damaged transparent materials.
2. Touch up and otherwise repair and restore marred or exposed finishes and surfaces. Replace finishes and surfaces that that already show evidence of repair or restoration.

a. Do not paint over "UL" and other required labels and identification, including mechanical and electrical nameplates. Remove paint applied to required labels and identification.

3. Replace parts subject to operating conditions during construction that may impede operation or reduce longevity.
4. Replace burned-out bulbs, bulbs noticeably dimmed by hours of use, and defective and noisy starters in fluorescent and mercury vapor fixtures to comply with requirements for new fixtures.

END OF SECTION

SECTION 01731

CUTTING AND PATCHING

PART 1 - GENERAL

1.1 SUMMARY

A. This section includes procedural requirements for cutting and patching.

B. Definition: Cutting and patching includes cutting into existing construction to provide for the installation or performance of other work and subsequent fitting and repair required to restore surfaces to their original condition.

C. Operational Limitations: Do not cut and patch operating elements, safety related systems, or related components in a manner that would result in reducing their capacity to perform as intended. Do not cut and patch operating elements, safety related systems or related components in a manner that would result in increased maintenance or decreased operational life or safety.

PART 2 - PRODUCTS

2.1 MATERIALS

A. Use materials identical to existing materials to the maximum extent available.

B. For exposed surfaces, use materials that visually match existing adjacent surfaces to the fullest extent possible.

C. Use materials whose installed performance will equal or surpass that of existing materials.

PART 3 - EXECUTION

3.1 INSPECTION

A. Before cutting, examine surfaces to be cut and patched and conditions under which cutting and patching is to be performed. If unsafe or unsatisfactory conditions are encountered, take corrective action before proceeding.

B. Before proceeding with cutting and patching involving two or more trades, meet at the Project site with the entities providing or affected by the cutting and patching. Review areas of potential interference and conflict. Coordinate procedures and resolve potential conflicts before proceeding.

3.2 PREPARATION

A. Provide temporary support of work to be cut.

B. Protect existing conditions during cutting and patching to prevent damage.

C. Bypass in-service existing pipe, conduit, or ductwork scheduled to be removed or relocated before cutting.

3.3 PERFORMANCE

A. Employ skilled workmen to perform cutting and patching. Proceed with cutting and patching at the earliest feasible time and complete without delay.

B. Cutting: Cut existing construction using methods least likely to damage elements retained and adjoining construction. Where possible, review proposed procedures with the original installer and comply with the original installer's recommendations.

1. In general, use hand or small power tools designed for sawing or grinding, not for hammering and chopping.
2. Cut through concrete and masonry using a cutting machine, such as a Carborundum saw or a diamond-core drill.

C. Patching: Patch with durable seams that are as invisible as possible. Comply with specified tolerances.

1. Where feasible, inspect and test patched areas to demonstrate integrity of the installation.
2. Restore exposed finishes of patched areas and extend finish restoration into adjoining construction in a manner that will eliminate evidence of patching and refinishing.

3.4 CLEANING

A. Clean areas and spaces where cutting and patching are performed. Completely remove paint, mortar, oils, putty, and similar items.

END OF SECTION

SECTION 017823

OPERATION AND MAINTENANCE DATA

PART 1 - GENERAL

1.1 SUMMARY

A. This Section includes administrative and procedural requirements for preparing operation and maintenance manuals, including the following:

1. Operation manuals for systems, subsystems, and equipment.
2. Maintenance manuals for the care and maintenance of products, materials, and finishes, systems and equipment.

B. See Divisions 01 through 16 Sections for specific operation and maintenance manual requirements for the Work in those Sections.

1.2 SUBMITTALS

A. Manual: Submit (1) PDF copy of each manual in final form at least 15 days before final inspection. Architect will return copy with comments within 10 days after final inspection.

1. Correct or modify each manual to comply with Architect's comments. Submit one (1) PDF copy within 10 days of receipt of Architect's comments.

PART 2 - PRODUCTS

2.1 MANUALS, GENERAL

A. Organization: Unless otherwise indicated, organize each manual into a separate section for each system and subsystem, and a separate section for each piece of equipment not part of a system. Each manual shall contain a title page, table of contents, and manual contents.

B. Title Page: Enclose title page in transparent plastic sleeve. Include the following information:

1. Subject matter included in manual.
2. Name and address of Project.
3. Name and address of Owner.
4. Date of submittal.
5. Name, address, and telephone number of Contractor.
6. Name and address of Architect and Engineer.

7. Cross-reference to related systems in other operation and maintenance manuals.

C. Table of Contents: List each product included in manual, identified by product name, indexed to the content of the volume, and cross-referenced to Specification Section number in Project Manual.

D. Manual Contents: Provide (1) PDF copy. Arrange contents alphabetically by system, subsystem, and equipment. If possible, assemble instructions for subsystems, equipment, and components of one system into a single binder.

2.2 OPERATION MANUALS

A. Content: In addition to requirements in this Section, include operation data required in individual Specification Sections and equipment descriptions, operating standards, operating procedures, operating logs, wiring and control diagrams, and license requirements.

B. Descriptions: Include the following:

1. Product name and model number.
2. Manufacturer's name.
3. Equipment identification with serial number of each component.
4. Equipment function.
5. Operating characteristics.
6. Limiting conditions.
7. Performance curves.
8. Engineering data and tests.
9. Complete nomenclature and number of replacement parts.

C. Operating Procedures: Include start-up, break-in, and control procedures; stopping and normal shutdown instructions; routine, normal, seasonal, and weekend operating instructions; and required sequences for electric or electronic systems.

D. Systems and Equipment Controls: Describe the sequence of operation, and diagram controls as installed.

E. Piped Systems: Diagram piping as installed, and identify color-coding where required for identification.

2.3 PRODUCT MAINTENANCE MANUAL

A. Content: Organize manual into a separate section for each product, material, and finish. Include source information, product information, maintenance procedures, repair materials and sources, and warranties and bonds, as described below.

B. Source Information: List each product included in manual, identified by product name and arranged to match manual's table of contents. For each product, list name,

address, and telephone number of Installer or supplier and maintenance service agent, and cross-reference Specification Section number and title in Project Manual.

C. Product Information: Include the following, as applicable:

1. Product name and model number.
2. Manufacturer's name.
3. Color, pattern, and texture.
4. Material and chemical composition.
5. Reordering information for specially manufactured products.

D. Maintenance Procedures: Include manufacturer's written recommendations and inspection procedures, types of cleaning agents, methods of cleaning, schedule for cleaning and maintenance, and repair instructions.

E. Repair Materials and Sources: Include lists of materials and local sources of materials and related services.

F. Warranties and Bonds: Include copies of warranties and bonds and lists of circumstances and conditions that would affect validity of warranties or bonds.

2.4 SYSTEMS AND EQUIPMENT MAINTENANCE MANUAL

A. Content: For each system, subsystem, and piece of equipment not part of a system, include source information, manufacturers' maintenance documentation, maintenance procedures, maintenance and service schedules, spare parts list and source information, maintenance service contracts, and warranty and bond information, as described below.

B. Source Information: List each system, subsystem, and piece of equipment included in manual, identified by product name and arranged to match manual's table of contents. For each product, list name, address, and telephone number of Installer or supplier and maintenance service agent, and cross-reference Specification Section number and title in Project Manual.

C. Manufacturers' Maintenance Documentation: Manufacturers' maintenance documentation including maintenance instructions, drawings and diagrams for maintenance, nomenclature of parts and components, and recommended spare parts for each component part or piece of equipment:

D. Maintenance Procedures: Include test and inspection instructions, troubleshooting guide, disassembly instructions, and adjusting instructions, and demonstration and training videotape if available, that detail essential maintenance procedures.

E. Submit demonstration and training video for all lighting control systems.

F. Maintenance and Service Schedules: Include service and lubrication requirements, list of required lubricants for equipment, and separate schedules for preventive and routine maintenance and service with standard time allotment.

G. Spare Parts List and Source Information: Include lists of replacement and repair parts, with parts identified and cross-referenced to manufacturers' maintenance documentation and local sources of maintenance materials and related services.

H. Maintenance Service Contracts: Include copies of maintenance agreements with name and telephone number of service agent.

I. Warranties and Bonds: Include copies of warranties and bonds and lists of circumstances and conditions that would affect validity of warranties or bonds.

PART 3 - EXECUTION

3.1 MANUAL PREPARATION

A. Product Maintenance Manual: Assemble a complete set of maintenance data indicating care and maintenance of each product, material, and finish incorporated into the Work.

B. Operation and Maintenance Manuals: Assemble a complete set of operation and maintenance data indicating operation and maintenance of each system, subsystem, and piece of equipment not part of a system.

C. Manufacturers' Data: Where manuals contain manufacturers' standard printed data, include only sheets pertinent to product or component installed. Mark each sheet to identify each product or component incorporated into the Work. If data include more than one item in a tabular format, identify each item using appropriate references from the Contract Documents. Identify data applicable to the Work and delete references to information not applicable.

D. Drawings: Prepare drawings supplementing manufacturers' printed data to illustrate the relationship of component parts of equipment and systems and to illustrate control sequence and flow diagrams. Coordinate these drawings with information contained in Record Drawings to ensure correct illustration of completed installation.

1. Do not use original Project Record Documents as part of operation and maintenance manuals.

E. Comply with Division 01 Section "Closeout Procedures" for schedule for submitting operation and maintenance documentation.

END OF SECTION 017823

SECTION 017839

PROJECT RECORD DOCUMENTS

PART 1 - GENERAL

1.1 SUMMARY

A. This Section includes administrative and procedural requirements for Project Record Documents, including the following:

1. Record Drawings.
2. Record Specifications.
3. Record Product Data.

B. See Division 01 Section "Operation and Maintenance Data" for operation and maintenance manual requirements.

C. See Divisions 01 through 16 Sections for specific requirements for Project Record Documents of the Work in those Sections.

1.2 SUBMITTALS

A. Record Drawings: Comply with the following:

1. Number of Copies: Submit copies of Record Drawings as follows:
   a. Final Submittal: Submit (1) PDF copy of marked-up Record Prints, showing all dimensional locations, materials changes, any changes via addendum or change order. Pay particular attention to noting underground utilities.

B. Record Specifications: Submit (1) PDF copy of Project's Specifications, including addenda and contract modifications.

C. Record Product Data: Submit (1) PDF copy of each Product Data submittal.

PART 2 - PRODUCTS

2.1 RECORD DRAWINGS

A. Record Prints: Maintain one set of blue- or black-line white prints of the Contract Drawings and Shop Drawings.

1. Preparation: Mark Record Prints to show the actual installation where installation varies from that shown originally. Require individual or entity who obtained

record data, whether individual or entity is Installer, subcontractor, or similar entity, to prepare the marked-up Record Prints.

a. Give particular attention to information on concealed elements that would be difficult to identify or measure and record later.
b. Record data as soon as possible after obtaining it. Record and check the markup before enclosing concealed installations.

2. Mark the Contract Drawings or Shop Drawings, whichever is most capable of showing actual physical conditions, completely and accurately. If Shop Drawings are marked, show cross-reference on the Contract Drawings.
3. Mark record sets with erasable, red-colored pencil. Use other colors to distinguish between changes for different categories of the Work at same location.
4. Note Construction Change Directive numbers, alternate numbers, Change Order numbers, and similar identification, where applicable.

B. Format: Identify and date each Record Drawing; include the designation "PROJECT RECORD DRAWING" in a prominent location.

1. Record Prints: Organize Record Prints and newly prepared Record Drawings into manageable sets. Bind each set with durable paper cover sheets. Include identification on cover sheets.
2. Record Transparencies: Organize into unbound sets matching Record Prints. Place transparencies in durable tube-type drawing containers with end caps. Mark end cap of each container with identification. If container does not include a complete set, identify Drawings included.
3. Record CAD Drawings: Organize CAD information into separate electronic files that correspond to each sheet of the Contract Drawings. Name each file with the sheet identification. Include identification in each CAD file.
4. Identification: As follows:

a. Project name.
b. Date.
c. Designation "PROJECT RECORD DRAWINGS."
d. Name of Architect and Engineer.
e. Name of Contractor.

2.2 RECORD SPECIFICATIONS

A. Preparation: Mark Specifications to indicate the actual product installation where installation varies from that indicated in Specifications, addenda, and contract modifications.

1. Give particular attention to information on concealed products and installations that cannot be readily identified and recorded later.
2. Mark copy with the proprietary name and model number of products, materials, and equipment furnished, including substitutions and product options selected.

3. Record the name of manufacturer, supplier, Installer, and other information necessary to provide a record of selections made.
4. Note related Change Orders, Record Product Data, and Record Drawings where applicable.

2.3 RECORD PRODUCT DATA

A. Preparation: Mark Product Data to indicate the actual product installation where installation varies substantially from that indicated in Product Data submittal.

1. Give particular attention to information on concealed products and installations that cannot be readily identified and recorded later.
2. Include significant changes in the product delivered to Project site and changes in manufacturer's written instructions for installation.
3. Note related Change Orders, Record Specifications, and Record Drawings where applicable.

2.4 MISCELLANEOUS RECORD SUBMITTALS

A. Assemble miscellaneous records required by other Specification Sections for miscellaneous record keeping and submittal in connection with actual performance of the Work. Bind or file miscellaneous records and identify each, ready for continued use and reference.

B. Completed Test Reports.

PART 3 - EXECUTION

3.1 RECORDING AND MAINTENANCE

A. Recording: Maintain one copy of each submittal during the construction period for Project Record Document purposes. Post changes and modifications to Project Record Documents as they occur; do not wait until the end of Project.

B. Maintenance of Record Documents and Samples: Store Record Documents and Samples in the field office apart from the Contract Documents used for construction. Do not use Project Record Documents for construction purposes. Maintain Record Documents in good order and in a clean, dry, legible condition, protected from deterioration and loss. Provide access to Project Record Documents for Architect's reference during normal working hours.

END OF SECTION

DRAWINGS

CITY OF MOBILE - TRIMMIER PARK
LIGHT UPGRADES - PR#068-26

FOR

the City of
Mobile, Alabama

BY

JAGUAR CONSULTING
CHRISTINA MARIE P.E.
PE 50660 - ECA 50377
C: (251) 455-9189
Christy@JagCon.org

INDEX OF DRAWINGS

DRAWING #	DRAWING DESCRIPTION:
T101	TITLE SHEET
E101	ELECTRICAL LEGEND & ABBREVIATIONS & SPECIFICATIONS
E201	ELECTRICAL OVERALL SITE PLAN
E301	ELECTRICAL ONE LINE DIAGRAM & LIGHTING CONTROL WIRING DIAGRAM
E401	ELECTRICAL SCHEDULES & ELEVATIONS
S-1	STRUCTURAL SCOREBOARD ELEVATIONS
S-2	STRUCTURAL SCOREBOARD FOUNDATION DETAILS

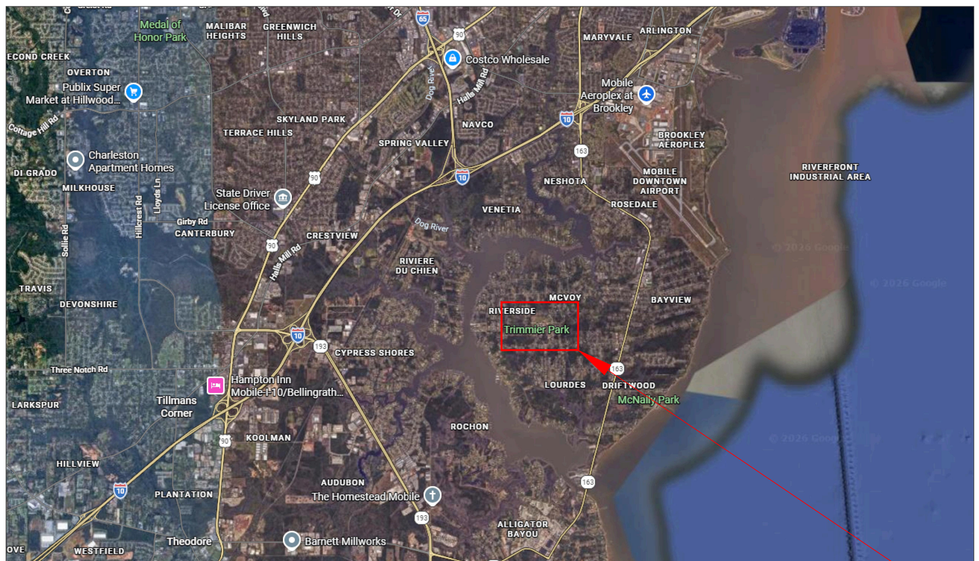

N

1 OVERALL SITE VICINITY MAP

SUMMARY OF WORK

BY CONTRACTOR:

- INSTALLATION OF A NEW ELECTRICAL SERVICE PEDESTAL, ELECTRICAL EQUIPMENT, CONDUIT, WIRING, ETC.
- UPGRADE THE EXISTING TRIMMIER PARK FOOTBALL FIELD LIGHTING TO A NEW MUSCO LIGHTING SYSTEM.
- INSTALLATION OF A NEW OWNER-PROVIDED NEVCO SCOREBOARD.

THE ELECTRICAL CONTRACTOR IS TO PROVIDE ALL NECESSARY EQUIPMENT, RACEWAYS, ETC., FOR A COMPLETE SYSTEM, UNLESS OTHERWISE NOTED.

BY OWNER:

ALL NEW MUSCO LIGHTING EQUIPMENT, FIXTURES, POLES, ETC., AND THE NEW SCOREBOARD ARE TO BE PROVIDED BY THE OWNER AND INSTALLED BY THE ELECTRICAL CONTRACTOR.

JAGUAR CONSULTING
CHRISTINA MARIE P.E.
PE 50660 - ECA 50377
C: (251) 455-9189
Christy@JagCon.org

ALABAMA LICENSED No. 50660 PROFESSIONAL ENGINEER CHRISTINA MARIE

05/20/2026

NUMBER REVISION	REVISION DESCRIPTION

CITY OF MOBILE - TRIMMIER PARK
LIGHT UPGRADES - PR#068-26
MOBILE, ALABAMA

DESIGNED BY: TMM
DRAWN BY: TMM
CHECKED BY: CM
DATE: 05-20-2026

SHEET TITLE: TITLE SHEET

SHEET: T101

ABBREVIATIONS

A	AMPS
AC	ABOVE COUNTER
AFF	ABOVE FINISHED FLOOR
AFG	ABOVE FINISHED GRADE
AHU	AIR HANDLING UNIT
AL	ALUMINUM
ARCH	ARCHITECT OR ARCHITECTURAL
ATS	AUTOMATIC TRANSFER SWITCH
AWG	AMERICAN WIRE GAUGE
BAS	BUILDING AUTOMATION SYSTEM
BFG	BELOW FINISHED GRADE
BKR	CIRCUIT BREAKER
BLDG	BUILDING
C	CONDUIT
C/B	CIRCUIT BREAKER
CKT	CIRCUIT
CT	CURRENT TRANSFORMER
CU	COPPER
DDC	DIRECT DIGITAL CONTROL
DEMO	DEMOLISH
ELEC	ELECTRICAL
EMGB	ELECTRICAL MAIN GROUNDING BUSBAR
EWC	ELECTRIC WATER COOLER
EMT	ELECTRICAL METALLIC TUBING
EQUIP	EQUIPMENT
FMC	FLEXIBLE METAL CONDUIT
FA	FIRE ALARM
FACP	FIRE ALARM SYSTEM CONTROL PANEL
FLA	FULL LOAD AMPS
GFCI	ROUND FAULT CIRCUIT INTERRUPTER
GND	GROUND
GEC	GROUNDING ELECTRODE CONDUCTOR
HH	HANDHOLE
HOA	HAND-OFF-AUTOMATIC
HP	HEAT PUMP OR HORSEPOWER
HVAC	HEATING, VENTILATION & AIR-CONDITIONING
JB	JUNCTION BOX
kAIC	KILO-AMPERE INTERRUPTING CAPABILITY
kCMIL	THOUSAND CIRCULAR MILS
LTG	LIGHTING
LFMC	LIQUID TIGHT FLEXIBLE METAL CONDUIT
LV	LOW VOLTAGE
MAX	MAXIMUM
MCA	MINIMUM CIRCUIT AMPACITY
MCC	MOTOR CONTROL CENTER
MCM	THOUSAND CIRCULAR MILS
MH	MANHOLE
MISC	MISCELLANEOUS
MLO	MAIN LUGS ONLY
MNT	MOUNTING HEIGHT
MTG	MOUNTING
MTS	MANUAL TRANSFER SWITCH
MV	MEDIUM VOLTAGE
N1	NEMA 1
N3R	NEMA 3R
N/A	NOT APPLICABLE
NEC	NATIONAL ELECTRICAL CODE
NEU	NEUTRAL
NM	NON-METALLIC
OCPD	OVERCURRENT PROTECTION DEVICE
OHE	OVERHEAD ELECTRIC
PNL	PANELBOARD
PWR	POWER
REC	RECEPTACLE
REQ	REQUIRED
RM	ROOM
RGS	RIGID GALVANIZED STEEL CONDUIT
RNC	RIGID NON-METALLIC CONDUIT
SA	SURGE ARRESTER
SCA	SHORT CIRCUIT AMPS
SER	SERVICE ENTRANCE RATED
SPEC	SPECIFICATION
SWBD	SWITCHBOARD
SWGR	SWITCHGEAR
THHN	THERMOPLASTIC HIGH HEAT-RESISTANT NYLON-COATED
THWN	THERMOPLASTIC HEAT AND WATER-RESISTANT NYLON
TVSS	TRANSIENT VOLTAGE SURGE SUPPRESSION
TYP	TYPICAL
UG	UNDERGROUND
UL	UNDERWRITERS' LABORATORIES
UPS	UNINTERRUPTIBLE POWER SUPPLY
V	VOLT
VA	VOLT-AMPERES
VAR	VOLT-AMPERES REACTIVE
VAV	VARIABLE AIR VOLUME UNIT
W	WATTS
WAO	WORK AREA OUTLET
WP	WEATHERPROOF
XFMR	TRANSFORMER
ϕ	PHASE
72°	DEGREES
Δ	DELTA
Ω	OHMS

ELECTRICAL SPECIFICATIONS

1. GENERAL ELECTRICAL:
   - 1.1. THE CONTRACTOR SHALL FURNISH ALL LABOR, MATERIALS AND EQUIPMENT NECESSARY FOR THE INSTALLATION OF A COMPLETE ELECTRICAL SYSTEM AS INDICATED WITHIN THESE DRAWINGS. ALL WORK SHALL BE INSTALLED IN STRICT ACCORDANCE WITH ALL APPLICABLE CODES AND ORDINANCES AND WITH MANUFACTURER'S RECOMMENDATIONS.
   - 1.2. THE CONTRACTOR SHALL CAREFULLY EXAMINE THE STRUCTURAL AND ELECTRICAL DRAWINGS PRIOR TO SUBMITTING HIS BID. THE CONTRACTOR WILL BE REQUIRED TO FURNISH, INSTALL AND CONNECT ALL ITEMS AS INDICATED ON THE DRAWINGS, UNLESS OTHERWISE NOTED.
   - 1.3. THE ENGINEER SHALL BE NOTIFIED OF ANY CONFLICTS, OR INTERFERENCES THAT OCCUR BETWEEN INDIVIDUAL DRAWINGS.
   - 1.4. ALL MATERIALS AND EQUIPMENT SHALL BE INSTALLED IN A NEAT, FIRST CLASS, WORKMANLIKE MANNER, TO THE APPROVAL OF THE ARCHITECT/ENGINEER AND GOVERNING AUTHORITIES.
   - 1.5. IN ADDITION TO THE MANUFACTURERS STANDARD GUARANTEES, THE CONTRACTOR SHALL GUARANTEE ALL MATERIALS, EQUIPMENT AND WORKMANSHIP AGAINST DEFECTS FOR ONE YEAR FROM THE DATE OF FINAL ACCEPTANCE, AND SHALL CORRECT ANY DEFECTS AT NO ADDITIONAL COST TO THE OWNER.
   - 1.6. THE LOADS SHOWN FOR APPLIANCES AND EQUIPMENT ARE BASED ON DESIGN INFORMATION. THE CONTRACTOR SHALL VERIFY ALL APPLIANCE LOADS PRIOR TO RUNNING THE CIRCUIT. THE MINIMUM CIRCUIT REQUIREMENTS SHALL BE BASED ON THE APPLIANCE NAMEPLATE VALUE OR CODE REQUIREMENTS, WHICHEVER IS MORE STRINGENT. ADDITIONAL COMPENSATION SHALL NOT BE ALLOWED FOR APPLIANCE MODIFICATIONS BY THE CONTRACTOR.
   - 1.7. PRIOR APPROVAL: PRIOR APPROVAL SHALL BE REQUIRED FOR ANY MANUFACTURER OTHER THAN THOSE LISTED FOR ALL SPECIFIED ITEMS IN THESE DRAWINGS. SUBMIT ALL REQUESTS FOR PRIOR APPROVAL 7 DAYS PRIOR TO BID OPENING (UNLESS OTHERWISE SPECIFIED). ENGINEER'S APPROVAL WILL BE IN THE FORM OF AN ADDENDUM.
2. CODES & STANDARDS:
   - 2.1. INSTALLATION AND MATERIALS SHALL COMPLY WITH THE LATEST ADOPTED EDITION OF THE FOLLOWING CODES & STANDARDS:
     - 2.1.1. NATIONAL ELECTRICAL CODE.
     - 2.1.2. NFPA 72. NATIONAL FIRE PROTECTION CODE.
     - 2.1.3. INTERNATIONAL BUILDING CODE.
     - 2.1.4. INTERNATIONAL ENERGY CONSERVATION CODE.
     - 2.1.5. NFPA 101.
     - 2.1.6. ADA .
     - 2.1.7. ANSI.
     - 2.1.8. NEMA.
     - 2.1.9. OSHA.
     - 2.1.10. UL.
3. ALTERATIONS & ADDITIONS TO EXISTING WORK:
   - 3.1. PROVIDE ALL NECESSARY ADDITIONS AND ALTERATIONS TO EXISTING WORK AS REQUIRED TO PROVIDE AND MAINTAIN A COMPLETE AND PROPER ELECTRICAL INSTALLATION.
   - 3.2. AS NECESSARY, RELOCATE EXISTING ELECTRICAL WORK SO OTHER TRADES CAN PURSUE THEIR WORK.
   - 3.3. MAINTAIN POWER TO EXISTING PORTIONS OF BUILDINGS FED FROM OR THROUGH AREA IN SCOPE OF THIS CONTRACT.
   - 3.4. COORDINATE ALL REQUIRED OUTAGES WITH OWNER.
4. BASIC MATERIALS & METHODS:
   - 4.1. ALL POWER AND DISTRIBUTION CABLING SHALL BE COPPER TYPE THWN/THHN.
   - 4.2. ALL ELECTRICAL EQUIPMENT, DEVICES, ETC. LOCATED OUTDOORS SHALL BE WEATHERPROOF.
   - 4.3. CONDUIT ROUTINGS AND DEVICE/EQUIPMENT LOCATIONS SHOWN ARE DIAGRAMMATIC ONLY, CONTRACTOR SHALL FIELD ROUTE AND LOCATE AS REQUIRED. CONDUIT ROUTINGS SHALL BE PARALLEL OR PERPENDICULAR TO BUILDING LINES.
   - 4.4. COORDINATE ALL ELECTRICAL WORK WITH OTHER TRADES AND STRUCTURAL COMPONENTS.
   - 4.5. THE CONDUIT MATERIAL SHALL BE AS FOLLOWS (NM CABLE NOT PERMITTED):
     - 4.5.1. BELOW GRADE - RNC (POWER & SITE LIGHTING ONLY). ELBOWS >1-1/2" SHALL BE RGS.
     - 4.5.2. RISER FROM 36" BELOW GRADE - RGS.
     - 4.5.3. CONCEALED RISER FROM 36" BELOW GRADE - RNC (POWER ONLY).
     - 4.5.4. ABOVE GRADE SUBJECT TO PHYSICAL ABUSE - RGS.
     - 4.5.5. ABOVE GRADE NOT SUBJECT TO PHYSICAL ABUSE OR WEATHER - EMT.
   - 4.6. CONDUIT FITTINGS SHALL BE AS FOLLOWS:
     - 4.6.1. RGS - THREADED GALVANIZED STEEL.
   - 4.7. ALL SIDEWALKS AND PARKING LOT ASPHALT AREAS CUT DUE TO NEW ELECTRICAL SERVICES SHALL BE REPAIRED TO MATCH EXISTING.
   - 4.8. ALL DIMENSIONS TO DEVICES AFF SHALL BE TO CENTERLINE UNLESS NOTED OTHERWISE.
   - 4.9. COORDINATE LOCATIONS OF ELECTRICAL EQUIPMENT WITH ELEVATIONS PRIOR TO ROUGH-IN WORK.
5. UNDERGROUND CONDUIT/CABLE INSTALLATION:
   - 5.1. DIRECTIONAL BORING:
     - 5.1.1. CONDUIT IS TO BE RIGID NONMETALLIC CONDUIT (RNC) SCHEDULE 80 PVC.
     - 5.1.2. CONDUIT IS TO BE ROUTED 48" BELOW FINISHED GRADE MINIMUM TO THE TOP OF CONDUIT.
     - 5.1.3. CONTRACTOR IS TO LOCATE AND AVOID EXISTING UTILITIES AND UNDERGROUND INSTALLATIONS.
     - 5.1.4. WIRE RUNS ARE TO BE CONTINUOUS. IF SPLICES ARE NECESSARY, THEY ARE TO BE MADE USING INSULATED MECHANICAL LUGS.
   - 5.2. TRENCHING:
     - 5.2.1. CONDUIT IS TO BE RIGID NONMETALLIC CONDUIT (RNC) SCHEDULE 80 PVC.
     - 5.2.2. CONDUIT IS TO BE ROUTED 24" BELOW FINISHED GRADE MINIMUM TO THE TOP OF CONDUIT.
     - 5.2.3. CONTRACTOR IS TO LOCATE AND AVOID EXISTING UTILITIES AND UNDERGROUND INSTALLATIONS.
     - 5.2.4. WIRE RUNS ARE TO BE CONTINUOUS. IF SPLICES ARE NECESSARY, THEY ARE TO BE MADE USING INSULATED MECHANICAL LUGS.
     - 5.2.5. ALL FEEDERS INSTALLED BY TRENCHING ARE TO BE MARKED WITH A WARNING RIBBON A MINIMUM OF 12" ABOVE THE CONDUIT.
6. GROUNDING & BONDING:
   - 6.1. PROVIDE AN INSULATED EQUIPMENT GROUNDING CONDUCTOR IN ALL CONDUITS.
   - 6.2. GROUND RODS SHALL BE 3/4"X20' COPPERCLAD STEEL.
   - 6.3. BELOW GRADE CONNECTIONS SHALL BE EXOTHERMIC TYPE.
   - 6.4. ALL CABLES SHALL BE COPPER, ALL BOLTED CONNECTIONS SHALL BE BRONZE.
   - 6.5. WHERE AVAILABLE, BOND TO BUILDING STRUCTURAL STEEL, BUILDING FOUNDATION STEEL, METAL WATER SERVICE PIPING.
   - 6.6. PROVIDE THREE 20' GROUND RODS IN TRIANGLE ARRANGEMENT ON 20' CENTERS FOR MADE ELECTRODE SYSTEM. MEASURE AND RECORD RESISTANCE AND ENSURE <25 OHMS.
7. IDENTIFICATION:
   - 7.1. PROVIDE ENGRAVED 2"x4" PHENOLIC LABELS FOR ALL PANELBOARDS, SAFETY SWITCHES, TRANSFORMERS, CABINETS, ETC.
8. SAFETY SWITCHES:
   - 8.1. HEAVY DUTY, VISIBLE BLADE, LOCKABLE, QUICK-MAKE/QUICK-BREAK, HORSEPOWER RATED, FUSED WHERE INDICATED.
   - 8.2. PROVIDE WITH GROUND LUG KIT.
   - 8.3. EXTERIOR - NEMA 3R.
   - 8.4. APPROVED MANUFACTURERS - SQUARE D, GENERAL ELECTRIC, CUTLER-HAMMER SIEMENS, EATON.
9. PANELBOARDS:
   - 9.1. FRONT ACCESSIBLE, BOLT-ON MOLDED CASE C/Bs, COPPER PHASE & NEUTRAL BUSSING, COPPER GROUND BAR, FULLY RATED (SERIES RATING NOT ALLOWED).
   - 9.2. ENCLOSURES SHALL BE DOOR-IN-DOOR CONSTRUCTION.
   - 9.3. EXTERIOR - NEMA 3R.
   - 9.4. PROVIDE TYPE-WRITTEN DIRECTORY IN CLEAR SLEEVE ON INSIDE OF DOOR.
   - 9.5. APPROVED MANUFACTURERS - SQUARE D, GENERAL ELECTRIC, CUTLER-HAMMER, SIEMENS, EATON.
10. DRY-TYPE TRANSFORMERS <600V:
    - 10.1. 150° RISE.
    - 10.2. COPPER WINDINGS.
    - 10.3. PROVIDE WITH 4" HIGH CONCRETE HOUSEKEEPING PAD.
    - 10.4. GROUND SECONDARY TO STEEL FRAME.
    - 10.5. APPROVED MANUFACTURERS - SQUARE D, GENERAL ELECTRIC, CUTLER-HAMMER, SIEMENS, EATON.

ELECTRICAL LEGEND

SITE EQUIPMENT:

- HANDHOLE. SEE DETAIL.
- ALABAMA POWER COMPANY METER.
- PANELBOARD. MOUNT AS INDICATED: (SEE PANELBOARD SCHEDULES)
- DRY TYPE TRANSFORMER: (INSTALLED ON A 4" HOUSEKEEPING PAD)
- SERVICE DISCONNECT SWITCH (NON-FUSED): (HEAVY DUTY FOR OUTDOOR USE)
- DISCONNECT SWITCH (NON-FUSED); (HEAVY DUTY FOR OUTDOOR USE)
- (X) ELECTRICAL TERMINATION TO EQUIPMENT. (SEE SCHEDULES FOR MORE INFORMATION)

IDENTIFICATION:

- (BLT) IDENTIFICATION TAG: MUSCO LIGHTING POLE/FIXTURES. (SEE WIRING DIAGRAM FOR MORE INFORMATION)
- (4P) IDENTIFICATION TAG: PANELBOARDS. (SEE SCHEDULES FOR MORE INFORMATION)
- (HH1) IDENTIFICATION TAG: HANDHOLES. (SEE SCHEDULES FOR MORE INFORMATION)

SITE CONDUIT / WIRING:

UNDERGROUND:

—— UG —— UG ——

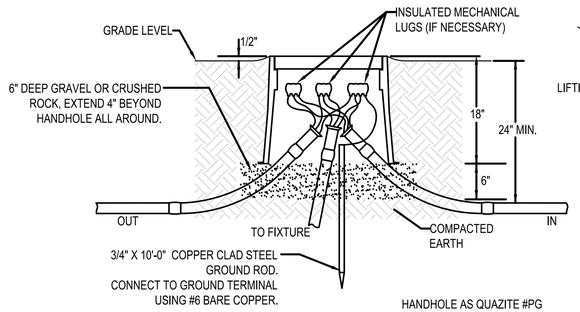

INSTALLATION DETAIL

HANDHOLE AS QUAZITE #PG 1324BA18 BOX COMPLETE WITH THEIR PG1324HA00 COVER

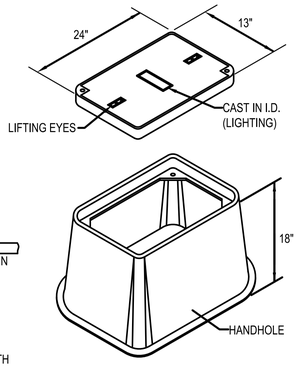

CONSTRUCTION DETAIL

HANDHOLE NOTES:

1) HANDHOLE SHALL HAVE LOGO CAST IN COVER (LOGO = LIGHTING). INSTALL IN ACCORDANCE WITH THE MANUFACTURER'S PRINTED INSTRUCTIONS AND THESE REQUIREMENTS. HANDHOLE COVER SHALL BE TIER 22 RATED.

2) TERMINATE CONDUITS ENTERING HANDHOLE WITH END BELL. CONSTRUCT CONDUIT RISE TO ENTER BOX FROM SIDE WITH 22-1/2° SWEEP ELBOWS.

1 LIGHT FIXTURE HANDHOLE DETAIL

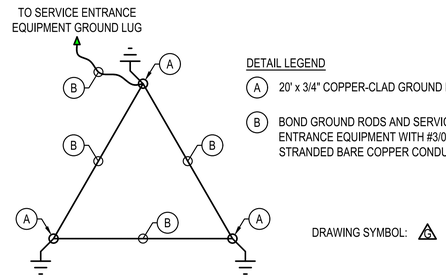

DETAIL LEGEND

- (A) 20' x 3/4" COPPER-CLAD GROUND ROD
- (B) BOND GROUND RODS AND SERVICE ENTRANCE EQUIPMENT WITH #3/0 TINNED STRANDED BARE COPPER CONDUCTOR

DRAWING SYMBOL: (G)

DETAIL NOTES

1. GROUNDS RODS ARE TO BE INSTALLED IN A TRIANGLE CONFIGURATION AND NO LESS THAN 20 FT APART.

2 GROUNDING TRIAD DETAIL

JAGUAR CONSULTING
CHRISTINA MARIE P.E.
PE 50660 - ECA 50377
C: (251) 455-9189
Christy@JagCon.org

ALABAMA LICENSED No. 50660 PROFESSIONAL ENGINEER CHRISTINA MARIE
05/20/2026

NUMBER	REVISION DESCRIPTION

CITY OF MOBILE - TRIMMIER PARK
LIGHT UPGRADES - PR#068-26
MOBILE, ALABAMA

DESIGNED BY: TMM
DRAWN BY: TMM
CHECKED BY: CM
DATE: 05-20-2026

SHEET TITLE: ELECTRICAL LEGEND & ABBREVIATIONS & SPECIFICATIONS

SHEET: E101

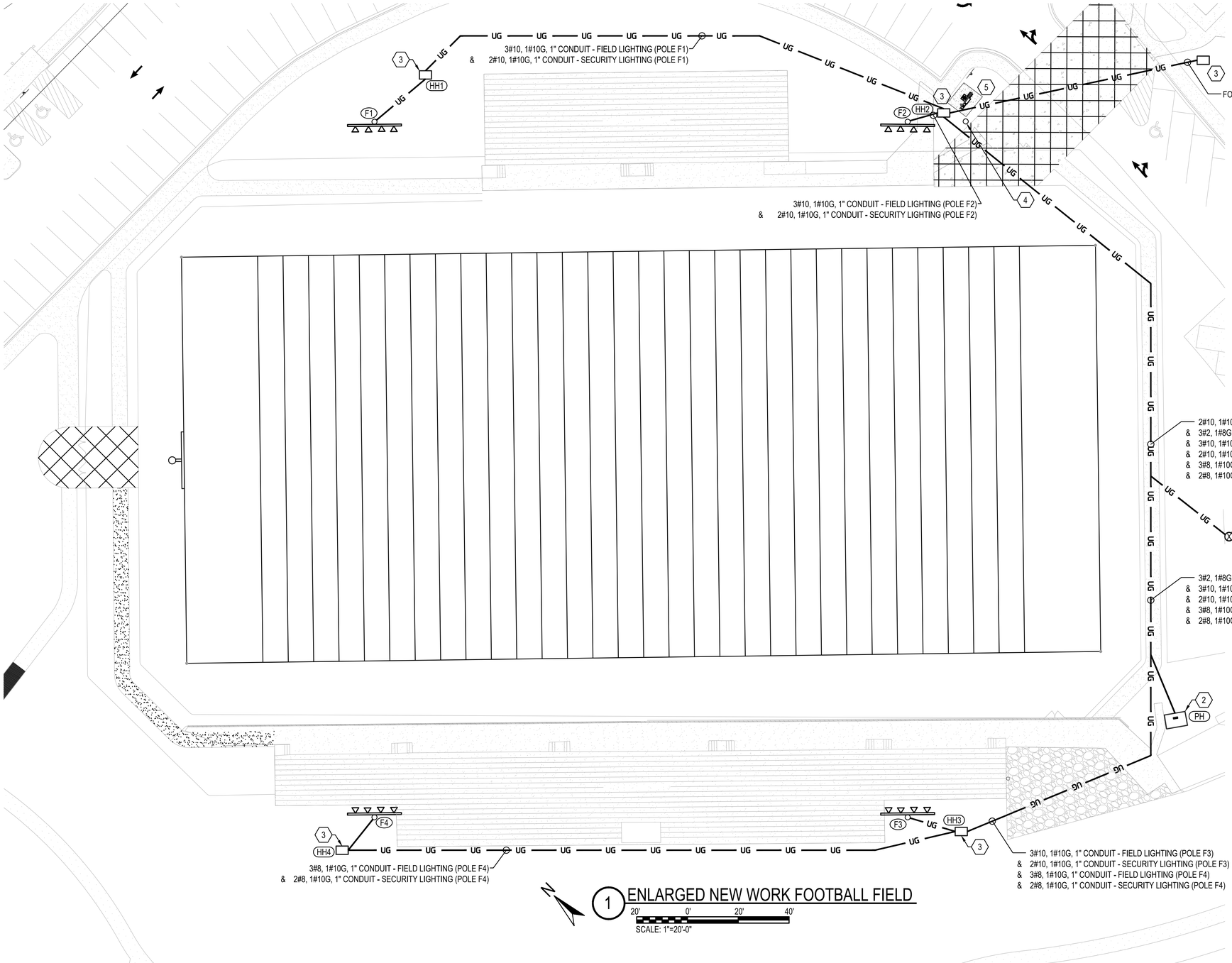

1 ENLARGED NEW WORK FOOTBALL FIELD

20' 0' 20' 40'

SCALE: 1"=20'-0"

SHEET KEYNOTES

1. APPROXIMATE LOCATION OF A NEW LED FOOTBALL SCOREBOARD. COORDINATE FINAL REQUIREMENTS WITH FINAL EQUIPMENT SELECTION AND ADJUST FEEDERS / BREAKER ACCORDINGLY.
2. APPROXIMATE LOCATION OF THE EXISTING IRRIGATION PUMP HOUSE. THE IRRIGATION PANEL IN THIS WELL HOUSE IS TO BE DISCONNECTED, REMOVED, AND REPLACED NEW IN THE NEW WORK PHASE.
3. HANDHOLE BOXES ARE TO BE QUAZITE BOX #PG 1324BA18 WITH "ELECTRICAL" ENGRAVED IN THE PG1324HA00 LID. PROVIDE A MINIMUM OF 3" OF GRAVEL IN THE BOTTOM OF THE BOX.
4. APPROXIMATE LOCATION OF A DISCONNECTED TRANSFORMER BANK MOUNTED TO AN EXISTING UTILITY POLE. THE ELECTRICAL CONTRACTOR IS TO COORDINATE THE UPGRADE/RE-CONNECTION REQUIRMENTS WITH ALABAMA POWER COMPANY PRIOR TO BEGINNING WORK.
5. APPROXIMATE LOCATION OF A NEW SERVICE PEDESTAL. SEE ENLARGED PLAN FOR MORE DETAILS.

GENERAL NOTES

1. THE ELECTRICAL CONTRACTOR SHALL TAKE SPECIAL CARE TO ROUTE NEW UNDERGROUND FEEDERS TO AVOID CONFLICT WITH EXISTING TREE ROOTS.
2. THE ELECTRICAL CONTRACTOR IS RESPONSIBLE FOR THE INSTALLATION OF ALL NEW MUSCO LIGHTING EQUIPMENT IN ACCORDANCE WITH MUSCO DOCUMENTATION AND DIRECTION. COORDINATE ALL INSTALLATIONS WITH MUSCO PRIOR TO BEGINNING WORK.
3. ALL WIRE RUNS ARE TO BE CONTINUOUS. IF ANY SPLICES ARE NECESSARY, THEY ARE TO BE MADE USING INSULATED MECHANICAL LUGS.
4. THE ELECTRICAL CONTRACTOR IS TO INSTALL A SPARE 1" SCHEDULE 80 PVC CONDUIT UNDERGROUND IN ALL ROUTES BETWEEN HANDHOLES.
5. THE ELECTRICAL CONTRACTOR IS TO LOCATE EXISTING UNDERGROUND INSTALLATIONS AND UTILITIES, AND IS RESPONSIBLE FOR ANY DAMAGE INCURRED DURING THE NEW WORK PHASE.
6. THE CONTRACTOR IS TO MITIGATE HARM TO THE EXISTING LANDSCAPE AND IS RESPONSIBLE FOR ANY REPAIRS TO AT-FAULT DAMAGE INCURRED THROUGH THE SCOPE OF THIS PROJECT, INCLUDING SPREADING OF GRASS SEED UPON COMPLETION OF WORK.

JAGUAR CONSULTING
CHRISTINA MARIE P.E.
PE 50660 - ECA 50377
C: (251) 455-9189
Christy@JagCon.org

ALABAMA LICENSED No. 50660 PROFESSIONAL ENGINEER CHRISTINA MARIE
05/20/2026

NUMBER	REVISION DESCRIPTION

CITY OF MOBILE - TRIMMIER PARK LIGHT UPGRADES - PR#068-26

MOBILE, ALABAMA

DESIGNED BY: TMM
DRAWN BY: TMM
CHECKED BY: CM
DATE: 05-20-2026

SHEET TITLE: ELECTRICAL OVERALL SITE PLAN

SHEET: E201

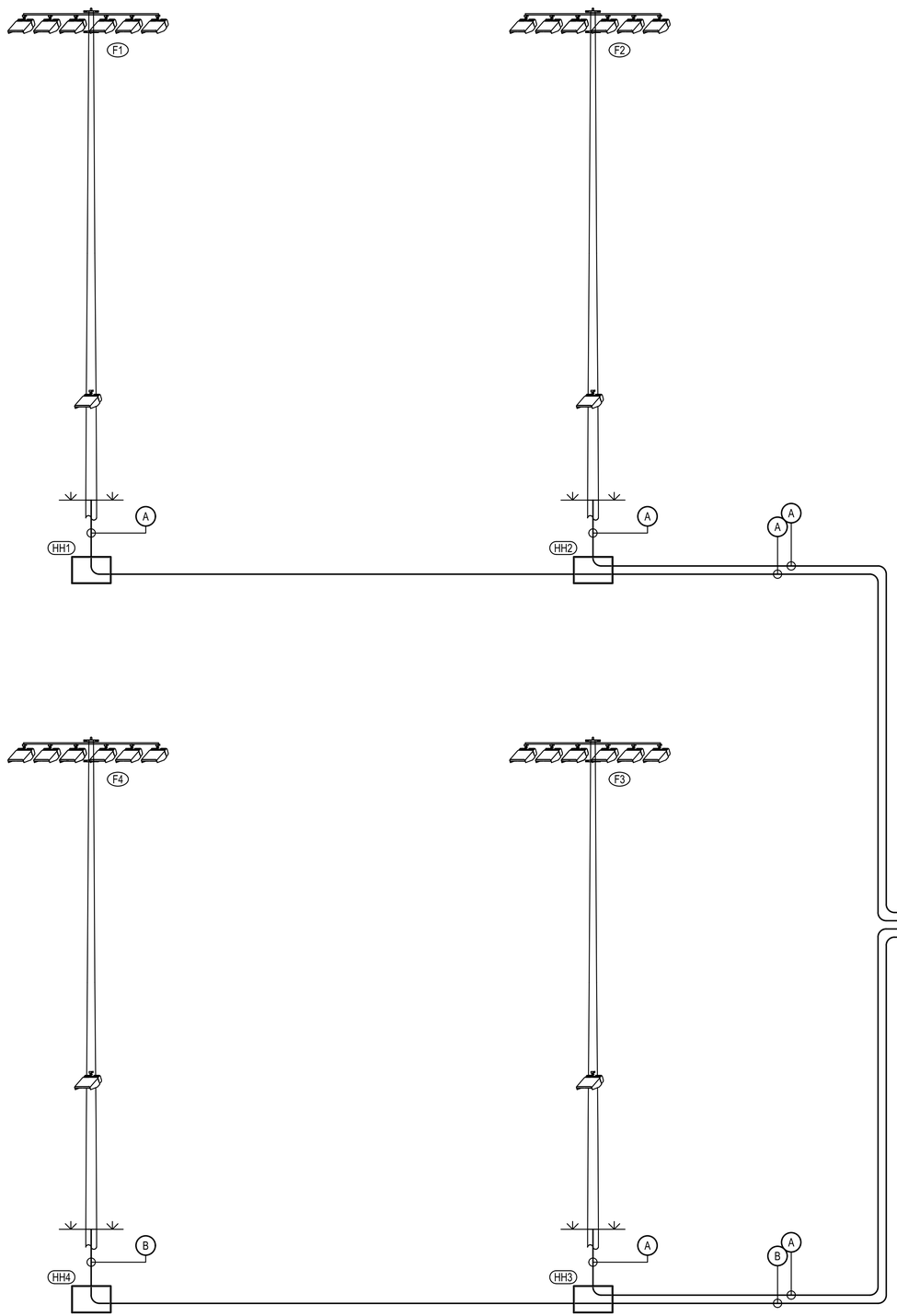

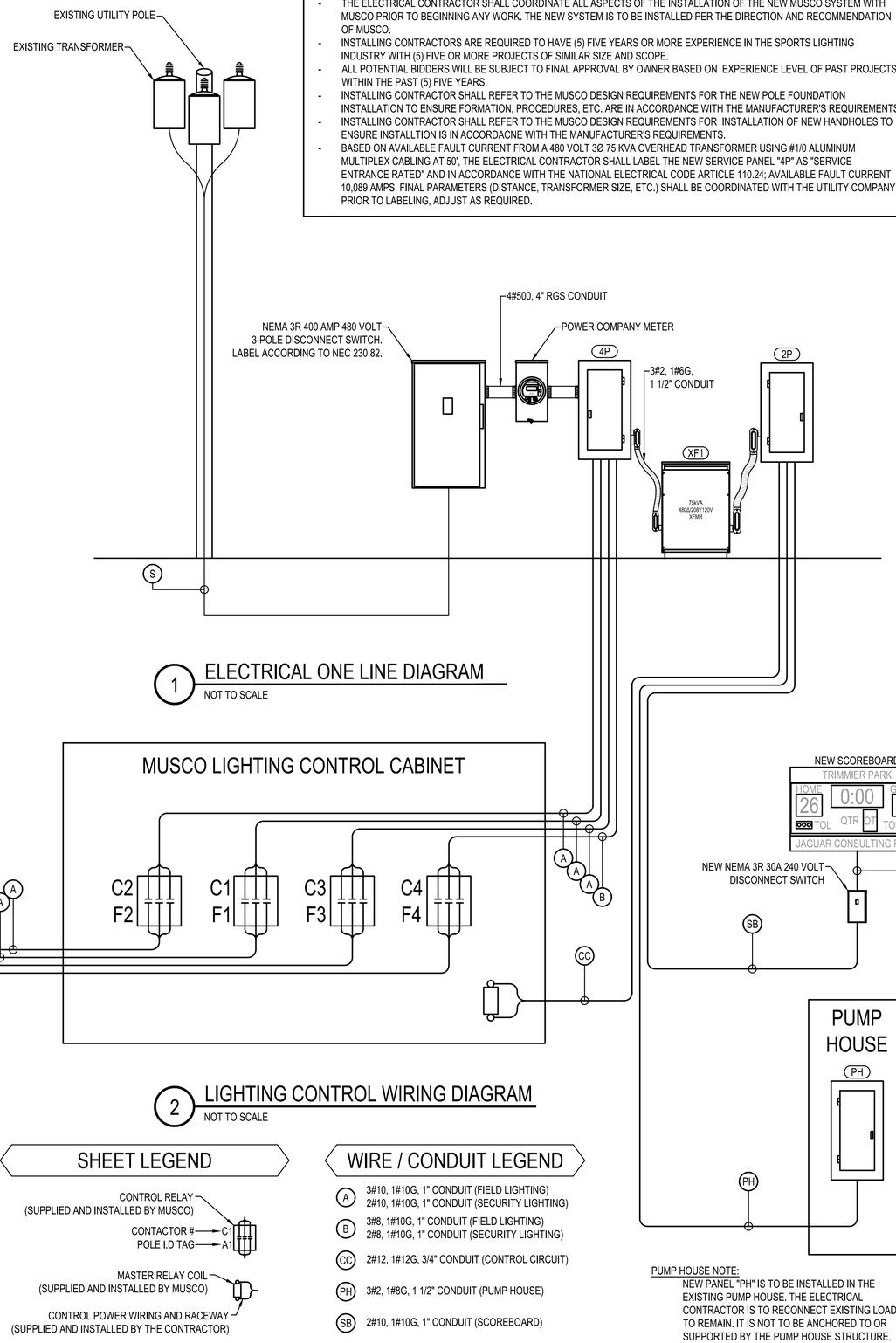

NOTE:

- THE ELECTRICAL CONTRACTOR SHALL COORDINATE ALL ASPECTS OF THE INSTALLATION OF THE NEW MUSCO SYSTEM WITH MUSCO PRIOR TO BEGINNING ANY WORK. THE NEW SYSTEM IS TO BE INSTALLED PER THE DIRECTION AND RECOMMENDATION OF MUSCO.
- INSTALLING CONTRACTORS ARE REQUIRED TO HAVE (5) FIVE YEARS OR MORE EXPERIENCE IN THE SPORTS LIGHTING INDUSTRY WITH (5) FIVE OR MORE PROJECTS OF SIMILAR SIZE AND SCOPE.
- ALL POTENTIAL BIDDERS WILL BE SUBJECT TO FINAL APPROVAL BY OWNER BASED ON EXPERIENCE LEVEL OF PAST PROJECTS WITHIN THE PAST (5) FIVE YEARS.
- INSTALLING CONTRACTOR SHALL REFER TO THE MUSCO DESIGN REQUIREMENTS FOR THE NEW POLE FOUNDATION INSTALLATION TO ENSURE FORMATION, PROCEDURES, ETC. ARE IN ACCORDANCE WITH THE MANUFACTURER'S REQUIREMENTS.
- INSTALLING CONTRACTOR SHALL REFER TO THE MUSCO DESIGN REQUIREMENTS FOR INSTALLATION OF NEW HANDHOLES TO ENSURE INSTALLTION IS IN ACCORDACNE WITH THE MANUFACTURER'S REQUIREMENTS.
- BASED ON AVAILABLE FAULT CURRENT FROM A 480 VOLT 3Ø 75 KVA OVERHEAD TRANSFORMER USING #1/0 ALUMINUM MULTIPLEX CABLING AT 50', THE ELECTRICAL CONTRACTOR SHALL LABEL THE NEW SERVICE PANEL "4P" AS "SERVICE ENTRANCE RATED" AND IN ACCORDANCE WITH THE NATIONAL ELECTRICAL CODE ARTICLE 110.24; AVAILABLE FAULT CURRENT 10,089 AMPS. FINAL PARAMETERS (DISTANCE, TRANSFORMER SIZE, ETC.) SHALL BE COORDINATED WITH THE UTILITY COMPANY PRIOR TO LABELING, ADJUST AS REQUIRED.

1 ELECTRICAL ONE LINE DIAGRAM
NOT TO SCALE

2 LIGHTING CONTROL WIRING DIAGRAM
NOT TO SCALE

SHEET LEGEND

CONTROL RELAY
(SUPPLIED AND INSTALLED BY MUSCO)

CONTACTOR # → C1
POLE I.D TAG → A1

MASTER RELAY COIL
(SUPPLIED AND INSTALLED BY MUSCO)

CONTROL POWER WIRING AND RACEWAY
(SUPPLIED AND INSTALLED BY THE CONTRACTOR)

WIRE / CONDUIT LEGEND

- (A) 3#10, 1#10G, 1" CONDUIT (FIELD LIGHTING)
  2#10, 1#10G, 1" CONDUIT (SECURITY LIGHTING)
- (B) 3#8, 1#10G, 1" CONDUIT (FIELD LIGHTING)
  2#8, 1#10G, 1" CONDUIT (SECURITY LIGHTING)
- (CC) 2#12, 1#12G, 3/4" CONDUIT (CONTROL CIRCUIT)
- (PH) 3#2, 1#8G, 1 1/2" CONDUIT (PUMP HOUSE)
- (SB) 2#10, 1#10G, 1" CONDUIT (SCOREBOARD)
- (S) 4#500mcm, 4" CONDUIT (SERVICE)

PUMP HOUSE NOTE:
NEW PANEL "PH" IS TO BE INSTALLED IN THE EXISTING PUMP HOUSE. THE ELECTRICAL CONTRACTOR IS TO RECONNECT EXISTING LOADS TO REMAIN. IT IS NOT TO BE ANCHORED TO OR SUPPORTED BY THE PUMP HOUSE STRUCTURE.

JAGUAR CONSULTING
CHRISTINA MARIE P.E.
PE 50660 - ECA 50377
C: (251) 455-9189
Christy@JagCon.org

ALABAMA LICENSED
No. 50660
PROFESSIONAL
ENGINEER
CHRISTINA MARIE
05/20/2026

NUMBER	REVISION	DESCRIPTION

CITY OF MOBILE - TRIMMIER PARK
LIGHT UPGRADES - PR#068-26
MOBILE, ALABAMA

DESIGNED BY: TMM
DRAWN BY: TMM
CHECKED BY: CM
DATE: 05-20-2026

SHEET TITLE: ELECTRICAL ONE LINE DIAGRAM & LIGHTING CONTROL WIRING DIAGRAM

SHEET: E301

PANELBOARD INFORMATION SCHEDULE

MARK	PANEL TYPE	MOUNT	VOLTAGE	PH	WIRE	MAIN BKR RTG	FDR BKR RTG	kAIC RTG	BUS RTG (A)	FEEDER
4P	N3R SER	SURFACE	480Y277V	3	4	400	N/A	14	400	4#500, 4"C
2P	N3R	SURFACE	208Y120V	3	4	200	N/A	10	200	4#3/0, 1#4G, 2"C
PH	N3R	SURFACE	208Y120V	3	4	100	N/A	10	100	3#2, 1#8G, 1 1/2"C
NOTES	ALL PANELBOARDS ARE TO BE EQUIPPED WITH COPPER BUS.									
	ALL PANELBOARDS ARE TO ARC FLASH WARNING LABEL IN ACCORDANCE WITH NEC 110.16.									

PANELBOARD SCHEDULE: 4P

VOLTAGE: 480Y/277V
PHASE: 3
AMPS: 400A MAIN BREAKER

CKT	LOAD	BKR P	BKR AT	CKT (kVA)	PHASE (kVA) A	PHASE (kVA) B	PHASE (kVA) C	CKT (kVA)	BKR AT	BKR P	LOAD	CKT
1	POLE F1 FIELD LTG	3	30	3.7	7.4			3.7	30	3	POLE F3 FIELD LTG	2
3				3.7		7.4		3.7				4
5				3.7			7.4	3.7				6
7	POLE F2 FIELD LTG	3	30	3.7	7.4			3.7	30	3	POLE F4 FIELD LTG	8
9				3.7		7.4		3.7				10
11				3.7			7.4	3.7				12
13	POLES F1/F2 SECURITY LTG	2	30	1.2	2.4			1.2	30	2	POLES F3/F4 SECURITY LTG	14
15				1.2		2.4		1.2				16
17												18
19	SPACE	3								3	SPACE	20
21												22
23												24
25	SPACE	3								3	SPACE	26
27												28
29												30
31	SPACE	3								3	SPACE	32
33												34
35												36
37	SPACE	3			0.2			0.2	110	3	TRANSFORMER - TO PANEL 2P	38
39						0.2		0.2				40
41							0.1	0.1				42
		PHASE (kVA):			17	17	15	TOTAL (kVA):	49.7			
		PHASE (AMPS):			63	63	54					

PANELBOARD SCHEDULE: 2P

VOLTAGE: 208Y/120
PHASE: 3
AMPS: 200 MAIN BREAKER

CKT	LOAD	BKR P	BKR AT	CKT (kVA)	PHASE (kVA) A	PHASE (kVA) B	PHASE (kVA) C	CKT (kVA)	BKR AT	BKR P	LOAD	CKT
1	SCOREBOARD	2	30	0.2	0.2				100	2	PANEL PH	2
3				0.2		0.2						4
5	LIGHTING CONTROL	1	30	0.1			0.1		20	1	SPARE	6
7	SPARE	1	20						20	1	SPARE	8
9	SPARE	1	20						20	1	SPARE	10
11	SPARE	1	20						20	1	SPARE	12
13	SPARE	1	20						20	1	SPARE	14
15	SPARE	1	20						20	1	SPARE	16
17	SPARE	1	20						20	1	SPARE	18
19	SPARE	1	20						20	1	SPARE	20
21	SPACE	1								1	SPACE	22
23	SPACE	1								1	SPACE	24
25	SPACE	1								1	SPACE	26
27	SPACE	1								1	SPACE	28
29	SPACE	1								1	SPACE	30
31	SPACE	1								1	SPACE	32
33	SPACE	1								1	SPACE	34
35	SPACE	1								1	SPACE	36
37	SPACE	1								1	SPACE	38
39	SPACE	1								1	SPACE	40
41	SPACE	1								1	SPACE	42
		PHASE (kVA):			0	0	0	TOTAL (kVA):	0.5			
		PHASE (AMPS):			2	2	1					

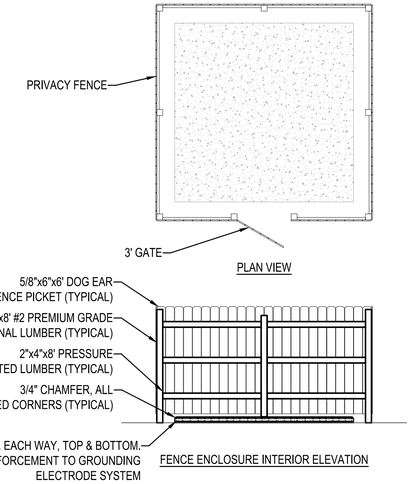

4 TYPICAL LIGHTING CONTROL PEDESTAL FENCE AND CONCRETE PAD DETAIL
NOT TO SCALE

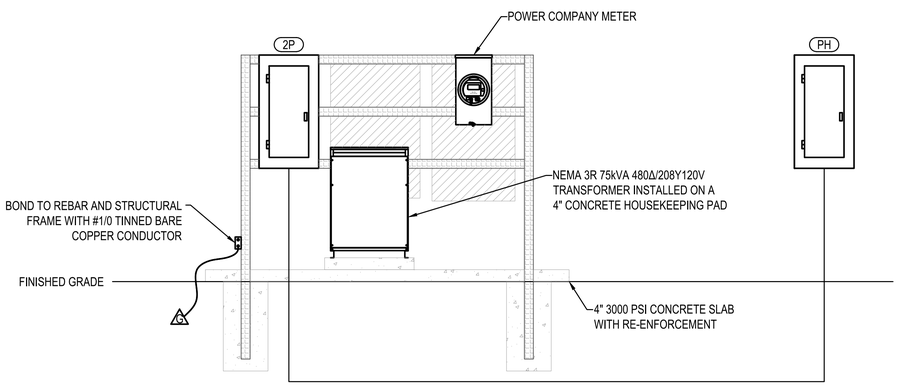

1 SERVICE PEDESTAL ELEVATION (LOOKING SOUTHEAST)
NOT TO SCALE

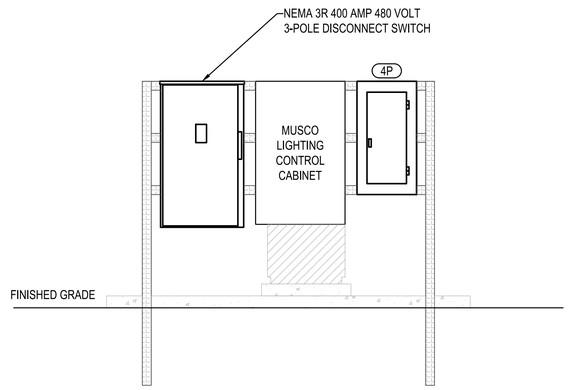

2 SERVICE PEDESTAL ELEVATION (LOOKING NORTHWEST)
NOT TO SCALE

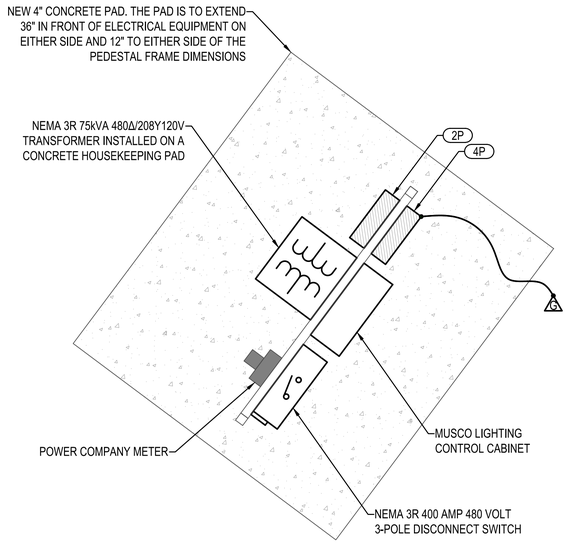

3 SERVICE PEDESTAL ENLARGED PLAN VIEW
NOT TO SCALE

JAGUAR CONSULTING
CHRISTINA MARIE P.E.
PE 50660 - ECA 50377
C: (251) 455-9189
Christy@JagCon.org

95%

ALABAMA 50660 PROFESSIONAL ENGINEER REGISTERED CHRISTINA MARIE

05/20/2026

NUMBER	REVISION DESCRIPTION

CITY OF MOBILE - TRIMMIER PARK
LIGHT UPGRADES - PR#068-26
MOBILE, ALABAMA

DESIGNED BY: TMM
DRAWN BY: TMM
CHECKED BY: CM
DATE: 05-20-2026

SHEET TITLE: ELECTRICAL SCHEDULES & ELEVATIONS

SHEET: E401

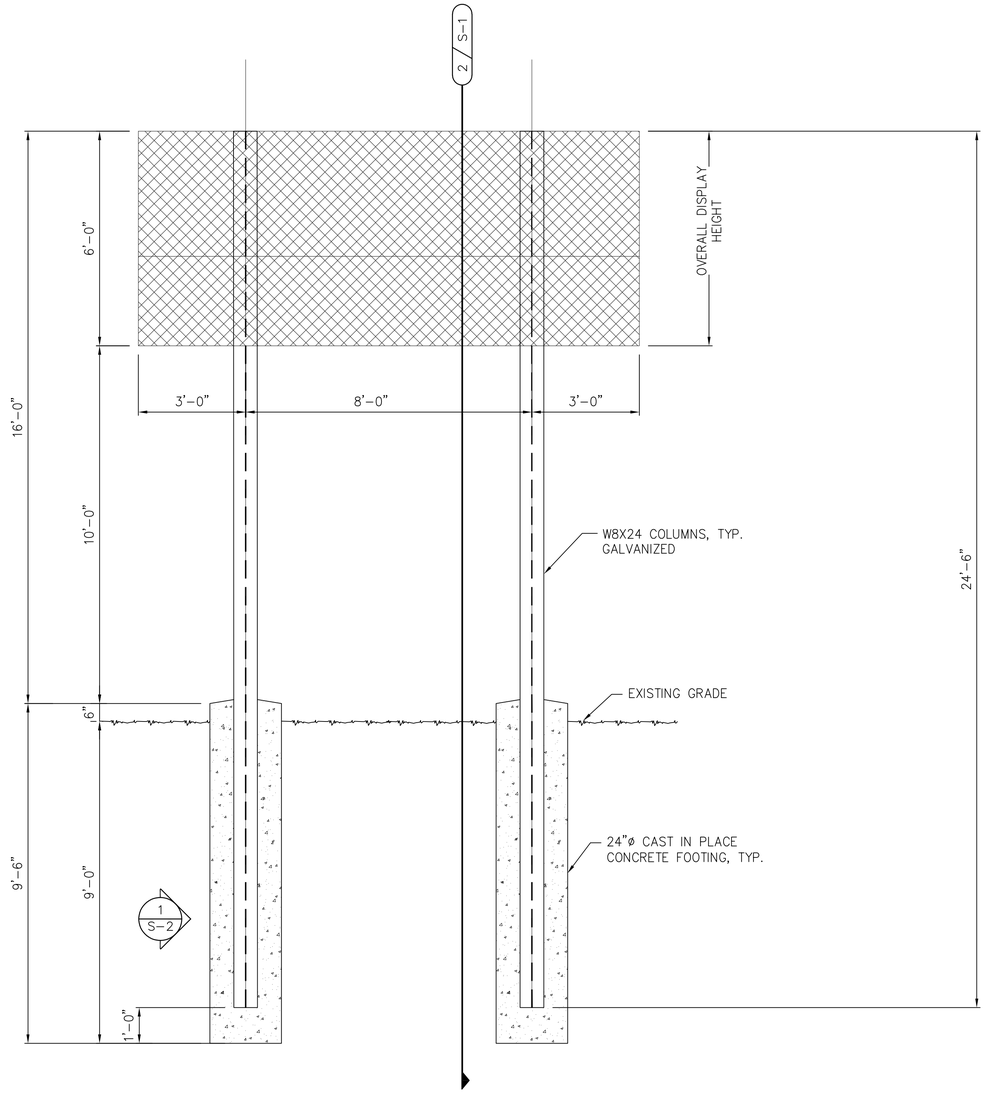

FRONT ELEVATION 1 / S-1
SCALE: 1/2"=1'-0"

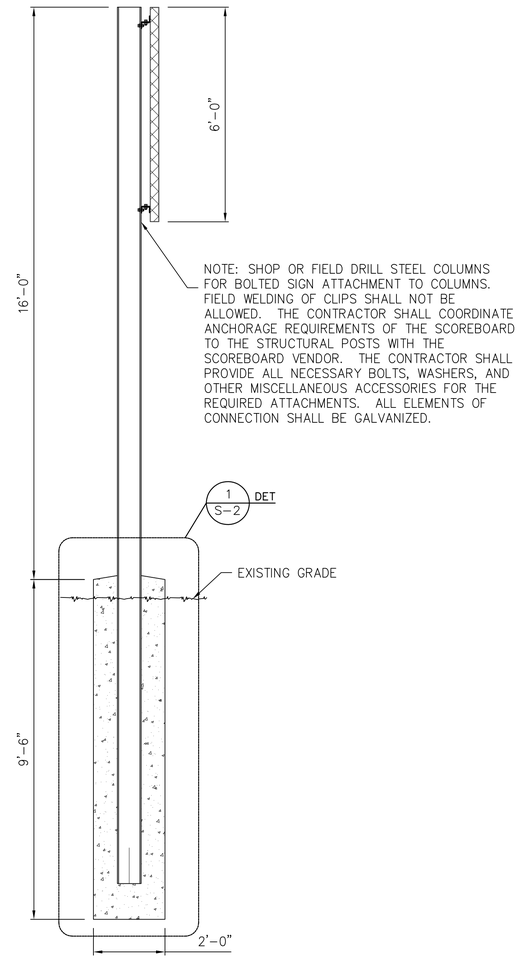

SIDE ELEVATION 2 / S-1
SCALE: 1/2"=1'-0"

POLE INSTALLATION NOTES:

EXCAVATE HOLES TO THE SIZE AND EMBEDMENT DEPTH SPECIFIED. SUSPEND POLES IN PLACE AT THE CENTER OF THE EXCAVATION AND HOLD POLES PLUMB. TEMPORARILY BRACE POLES AS REQUIRED TO MAINTAIN PROPER POSITION, ALIGNMENT, AND ELEVATION. FILL ANNULAR SPACE AROUND POLE WITH FRESH CONCRETE

REVISION	DATE	DESCRIPTION
–	05.20.26	ISSUED FOR BID

BARTER & ASSOCIATES, INC.
Structural Engineers
1614 GOVERNMENT STREET
MOBILE, ALABAMA 36604-1102
PHONE (251)473-8354
FAX (251)473-8356

City of Mobile
Trimmier Park Lights Upgrades
PR-068-24
Mobile, AL

ALABAMA LICENSED No. 20131 PROFESSIONAL ENGINEER JAMES A. RUSSELL
05.20.2026

SHEET TITLE:
SCOREBOARD ELEVATIONS

SCALE: AS NOTED	DESIGNED BY: JAR	SHEET NO. S-1
PROJECT NO: 26025	CHECKED BY: JAR	
PLOT SCALE:	FILE NO.:	

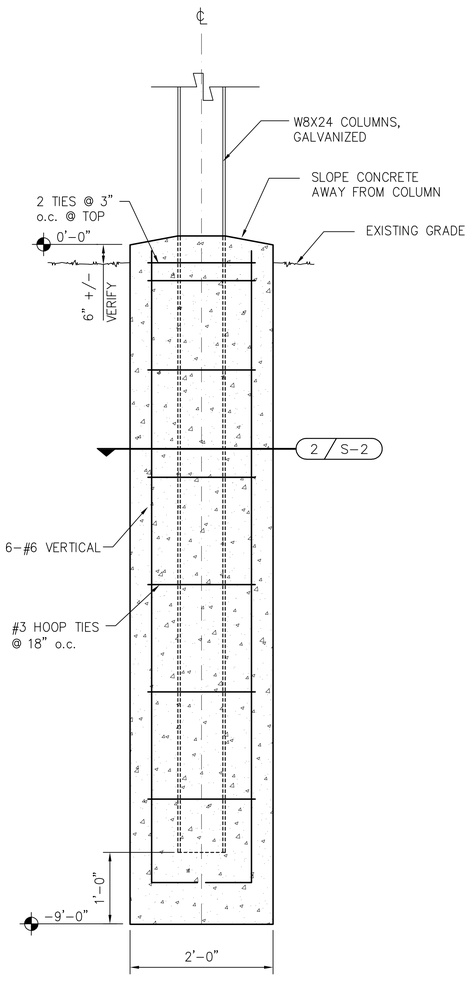

DRILLED PIER DETAIL

DETAIL 1 / S-2
SCALE: 1"=1'-0"

DRILLED PIER NOTES:
1. CONCRETE STRENGTH TO BE 4,000 PSI @ 28 DAYS
2. FORM TOP SECTIONS OF DRILLED PIER WITH SONOTUBE OR OTHER SUITABLE FORM AS REQUIRED.

STRUCTURAL DESIGN CRITERIA

APPLICABLE CODES

2021 INTERNATIONAL BUILDING CODE

ASCE 7-22 – MINIMUM DESIGN LOADS FOR BUILDINGS & OTHER STRUCTURES

AISC 360-16 (15TH EDITION) – STEEL CONSTRUCTION MANUAL

ACI 318-14 – BUILDING CODE REQUIREMENTS FOR STRUCTURAL CONCRETE

WIND LOADS (ASCE 7-22)

WIND SPEED Vult = 149 MPH; Vasd = 115 MPH

WIND RISK CATEGORY = II

WIND EXPOSURE CATEGORY = "C"

STRUCTURAL GENERAL NOTES

GENERAL:

1. THE CONTRACTOR SHALL VISIT THE SITE AND BECOME FAMILIAR WITH THE EXISTING CONDITIONS PRIOR TO SUBMITTING A BID.
2. THE CONTRACTOR SHALL VERIFY FOUNDATION LAYOUT AND ELEVATIONS BEFORE STARTING WORK. COORDINATE FINAL LAYOUT WITH APPROVED SCOREBOARD VENDOR DRAWINGS.
3. CONTRACTOR SHALL PROVIDE AND MAINTAIN TEMPORARY BRACING, SHORING, GUYING, ETC. AND OTHER METHODS TO PREVENT EXCESSIVE CONSTRUCTION STRESSES. THESE PROVISIONS ARE TO REMAIN IN PLACE UNTIL SUFFICIENT PERMANENT MEMBERS ARE CONSTRUCTED TO INSURE THE SAFETY OF THE STRUCTURE.
4. UNLESS OTHERWISE NOTED, DETAILS SHOWN ON ANY DRAWING ARE TO BE CONSIDERED TYPICAL FOR ALL SIMILAR CONDITIONS.

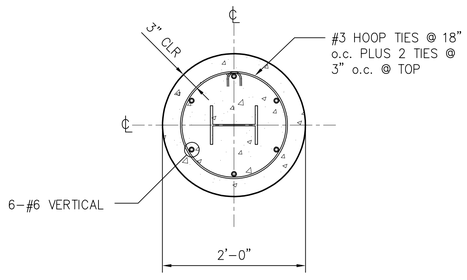

DRILLED PIER REINFORCEMENT DETAIL

DETAIL 2 / S-2
SCALE: 1"=1'-0"

FOUNDATIONS/SOILS:

1. ALL FOUNDATIONS, OR PORTIONS THEREOF BELOW GRADE, MAY BE EARTH FORMED BY NEAT EXCAVATIONS. WHERE SOILS ARE NOT SUITABLE TO SERVE AS EARTH FORMS OR WHERE SOILS SLOUGH INTO THE FOUNDATION EXCAVATION, THEN THE SIDES OF THE FOUNDATION SHALL BE FORMED.
2. DRILLED SHAFT FOUNDATIONS SHALL BE INSTALLED AS SOON AS PRACTICAL AFTER THE INITIAL EXCAVATION. IN ALL CASES, THE FOUNDATION MUST BE PL;ACED WITHIN 48-HOURS OF THE INITIAL SHAFT EXCAVATION.

CONCRETE WORK:

1. CONCRETE SHALL HAVE THE MINIMUM STRENGTH AND MEET THE PROPERTIES AS DESCRIBED BELOW FOR THE VARIOUS CLASSES OF CONCRETE & GROUT:

MIX TYPE	SUPER P	MAX. SLUMP **	W/C RATIO	% AIR	MAX. AGGR.	COMMENT	LOCATION
4,000 PSI	N/A	4" MAX.	0.51 MAX.	4-6			FOUNDATIONS
** #/# INDICATES SLUMP PRIOR TO/AFTER ADDITION OF SUPER P TO MIX.							

2. ALL CONCRETE CONSTRUCTION SHALL CONFORM TO THE 2018 "ACI MANUAL OF CONCRETE PRACTICE."
3. PORTLAND CEMENT SHALL CONFORM TO ASTM C 150, TYPE I OR II.
4. ALL AGGREGATE FOR NORMAL WEIGHT CONCRETE SHALL MEET ASTM C33.

STEEL:

1. STRUCTURAL STEEL SHALL MEET THE LATEST AISC "SPECIFICATION FOR THE DESIGN, FABRICATION AND ERECTION OF STRUCTURAL STEEL FOR BUILDINGS".
2. ALL STRUCTURAL STEEL TO MEET ASTM A992 – f'y = 50ksi. ALL PLATES, ANGLES, AND MISCELLANEOUS SHAPES TO MEET ASTM A36 – f'y = 36ksi, ALL PIPES TO MEET ASTM A53, GRADE B – f'y = 35ksi.
3. WELDING SHALL CONFORM TO THE STANDARDS SET FORTH IN AWS PUBLICATION "WELDING IN BUILDING CONSTRUCTION".
4. ALL NOTED SHOP CONNECTIONS TO HAVE 5/16" FILLET WELDS MINIMUM UNLESS NOTED OTHERWISE.
5. ALL FIELD WELDS TO BE WITH E70XX ELECTRODES.
6. ALL STRUCTURAL STEEL TO BE HOT-DIPPED GALVANIZED AFTER FABRICATION

ALABAMA LICENSED No. 20131 PROFESSIONAL ENGINEER JAMES A. RUSSELL
05.20.2026

REVISION	DATE	DESCRIPTION
–	05.20.26	ISSUED FOR BID

BARTER & ASSOCIATES, INC.
Structural Engineers
1614 GOVERNMENT STREET
MOBILE, ALABAMA 36604-1102
PHONE (251)473-8354
FAX (251)473-8356

City of Mobile
Trimmier Park Lights Upgrades
PR-068-24
Mobile, AL

SHEET TITLE:
SCOREBOARD FOUNDATION DETAILS

SCALE: AS NOTED	DESIGNED BY: JAR	SHEET NO. S-2
PROJECT NO: 26025	CHECKED BY: JAR	
PLOT SCALE:	FILE NO.:	

MUSCO LIGHTING PROJECT
RELATED DOCUMENTS
(for reference only)

We Make It Happen®



Elk River High School Stadium, Elk River, Minnesota, USA

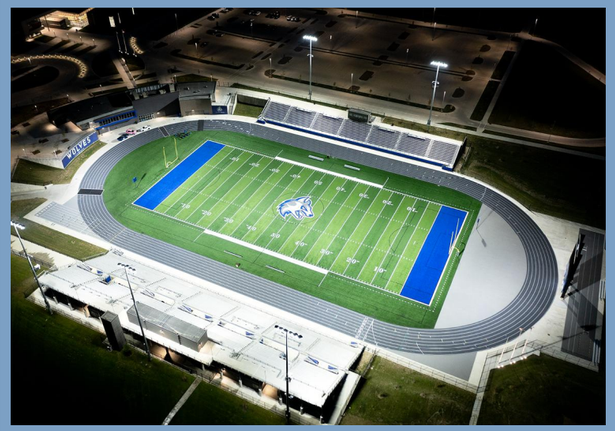

Waukee Northwest High School, Waukee, Iowa, USA

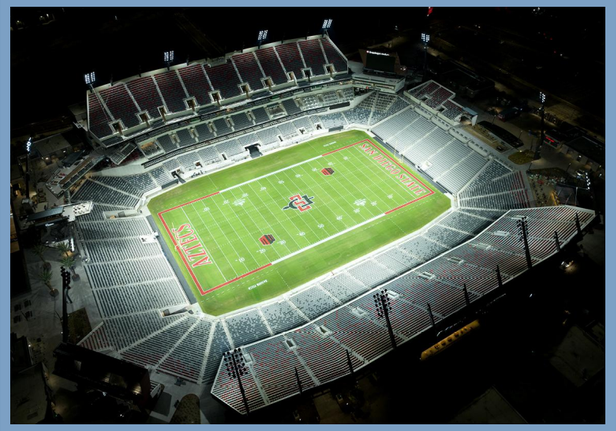

San Diego State University, Snapdragon Stadium, San Diego, California, USA



AT&T Stadium, Dallas Cowboys, Arlington, Texas, USA

Trimmier Park Football

Mobile,AL

Sales Representative: Gaines Todd JR · Designed By: Cody Clark · Design No.: 156970C · March 27, 2026

Not to be reproduced in whole or part without the written consent of Musco Lighting. ©1981, 2026 Musco Sports Lighting, LLC.

Trimmier Park Football
Mobile,AL

LIGHTING SYSTEM

Structure/Fixture Summary

Structure ID	Structure Height	Fixt. Attachment Ht.	Fixture Qty	Fixture Type	Load	Circuit
F1-F2	70'	70'	6	TLC-LED-1500	8.46 kW	A
		16'	2	TLC-BT-575	1.15 kW	A
F3-F4	70'	70'	6	TLC-LED-1500	8.46 kW	A
		23'	2	TLC-BT-575	1.15 kW	A
4			**32**		**38.44 kW**	

Circuit Summary

Circuit	Description	Load	Fixture Qty
A	Football	38.44 kW	32

Fixture Type Summary

Type	Circuit	Source	Wattage	Lumens	L90	L80	L70	Quantity
TLC-BT-575	A	LED 5700K - 75 CRI	575W	52,000	>120,000	>120,000	>120,000	8
TLC-LED-1500	A	LED 5700K - 75 CRI	1410W	181,000	>120,000	>120,000	>120,000	24

Single Fixture Amperage Draw Chart

Driver Specifications (.90 min power factor)	Line Amperage Per Fixture (max draw)						
Single Phase Voltage	208 (60)	220 (60)	240 (60)	277 (60)	347 (60)	380 (60)	480 (60)
TLC-LED-1500	8.4	7.9	7.3	6.3	5.0	4.6	3.6
TLC-BT-575	3.3	3.2	2.9	2.5	2.0	1.8	1.5

Light Level Summary

Calculation Grid Summary

Grid Name	Calculation Metric	Illumination Ave					Circuits	Fixture Qty
		Ave	Min	Max	Max/Min	Ave/Min		
Football	Horizontal Illuminance	50.53	39	63	1.64	1.31	A	32
Football Spill @ 3ft.	Horizontal Illuminance	0.0328	0.00	0.11	58.426	16.919	A	32
Football Spill @ 5ft.	Max Candela Metric	3227.4880	153.30	9521.71	62.111	21.053	A	32
Football Spill @ 5ft.	Max Vertical Illuminance Metric	0.0791	0.00	0.21	59.613	22.597	A	32
Home Bleacher	Horizontal	13.00	3	25	9.71	5.10	A	32
Visitor Bleacher	Horizontal	9.49	2	20	8.76	4.10	A	32

Guaranteed Performance: The ILLUMINATION described above is guaranteed per your Musco Warranty document.

Field Measurements: Individual field measurements may vary from computer-calculated predictions.

Electrical System Requirements: Refer to Amperage Draw Chart and/or the **"Musco Control System Summary"** for electrical sizing.

Installation Requirements: Results assume ± 3% nominal voltage at line side of the driver and structures located within 3 feet (1m) of design locations.

We Make It Happen.

ENGINEERED DESIGN By: Cody Clark • File #156970C • 27-Mar-26

Not to be reproduced in whole or part without the written consent of Musco Sports Lighting, LLC.
©1981, 2026 Musco Sports Lighting, LLC.

Trimmier Park Football

Mobile,AL

Equipment List For Areas Shown

Structure				Fixtures				
QTY	STRUCTURE ID	SIZE	GRADE ELEVATION	ABOVE FIELD LEVEL	FIXTURE TYPE	QTY/POLE	THIS GRID	OTHER GRIDS
2	F1-F2	70'	-	70'	TLC-LED-1500	6	6	0
				15.5'	TLC-BT-575	2	2	0
2	F3-F4	70'	-	70'	TLC-LED-1500	6	6	0
				22.5'	TLC-BT-575	2	2	0
4	Totals					32	32	0

Above Field Level is height of fixtures above area shown

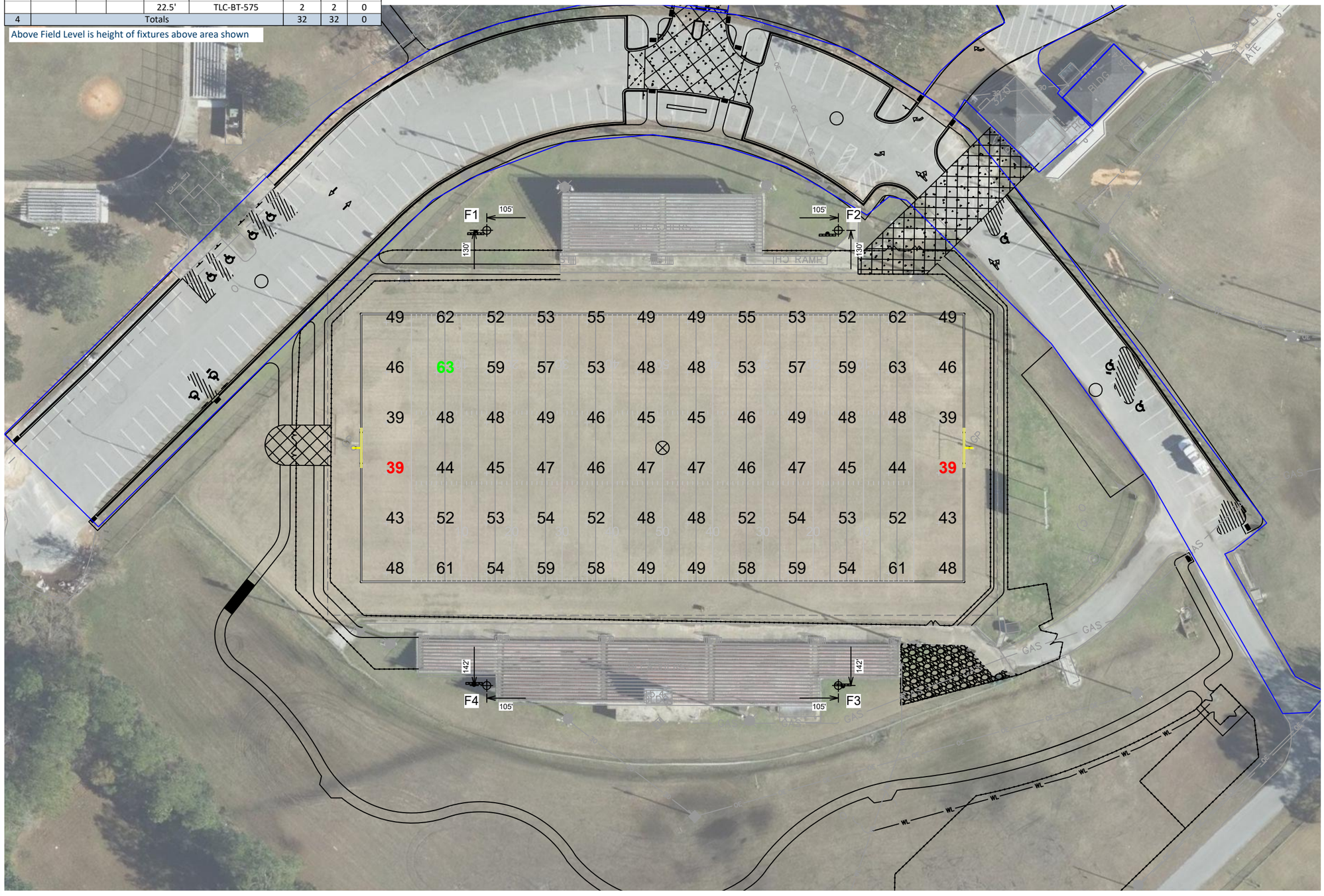

Grid Summary

Name:	**Football**
Size:	360' x 160'
Spacing:	30.0' x 30.0'
Height:	3.0' above grade

Illumination Summary

	INITIAL HORIZONTAL FOOTCANDLES
	Entire Grid
Guaranteed Average:	**50**
Scan Average:	50.53
Maximum:	63
Minimum:	39
Avg/Min:	1.31
Guaranteed Max/Min:	**2**
Max/Min:	1.64
UG (adjacent pts):	1.37
CU:	0.68
No. of Points:	72
FIXTURE INFORMATION	
Applied Circuits:	A
No. of Fixtures:	**32**
Total Load:	38.44 kW

Guaranteed Performance: The ILLUMINATION described above is guaranteed per your Musco Warranty document.

Field Measurements: Individual field measurements may vary from computer-calculated predictions.

Electrical System Requirements: Refer to Amperage Draw Chart and/or the **"Musco Control System Summary"** for electrical sizing.

Installation Requirements: Results assume ± 3% nominal voltage at line side of the driver and structures located within 3 feet (1m) of design locations.

SCALE IN FEET 1 : 60

0' 60' 120'

Pole location(s) ⊕ dimensions are relative to 0,0 reference point(s) ⊗

ENGINEERED DESIGN By: Cody Clark • File #156970C • 27-Mar-26

Not to be reproduced in whole or part without the written consent of Musco Sports Lighting, LLC.
©1981, 2026 Musco Sports Lighting, LLC.

Equipment List For Areas Shown

Structure				Fixtures				
QTY	STRUCTURE ID	SIZE	GRADE ELEVATION	ABOVE FIELD LEVEL	FIXTURE TYPE	QTY/POLE	THIS GRID	OTHER GRIDS
2	F1-F2	70'	-	70'	TLC-LED-1500	6	6	0
				15.5'	TLC-BT-575	2	2	0
2	F3-F4	70'	-	70'	TLC-LED-1500	6	6	0
				22.5'	TLC-BT-575	2	2	0
4	Totals					32	32	0

Above Field Level is height of fixtures above area shown

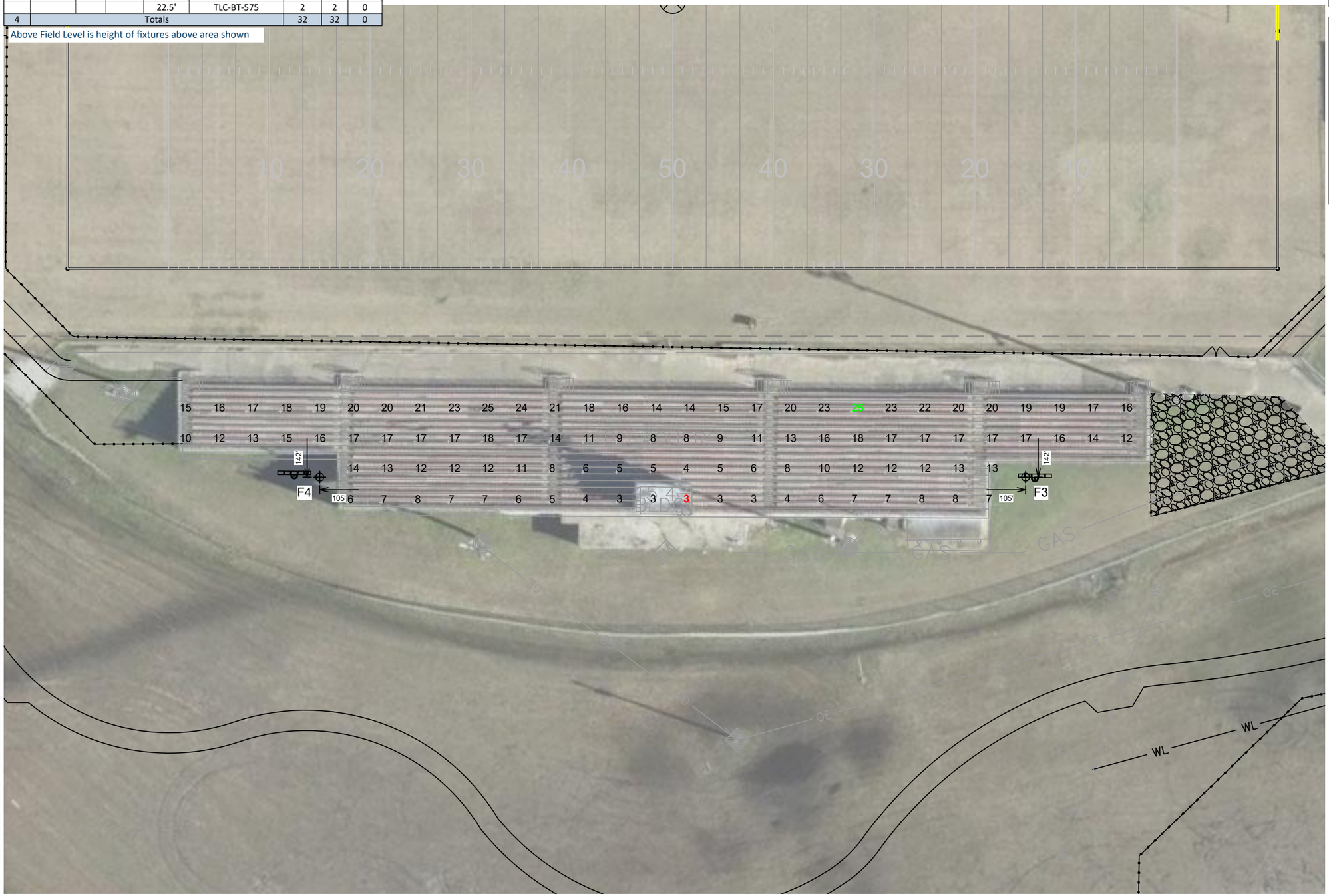

SCALE IN FEET 1 : 30

0' 30' 60'

ENGINEERED DESIGN By: Cody Clark • File #156970C • 27-Mar-26

Pole location(s) ⊕ dimensions are relative to 0,0 reference point(s) ⊠

Trimmier Park Football

Mobile,AL

Grid Summary

Name:	**Home Bleacher**
Size:	360' x 160'
Spacing:	10.0' x 10.0'

Illumination Summary

	INITIAL HORIZONTAL FOOTCANDLES
	Entire Grid
Scan Average:	**13.00**
Maximum:	25
Minimum:	3
Avg/Min:	5.10
Max/Min:	**9.71**
UG (adjacent pts):	2.16
CU:	0.02
No. of Points:	98
FIXTURE INFORMATION	
Applied Circuits:	A
No. of Fixtures:	**32**
Total Load:	38.44 kW

Guaranteed Performance: The ILLUMINATION described above is guaranteed per your Musco Warranty document.

Field Measurements: Individual field measurements may vary from computer-calculated predictions.

Electrical System Requirements: Refer to Amperage Draw Chart and/or the **"Musco Control System Summary"** for electrical sizing.

Installation Requirements: Results assume ± 3% nominal voltage at line side of the driver and structures located within 3 feet (1m) of design locations.

musco We Make It Happen.

Not to be reproduced in whole or part without the written consent of Musco Sports Lighting, LLC.
©1981, 2026 Musco Sports Lighting, LLC.

Equipment List For Areas Shown

Structure				Fixtures				
QTY	STRUCTURE ID	SIZE	GRADE ELEVATION	ABOVE FIELD LEVEL	FIXTURE TYPE	QTY/POLE	THIS GRID	OTHER GRIDS
2	F1-F2	70'	-	70'	TLC-LED-1500	6	6	0
				15.5'	TLC-BT-575	2	2	0
2	F3-F4	70'	-	70'	TLC-LED-1500	6	6	0
				22.5'	TLC-BT-575	2	2	0
4	Totals					32	32	0

Above Field Level is height of fixtures above area shown



Trimmier Park Football

Mobile,AL

Grid Summary

Name:	**Visitor Bleacher**
Size:	360' x 160'
Spacing:	10.0' x 10.0'

Illumination Summary

INITIAL HORIZONTAL FOOTCANDLES	Entire Grid
Scan Average:	**9.49**
Maximum:	20
Minimum:	2
Avg/Min:	4.10
Max/Min:	**8.76**
UG (adjacent pts):	2.00
CU:	0.01
No. of Points:	48
FIXTURE INFORMATION	
Applied Circuits:	A
No. of Fixtures:	**32**
Total Load:	38.44 kW

Guaranteed Performance: The ILLUMINATION described above is guaranteed per your Musco Warranty document.

Field Measurements: Individual field measurements may vary from computer-calculated predictions.

Electrical System Requirements: Refer to Amperage Draw Chart and/or the **"Musco Control System Summary"** for electrical sizing.

Installation Requirements: Results assume ± 3% nominal voltage at line side of the driver and structures located within 3 feet (1m) of design locations.

SCALE IN FEET 1 : 20

0' 20' 40'

Pole location(s) ⊕ dimensions are relative to 0,0 reference point(s) ⊠

ENGINEERED DESIGN By: Cody Clark • File #156970C • 27-Mar-26

Not to be reproduced in whole or part without the written consent of Musco Sports Lighting, LLC.
©1981, 2026 Musco Sports Lighting, LLC.

Equipment List For Areas Shown

Structure				Fixtures				
QTY	STRUCTURE ID	SIZE	GRADE ELEVATION	ABOVE FIELD LEVEL	FIXTURE TYPE	QTY/POLE	THIS GRID	OTHER GRIDS
2	F1-F2	70'	-	70'	TLC-LED-1500	6	6	0
				15.5'	TLC-BT-575	2	2	0
2	F3-F4	70'	-	70'	TLC-LED-1500	6	6	0
				22.5'	TLC-BT-575	2	2	0
4	Totals					32	32	0

Above Field Level is height of fixtures above area shown

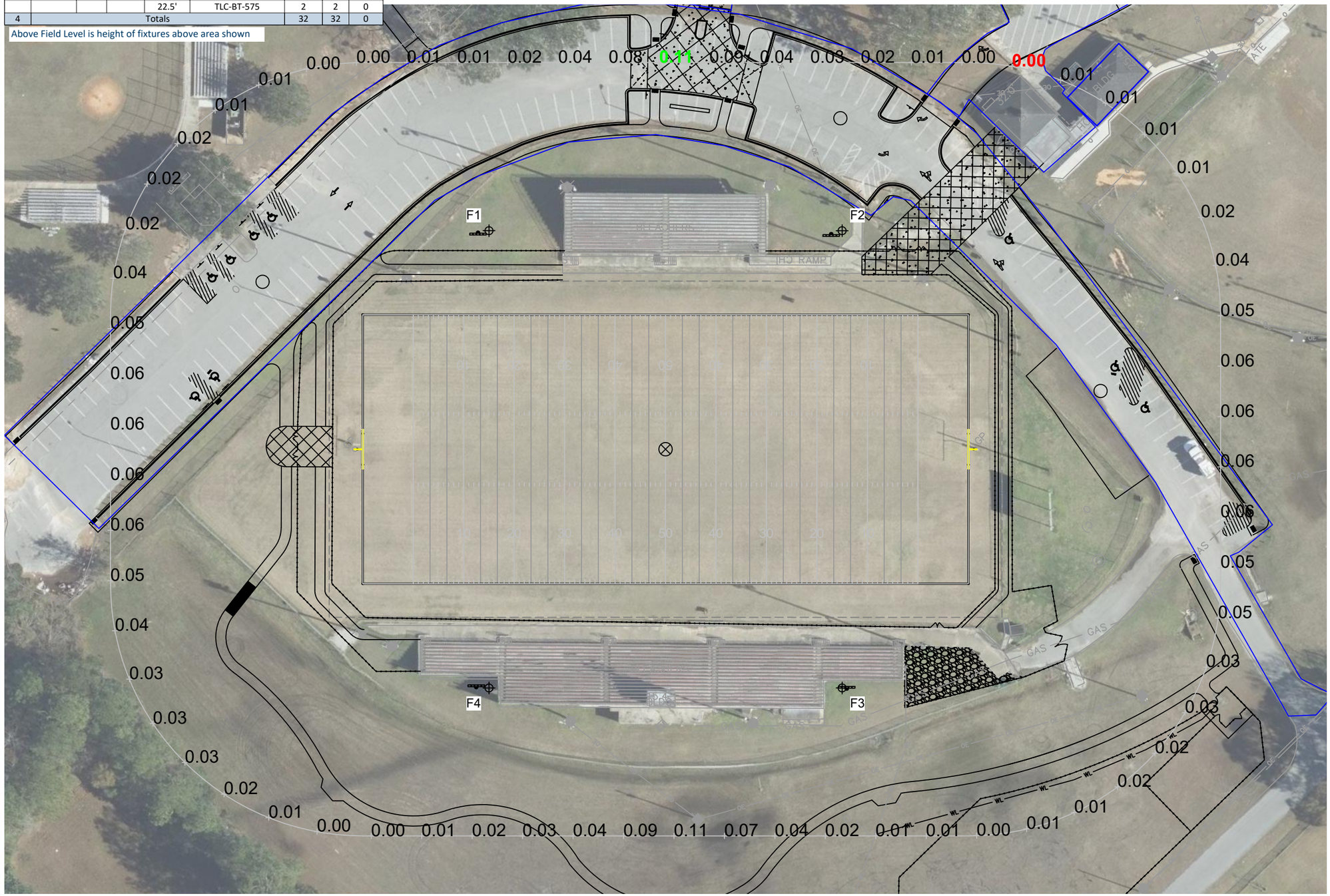

SCALE IN FEET 1 : 60

0' 60' 120'

Pole location(s) ⊕ dimensions are relative to 0,0 reference point(s) ⊠

ENGINEERED DESIGN By: Cody Clark • File #156970C • 27-Mar-26

Trimmier Park Football

Mobile,AL

Grid Summary

Name:	**Football Spill @ 3ft.**
Spacing:	30.0'
Height:	3.0' above grade

Illumination Summary

	INITIAL HORIZONTAL FOOTCANDLES
	Entire Grid
Scan Average:	**0.0328**
Maximum:	0.11
Minimum:	0.00
CU:	0.00
No. of Points:	66
FIXTURE INFORMATION	
Applied Circuits:	A
No. of Fixtures:	**32**
Total Load:	38.44 kW

Guaranteed Performance: The ILLUMINATION described above is guaranteed per your Musco Warranty document.

Field Measurements: Individual field measurements may vary from computer-calculated predictions.

Electrical System Requirements: Refer to Amperage Draw Chart and/or the **"Musco Control System Summary"** for electrical sizing.

Installation Requirements: Results assume ± 3% nominal voltage at line side of the driver and structures located within 3 feet (1m) of design locations.

Not to be reproduced in whole or part without the written consent of Musco Sports Lighting, LLC.
©1981, 2026 Musco Sports Lighting, LLC.

Equipment List For Areas Shown

Structure				Fixtures				
QTY	STRUCTURE ID	SIZE	GRADE ELEVATION	ABOVE FIELD LEVEL	FIXTURE TYPE	QTY/POLE	THIS GRID	OTHER GRIDS
2	F1-F2	70'	-	70'	TLC-LED-1500	6	6	0
				15.5'	TLC-BT-575	2	2	0
2	F3-F4	70'	-	70'	TLC-LED-1500	6	6	0
				22.5'	TLC-BT-575	2	2	0
4	Totals					32	32	0

Above Field Level is height of fixtures above area shown

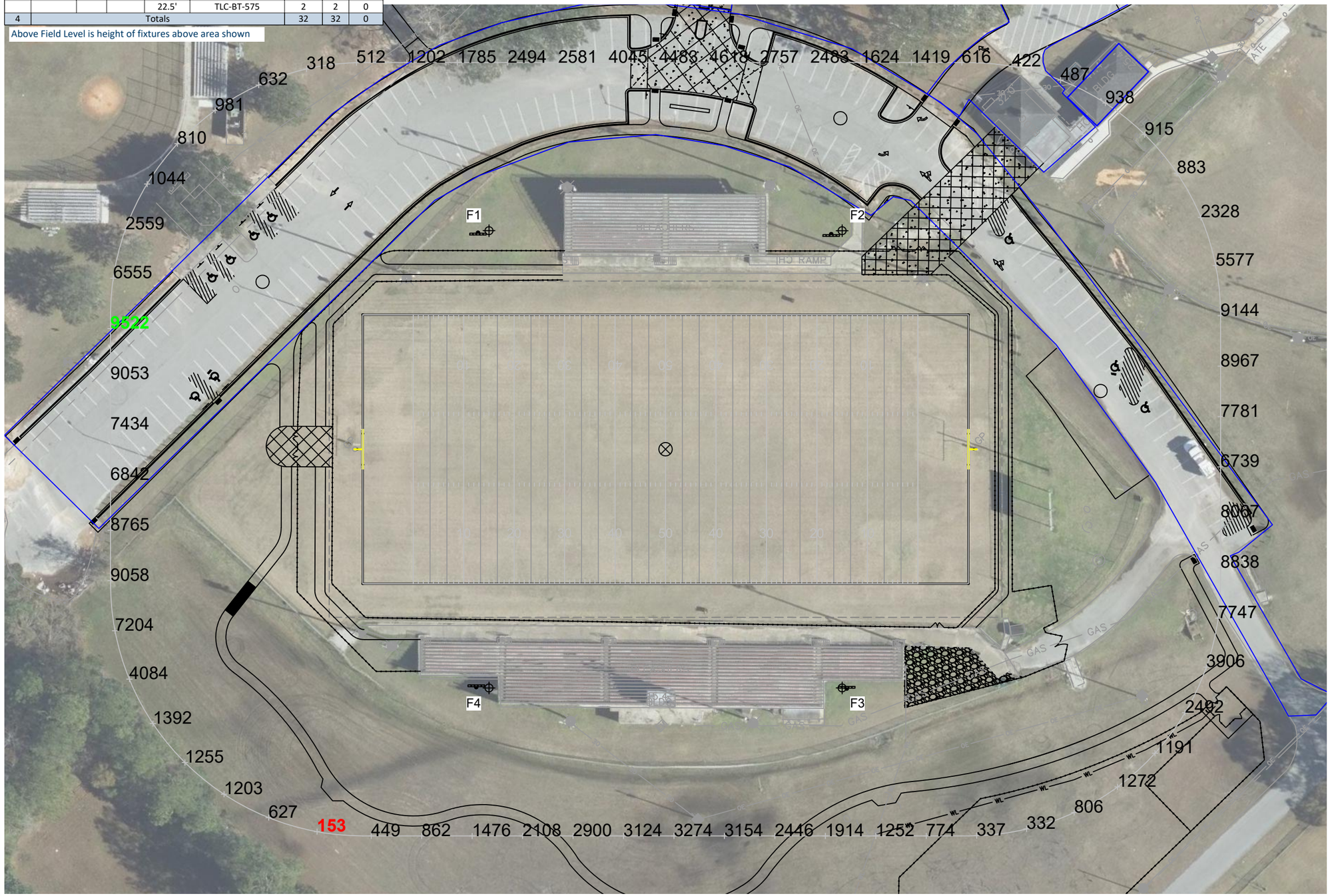

SCALE IN FEET 1 : 60

0' 60' 120'

Pole location(s) ⊕ dimensions are relative to 0,0 reference point(s) ⊠

ENGINEERED DESIGN By: Cody Clark • File #156970C • 27-Mar-26

Trimmier Park Football

Mobile,AL

Grid Summary

Name:	**Football Spill @ 5ft.**
Spacing:	30.0'
Height:	5.0' above grade

Illumination Summary

	INITIAL CANDELA (PER FIXTURE)
	Entire Grid
Scan Average:	**3227.4880**
Maximum:	9521.71
Minimum:	153.30
CU:	0.00
No. of Points:	66
FIXTURE INFORMATION	
Applied Circuits:	A
No. of Fixtures:	**32**
Total Load:	38.44 kW

Guaranteed Performance: The ILLUMINATION described above is guaranteed per your Musco Warranty document.

Field Measurements: Individual field measurements may vary from computer-calculated predictions.

Electrical System Requirements: Refer to Amperage Draw Chart and/or the **"Musco Control System Summary"** for electrical sizing.

Installation Requirements: Results assume ± 3% nominal voltage at line side of the driver and structures located within 3 feet (1m) of design locations.

musco We Make It Happen.

Not to be reproduced in whole or part without the written consent of Musco Sports Lighting, LLC.
©1981, 2026 Musco Sports Lighting, LLC.

Equipment List For Areas Shown

Structure				Fixtures				
QTY	STRUCTURE ID	SIZE	GRADE ELEVATION	ABOVE FIELD LEVEL	FIXTURE TYPE	QTY/POLE	THIS GRID	OTHER GRIDS
2	F1-F2	70'	-	70'	TLC-LED-1500	6	6	0
				15.5'	TLC-BT-575	2	2	0
2	F3-F4	70'	-	70'	TLC-LED-1500	6	6	0
				22.5'	TLC-BT-575	2	2	0
4	Totals					32	32	0

Above Field Level is height of fixtures above area shown

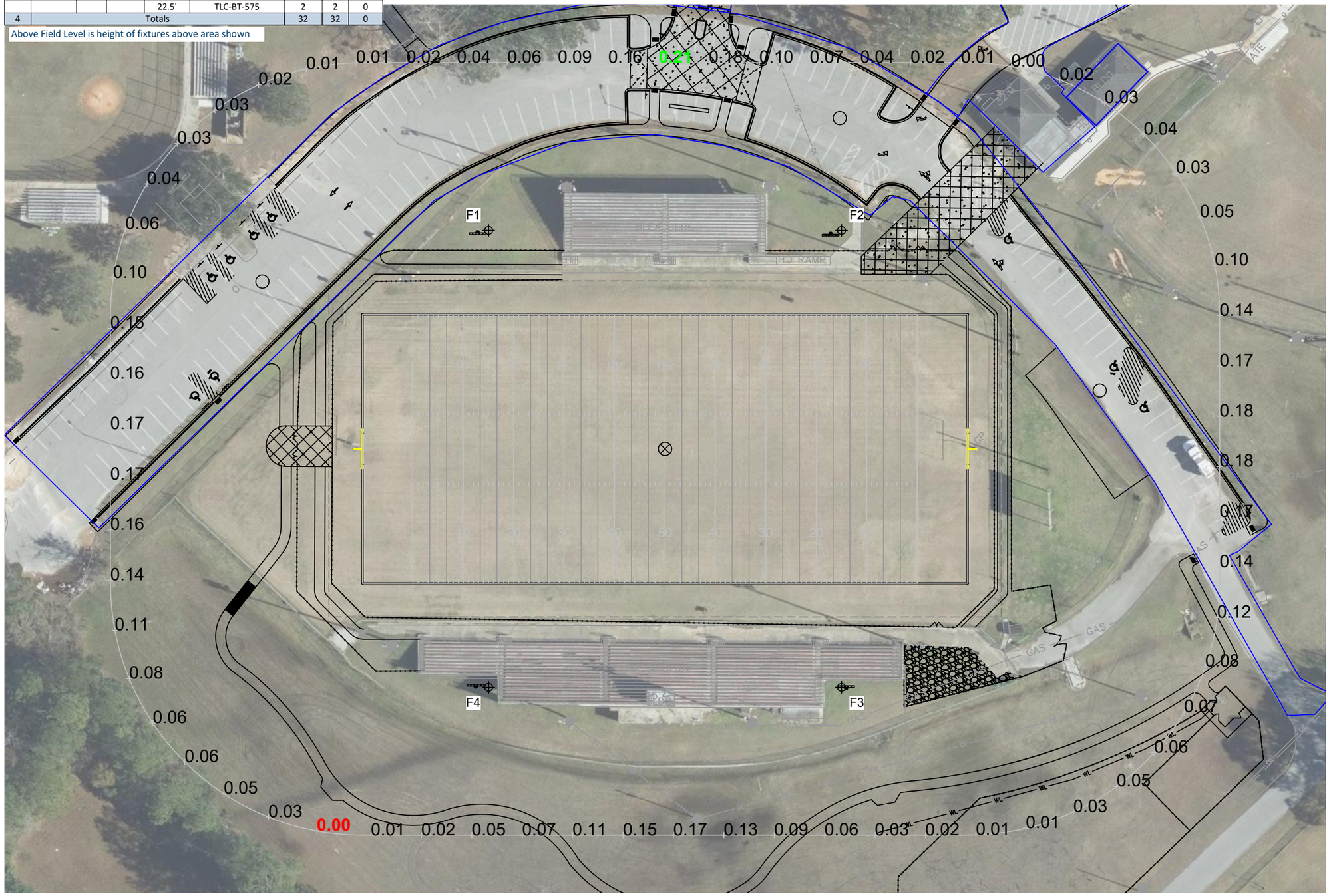

Trimmier Park Football

Mobile,AL

Grid Summary

Name:	**Football Spill @ 5ft.**
Spacing:	30.0'
Height:	5.0' above grade

Illumination Summary

	INITIAL MAX VERTICAL FOOTCANDLES
	Entire Grid
Scan Average:	**0.0791**
Maximum:	0.21
Minimum:	0.00
CU:	0.00
No. of Points:	66
FIXTURE INFORMATION	
Applied Circuits:	A
No. of Fixtures:	**32**
Total Load:	38.44 kW

Guaranteed Performance: The ILLUMINATION described above is guaranteed per your Musco Warranty document.

Field Measurements: Individual field measurements may vary from computer-calculated predictions.

Electrical System Requirements: Refer to Amperage Draw Chart and/or the **"Musco Control System Summary"** for electrical sizing.

Installation Requirements: Results assume ± 3% nominal voltage at line side of the driver and structures located within 3 feet (1m) of design locations.

SCALE IN FEET 1 : 60

0' 60' 120'

Pole location(s) ⊕ dimensions are relative to 0,0 reference point(s) ⊠

ENGINEERED DESIGN By: Cody Clark • File #156970C • 27-Mar-26

Not to be reproduced in whole or part without the written consent of Musco Sports Lighting, LLC.
©1981, 2026 Musco Sports Lighting, LLC.

Trimmier Park Football

Mobile,AL

Equipment Layout

INCLUDES:
· Football

Electrical System Requirements: Refer to Amperage Draw Chart and/or the **"Musco Control System Summary"** for electrical sizing.

Installation Requirements: Results assume ± 3% nominal voltage at line side of the driver and structures located within 3 feet (1m) of design locations.

Equipment List For Areas Shown

Structure				Fixtures		
QTY	STRUCTURE ID	SIZE	GLOBAL ELEVATION	ABOVE GLOBAL LEVEL	FIXTURE TYPE	QTY/POLE
2	F1-F2	70'	-	70' 15.5'	TLC-LED-1500 TLC-BT-575	6 2
2	F3-F4	70'	-	70' 22.5'	TLC-LED-1500 TLC-BT-575	6 2
4	Totals					32

Above Global Level is height of fixtures above design (0,0,0)

Single Fixture Amperage Draw Chart

Driver Specifications (.90 min power factor)	Line Amperage Per Fixture (max draw)						
Single Phase Voltage	208 (60)	220 (60)	240 (60)	277 (60)	347 (60)	380 (60)	480 (60)
TLC-LED-1500	8.4	7.9	7.3	6.3	5.0	4.6	3.6
TLC-BT-575	3.3	3.2	2.9	2.5	2.0	1.8	1.5

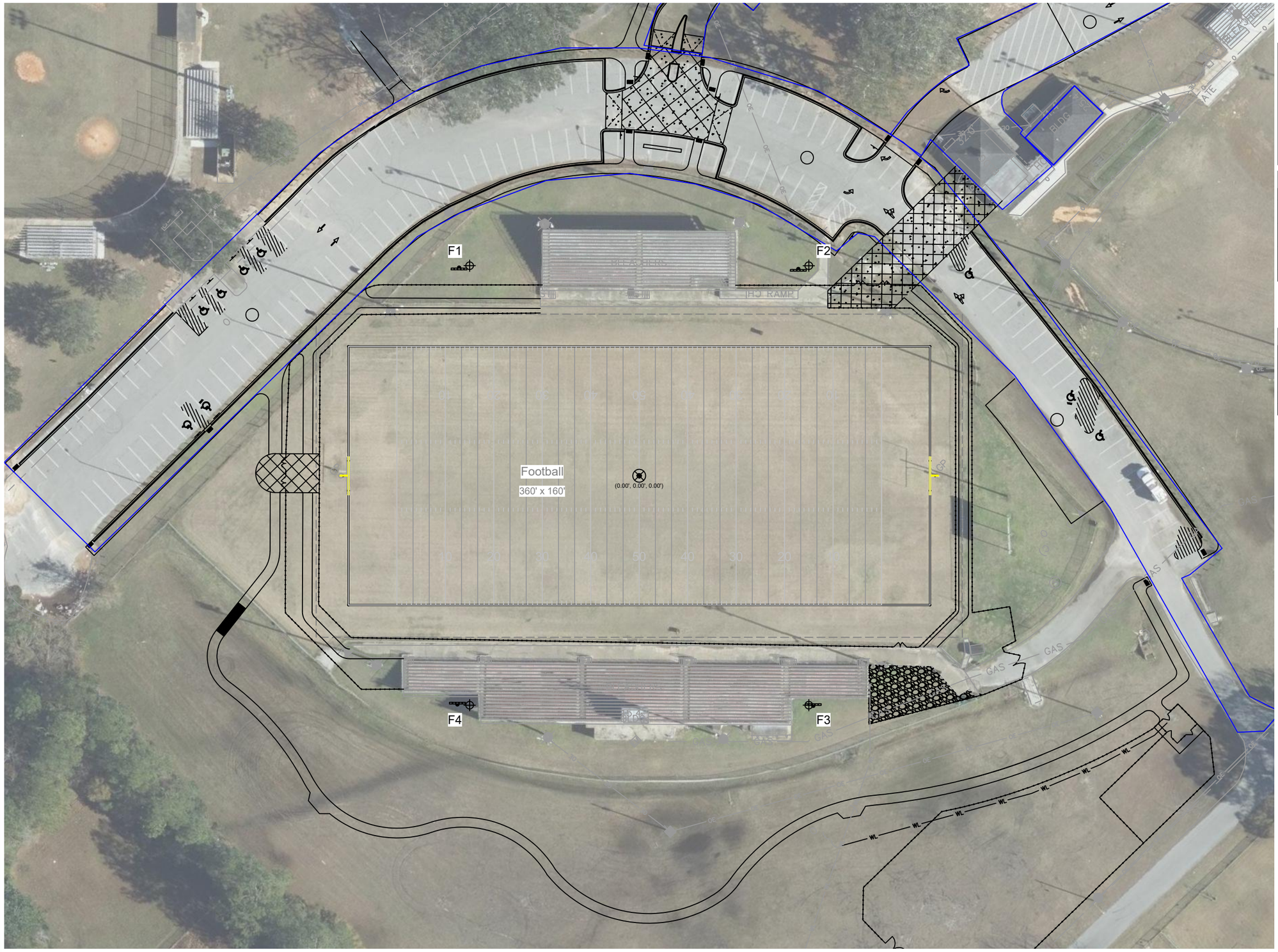

SCALE IN FEET 1 : 60

0' 60' 120'

Pole location(s) ⊕ dimensions are relative to 0,0 reference point(s) ⊠

ENGINEERED DESIGN By: Cody Clark • File #156970C • 27-Mar-26

Not to be reproduced in whole or part without the written consent of Musco Sports Lighting, LLC.
©1981, 2026 Musco Sports Lighting, LLC.

System Requirements: Control System Summary

Preliminary Plans: Confirm all details - see Note 1

Project Information

Control System

Control System ID:	1 of 1
Control System Type:	Control-Link® Control and Monitoring System
Communication Type:	PowerLine-ST

Power Requirements

Control cabinet(s):	
Control voltage (phase to neutral)	120/60
VA loading - Inrush	1553.0
VA loading - Sealed	180.0
Lighting Circuits:	
Voltage/Hertz/Phase	480/60/3

Project Notes:

Equipment Listing		
Description	**Qty**	**Size (in)**
Control and monitoring cabinet - primary	1	24 X 48
Contactors, 30 amperes	4	-
Off/On/Auto switches	1	-

Important Notes:

1. Please confirm that the lighting circuit voltage listed above is accurate for this facility. This is the voltage/phase being connected and utilized at each lighting pole's electrical components enclosure disconnect. Inaccurate voltage/phase can result in additional costs and delays. Contact your Musco sales representative to confirm this item.
2. In a 3 phase design, all 3 phases are to be run to each pole location. Musco's single phase luminaires come pre-wired to utilize all 3 phases across the entire facility.
3. One contactor is required for each circuit at each pole location. Contactors are 3 pole and 100% rated for the published continuous load.
4. If the lighting system will be fed from more than one distribution location, additional equipment may be required. Contact your Musco sales representative.
5. Size overcurrent devices using the full load amps column of the Circuit Summary by Switch chart (Minimum power factor is 0.9). Size conduit per code unless otherwise specified as larger to allow for harness connectors.
6. Avoid use of in-ground junction/pull boxes when possible. If used, the following best practices must be followed:
   • Underground handholes (pull boxes) must be supported to prevent settling. Boxes buried directly in soil, without support, are not allowed.
   • Use polymer concrete lids marked with ELECTRIC for underground handholes. Steel lids are not allowed.
   • Avoid underground connections when possible. If used, all wire connectors must be UL listed for Wet Locations to prevent leakage current.
7. Control power wiring must be in separate conduit from line or load power wiring. Communication cables must be in separate conduit from any power wiring.
8. Test wire per ANSI/NETA ATS-2021. Wires with insulation resistance less than 100 MOhms, in water-filled conduit, must be replaced.
9. Refer to Installation Instructions for more details on equipment information and the installation requirements.

Equipment Layout and Connection Details

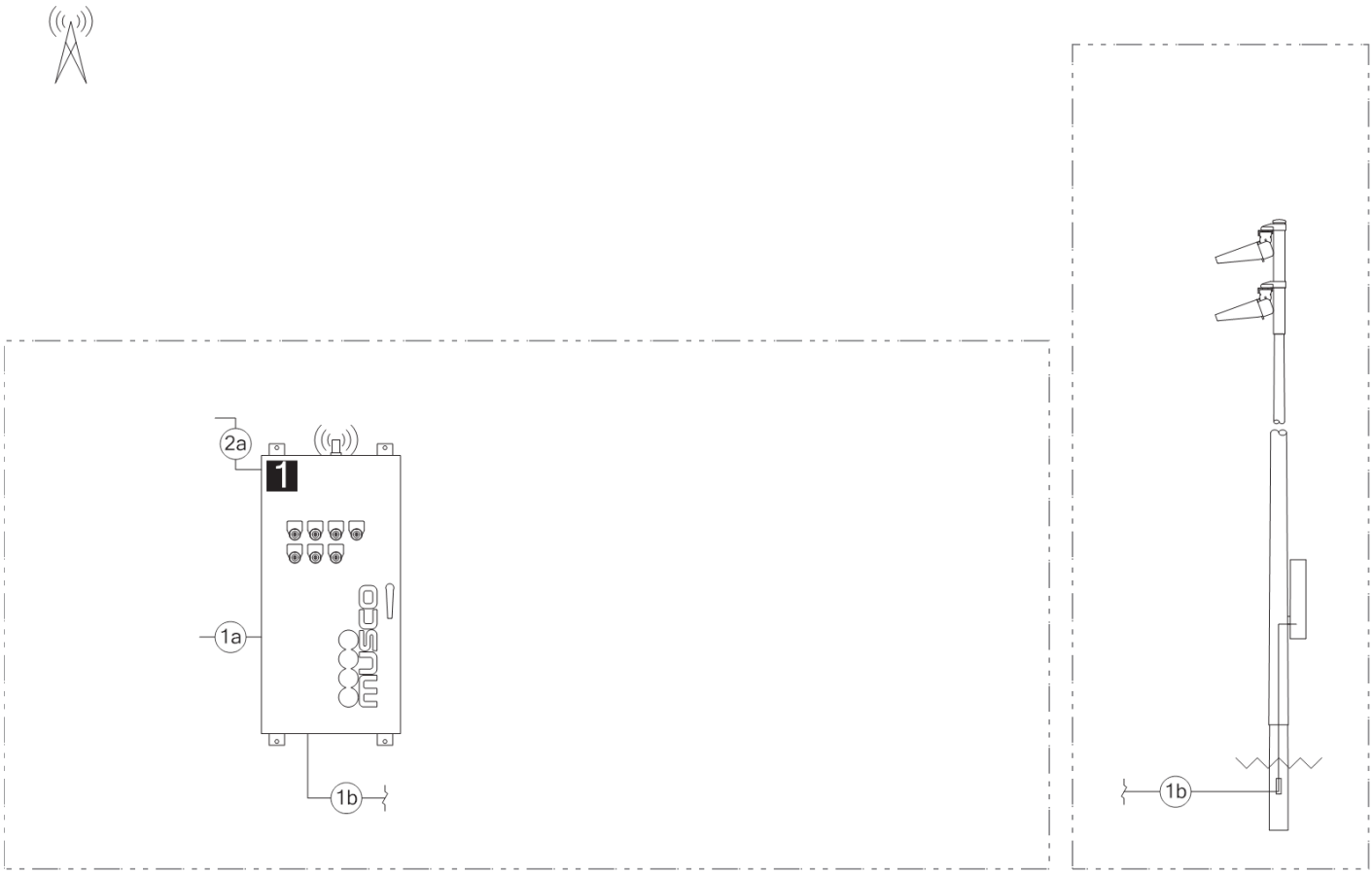

Connection Details	
ID	**Description**
1a	Line power to contactors, and equipment grounding conductor. Requires one circuit per contactor, size wiring per load and voltage drop.
1b	Load power from contactors, and equipment grounding conductor. Requires one circuit per contactor, size wiring per load and voltage drop.
2a	Control power with equipment ground to control cabinet. Requires dedicated 20 A circuit. Provide transformer if control voltage not present.

Equipment	
ID	**Description**
1	Control and monitoring cabinet - primary

System Requirements: Control System Summary

Project Name: Trimmier Park Football | Project #: 156970
Control System ID: 1 of 1
Distribution Panel Location/ID: Trimmier Park

Circuit Summary

Zone Schedule		Switch Location
Field/Zone Description	Zone	
Football	1	Cabinet 1

Control Module ID: 1

Lighting Circuit Voltage: 480/60/3

Circuit Summary by Switch							
Switch	Zone Description	Pole ID	Qty of Fixtures	Full load amperes	Contactor Size (Amps)	Cabinet #	Contactor ID
1	Football	F1	8	15.09	30	1	C1
	Football	F2	8	15.09	30	1	C2
	Football	F3	8	15.09	30	1	C3
	Football	F4	8	15.09	30	1	C4

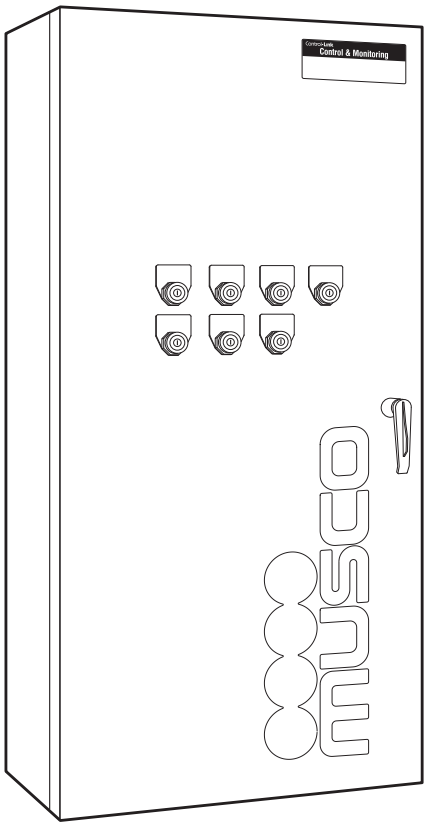

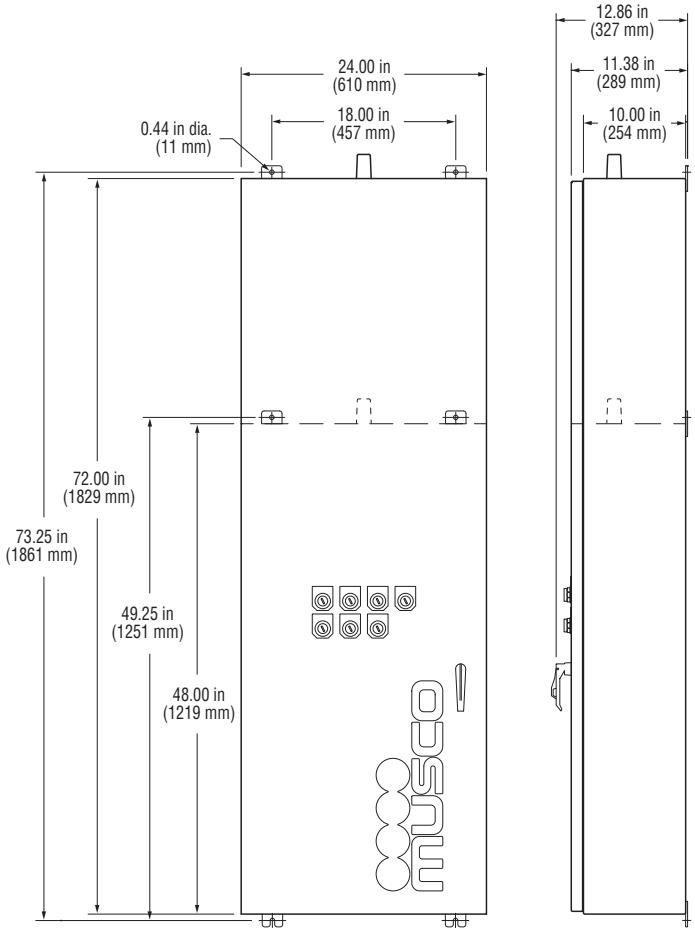

Overview

Control-Link® control and monitoring system provides flexible remote on/off control, monitoring, and management of your lighting system.

Features

Control

- Lighting system and auxiliary equipment
- Customized on/off control via phone, website, smartphone application, email, or fax up to 10 years in advance
- Multi-level user security settings
- Key-activated on/off/auto switches allow manual or automated control
- Seven controllable lighting zones

Monitoring

- Detects lamp outages and other issues that affect light quality

Management and Support

- Control-Link Central™ service center provides support 24 hours a day, 7 days a week for scheduling, monitoring, and reporting
- Luminaire outage notification within the next business day
- Customized usage reports through website

Technical Specifications

Ratings

UL 508A Listed E204954

FCC Part 15 ..... Class A compliant

Operating temperature ..... -4 ˚F to 140 ˚F (-20 ˚C to 60 ˚C)

Weight for 72 inch (1829 mm) cabinet ..... 180 lb (82 kg)

Weight for 48 inch (1219 mm) cabinet ..... 140 lb (64 kg)

Short Circuit Current Rating (SCCR)

with 30 A contactors* ..... 18 kA

with 60 or 100 A contactors* ..... 25 kA

*Minimum circuit breaker interrupt rating must be greater than or equal to SCCR rating listed above.

©2012, 2013 Musco Sports Lighting, LLC · Control-Link® is a registered trademark of Musco Corporation in the United States. U.S. patents issued and pending. · M-1136-enUS-3

Technical Specifications

Construction

- NEMA type 4 cabinet
- Powder-coated aluminum 5052 H32 cabinet and panel
- Lockable, 3-point latch
- Supports lighting system voltage up to 480 V
- Requires 120 V phase-to-neutral control voltage
- Protective cover isolates high voltage

Internal Details

- Factory wired, programmed, and tested
- Internally fused
- Control power terminal blocks provided
- One control circuit operates entire cabinet
- Plug-in wire harnesses provided to connect multiple cabinets

Control Module

Receives and stores schedules from Control-Link Central™ service center, operates your equipment, and verifies schedules were carried out.

- Stores and executes schedules for up to 7 days
- Reboots automatically and executes current schedule when power is restored, in case of power interruption

Monitoring Modules

Monitors Musco lighting system and reports issues to keep facilities operating and to help plan routine maintenance. Alerts Control-Link Central service center to schedule appropriate action or maintenance.

Communication Module

Integrated communication system providing two-way reliable, high speed communication to Control-Link Central service center with no additional monthly charges during warranty period.

Contactor Modules

Switches equipment based on control module schedules.

- Tested and UL-listed for continuous operation at 100% of rated current
- Contactors rated for 30, 60, or 100 A

Ground Bar

Provides integral ground bar for lighting equipment grounding.

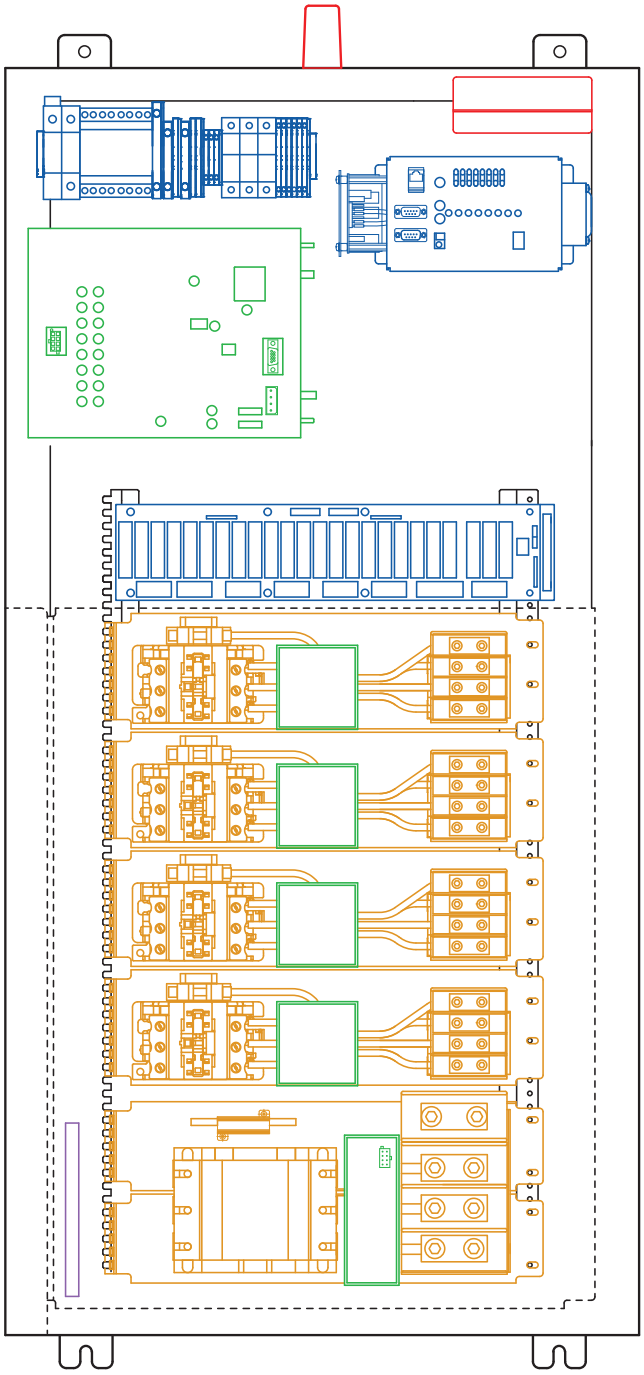

©2012, 2013 Musco Sports Lighting, LLC · Control-Link® is a registered trademark of Musco Corporation in the United States. U.S. patents issued and pending. · M-1136-enUS-3

Light·Structure System™

5 Easy Pieces™

Complete System from Foundation to Poletop

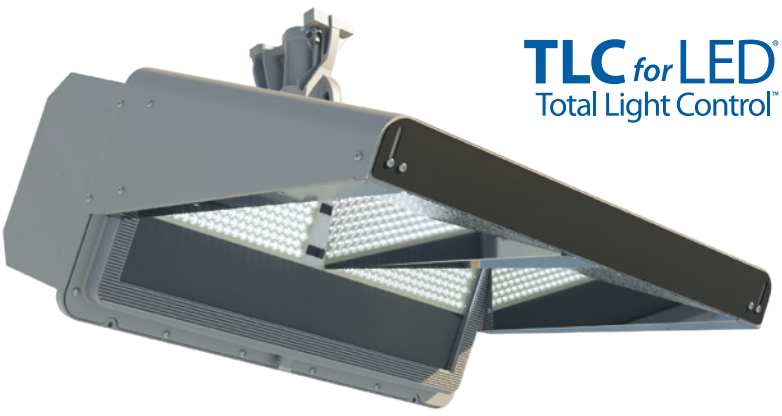

TLC for LED®
Total Light Control™

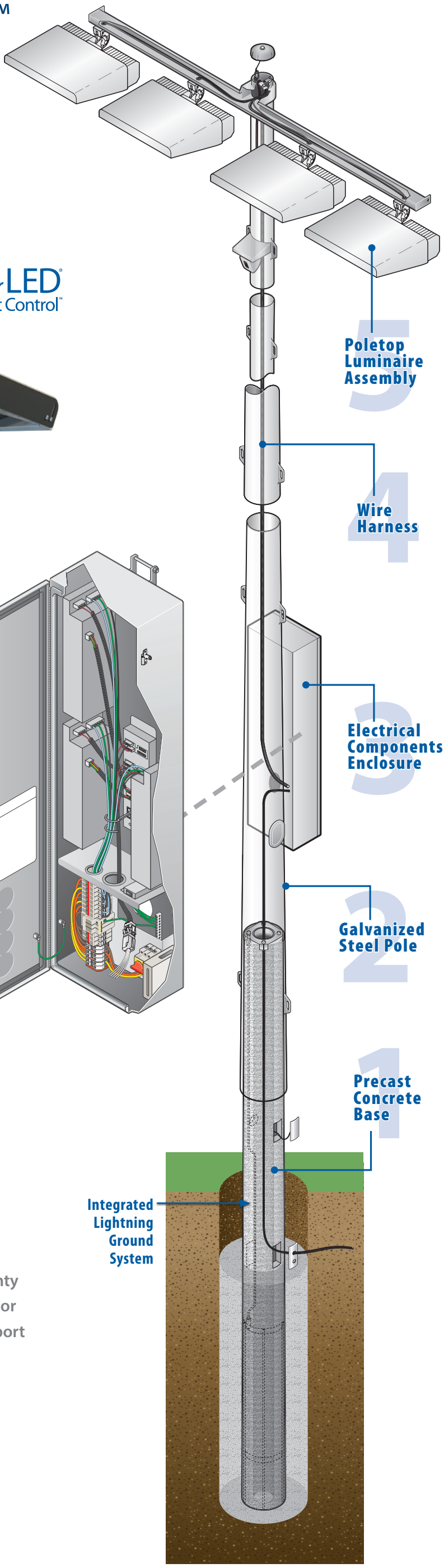



All components designed to work together . . .
factory built, wired, aimed, and tested
to assure reliable, trouble-free operation

Covered by a 25-year product assurance and warranty program with guaranteed light levels, parts and labor for maintenance, system monitoring, and 24/7 support from our Control-Link Central™ service center.

For your BUDGET, for the ENVIRONMENT.

www.musco.com
lighting@musco.com

©1993, 2019 Musco Sports Lighting, LLC • M-1779-enUS-6 • TLC-LED-1500 • U.S. and foreign patents issued and pending.

We Make It Happen.

Addendum No. 1

To: Pre-Quote Meeting Attendees and Registered Plan holders

From: Chuck Babin, Elizabeth Miller
City of Mobile Architectural Engineering Department

Re: Trimmier Park – Football Stadium Lighting
Project #PR-068-24

Date: May 26, 2026

This Addendum forms a part of, and modifies, the Request for Quotes for the above referenced project, dated May 20, 2026. Acknowledge the receipt of this Addendum No. 1 and all subsequent Addenda, if any, in the space provided on the Quote Form. Failure to do so may subject Quoter to disqualification.

General:

Clarifications:

Item 1. The Pre-Quote Meeting Agenda ***with Modifications*** and Pre-Quote Meeting Acknowledgment Roster, dated May 26, 2026, are attached and form part of Addendum No. 1. Revisions to the Pre-Quote Agenda are indicated with a strike-through for deletions and ***bold italic*** typeface for additions.

Item 2. The cover of the Project Manual has been updated to list the Bid due date as June 3, 2026.

Item 3. The duplicate version of AIA document A701 is to be removed. Section 3.3.2.1 Substitution Process has been edited to require substitutions to be tuned in within seven days (7) prior to Bid date. Additional typos have been edited in Sections 3.1.1, 3.3.3, and 4.3.1.

Item 4. The order of precedence has been clarified in AIA document A101, Article 1 Contract Documents.

Item 5. The Musco plans cover has a clarification added stating that the plans that Manufacturer literature, calculations, control system summaries, and reference documents are provided

solely for informational purposes and shall not constitute Contract Documents unless expressly incorporated by written amendment.

Item 6. The Contractor is to disconnect, remove, and demolish the existing Football Field Scoreboard down to the concrete base. The existing associated underground conduit is to be cut 24" below finished grade minimum. Existing conductors to be completely removed.

Item 7. The Contractor is to ensure all fees associated with Alabama Power Company work are included in the bid.

Forms and Specifications: N/A

Drawings:

Item 1. Replace drawing sheet titled T101 Title Sheet and dated 05.20.26 with the one attached by the same title dated 05.26.26.

RFI's: N/A

ATTACHMENTS

1. Pre-Bid Meeting Agenda ***with Modifications***
2. Pre-Bid Meeting Attendance Roster
3. Cover Sheet for Project Manual ***with Modifications***
4. AIA Document A701 ***with Modifications***
5. AIA Document A101 ***with Modifications***
6. Musco Plans cover sheet ***with Modifications***
7. T101 TITLE SHEET, Addendum #1

END OF ADDENDUM NO. 1

Trimmier Park
Football Field Lighting
PR-068-24

PRE-BID CONFERENCE

9:00 am May 26, 2026,
3600 Alba Club Drive, Mobile, Alabama 36605

AGENDA

1. Attendance roster. Include a contact person and an e-mail address where any Addenda should be sent. Please write legibly.

2. Introductions - Owner Contacts, Architect & Consultants, AE Project Manager.

3. Pre-Bid requirements: In order to submit a bid, contractors shall be required to obtain a project manual to be on the bidder's list A. pre-bid qualifications & construction quality requirement form is also required to be include with the bid.

4. Discussion of Scope of Work.
    a. The project consists of the installation of upgraded electrical services with new football field lighting and a new scoreboard.
    b. There is a $20,000.00 Contingency Allowance. Allowances shall be utilized only after advance written approval by the Owner. At the end of the project, remaining contingency will be returned to the City via Change Order.
    c. Protect all existing non-moveable items through the course of construction. Verify with Project Manager if non-moveable item is in conflict with work areas.
    d. Contractor must obtain permits and arrange for all permit inspections required by the City of Mobile. There is no charge for the Permit. Subcontractors will need to obtain their own permits.
    e. Before Bidding, Contractor shall verify their license classification of their General Contractors license with the State of Alabama Licensing Board.
    f. Contractor shall have access to the site seven days a week, 7:00 am until 7:00 pm unless approved differently by Project Manager.
    g. Contractor shall keep an exceptionally clean site. The park will continue to operate during normal business hours. All Construction and lay down areas must be protected from public and City of Mobile staff.
    h. Contractor may utilize, without cost: power, electricity, toilet, and handwashing facilities, etc. if available in moderation.
    i. Protect all concrete sidewalks, pads and paving. Contractor shall be responsible for re-pouring any concrete cracked or damaged throughout the course of the work. It is advised that the Contractor document the area before beginning Construction.
    j. Contractor shall protect all non-paved surfaces from damage. Use of equipment pads is highly recommended. Any damage done to grassed areas shall be re-sodded by the contractor in like or better kind prior to substantial completion.

k. Remove waste, spoils, surplus materials, rubbish, and construction facilities from the site. On-Site Dumpster location to be coordinated with Owner Contact. Do not use facilities waste bins or dumpsters. Site must be kept clean.
l. Storm and Wastewater:
    i. Comply with City of Mobile and Alabama Department of Environmental Management requirements. Pay attention to Water Regulations and Allowable Discharges.
    ii. See City of Mobile Code, Chapter 17, Storm Water Management and Flood Control.
m. Any observed ambiguities, discrepancies, omissions or errors in any part of the contract documents shall be submitted as written RFIs to Christina Marie at Christy@jagcon.org.
n. Cut off time for submission of RFIs is by 3:00 pm 7 days before the bid opening date. All requests are to be submitted via e-mail to the consultant at Christy@jagcon.org.
o. Cut off time for substitution requests is by 3:00 pm 7 days before the bid opening date. Substitution approvals are Pre-Bid only. All requests are to be submitted via e-mail to Christina Marie at Christy@jagcon.org.
p. Official clarifications or corrections will be made by written addendum sent to all registered prospective bidders via e-mail. Only clarifications immortalized in Addendums are valid.
q. The City of Mobile will provide utility line locations within the work area of the park. Contractor shall still be responsible for contacting line locators for verification.

5. Special Instructions or conditions.

a. Equal Opportunity:
    i. The City of Mobile, Alabama is an Equal Opportunity Employer and requires that all Contractors comply with the Equal Employment Opportunity laws and the provisions of the Bid Documents in this regard.
    ii. The City of Mobile also encourages and supports the utilization of Minority Business Enterprises on these and all other publicly solicited Bids and shall be in compliance with the City of Mobile's Minority Utilization Plan as adopted by the City Council.
    iii. The Contractor shall provide an appropriately completed copy of the "City of Mobile Subcontracting and Major Supplier Plan" in the envelope with their Bid Form. Form shall document DBE Subcontractors participating in the project and, should the total % of DBE participation not meet the 15% minimum, all efforts to obtain DBE Subcontractors shall be documented on or attached to the DBE Form when submitted.
    iv. During construction, contractors are required to submit a "DBE Utilization Report" with every Pay Application.
    v. Contractors should contact the City of Mobile, Supplier Diversity Manager for assistance with DBE Subcontractor information and any questions regarding the DBE Compliance Forms. Contact Archnique Kidd at 251-208-7967.
b. City of Mobile permits are required for the construction, but are available without cost to the Contractor. General Contractor, Plumbing Contractor, and Electrical Contractor shall have a current $10,000 Surety Bond on file with the City of

Mobile Permitting Division prior to issuance of permits and throughout the contract duration.

6. Bidding instructions, forms, special requirements and time.
    a. Sealed Bids will be received and clocked in until 2:00 PM local time, Wednesday, the 3rd day of June 2026.
        i. Due to restricted access to Government Plaza offices, it is recommended that Bids be sent by U.S. Postal Service to Office of the City Clerk, PO Box 1827, 36633-1827, if sent by regular mail. Bidders are responsible for ensuring their bids arrive by the bid time and date.
        ii. Or, if sent by another carrier, addressed to the City Clerk, 9TH floor South Tower, Government Plaza, 205 Government Street, Mobile, Alabama 36602. Bidders are responsible for ensuring their bids arrive by the bid time and date.
        iii. Bidders delivering Bids in person shall insert sealed Bids into a receptacle, marked “City of Mobile Bids”, located in the elevator lobby outside the office of the City Clerk Office, 9th Floor South Tower, Government Plaza, 205 Government Street, Mobile, Alabama 36602.
    b. All Bids not clocked in by the City Clerk’s Office prior to the time specified, or Bids received after the specified time, will be automatically rejected, and returned immediately, unopened.
    c. Bids will be publicly opened and read at 2:30 PM local time, in the Atrium Lobby of Government Plaza.
    d. <u>This is a tax-exempt project.</u> As per the State of Alabama ACT 2013-205, the Alabama Department of Revenue (ADOR) has been granted the authority to issue a “Certificate of Exemption from Sales and Use Tax for Governmental Entities” on construction projects. Therefore, this project shall qualify for State of Alabama Sales and Use Tax Exemptions under this ACT. It is the responsibility of the Bidder to confirm the potential tax exempt status of their bid with the ADOR and include any such savings in their bid, as well as accounting for same on their bid form attachment Sales Tax Form C-3A.

7. Additional Requirements at time of Contract execution:
    a. A valid City of Mobile business license for the duration of the contract period
    b. E-verify Documentation: The Beason-Hammond Taxpayer Protection Act applies to this project. Contractor shall comply with the requirements of this Act and show proof of enrollment in the E-verify program by submitting the electronically generated Federal E-verify document prior to signing of the construction contract. (see Project Manual)
    c. Performance Bond and Labor & Material Payment Bond are required.
    d. Certificate of Insurance in amounts and with endorsements as required by the City of Mobile (see Project Manual or Request for Quotes documents).
    e. Builder's Risk Insurance:
        i. ALL RISK Builder's Risk coverage shall be provided for the Contractor, Owner and all SubContractors for the full amount of the Contract during construction, fabrications, storage, transport and erection of any equipment.
        ii. Policy provisions and the Certificate of Insurance shall be provided to the Owner.

8. Payment requirements.
    a. Retainage withheld at 5% of the first 50% of Construction Completed until the amount equals 2.5% of the full contract amount.
    b. The final 2.5% of the full contract amount is withheld as retainage until all close out requirements are met, proof of advertisement, warranties, Consent of Surety, and release of liens, etc. By State of Alabama Law, notice of final completion of the contract shall be published three times in a local newspaper of general circulation.
    c. The City of Mobile is unable to issue payment or deposits on materials that are not on the project site, or in the City of Mobile stored in a climate controlled, bonded warehouse where a City representative can verify their presence and proper storage.

9. Owner/City of Mobile contacts and phone numbers:
    a. Chuck Babin: 251-489-4888 (Architectural Engineering Department Project Manager)
    b. Elizabeth Miller: 251-406-2678 (Architectural Engineering Department Project Manager)

10. Addendum

    a. Bid date has been updated on the cover page of the project manual.
    b. MUSCO Lighting Drawings are for Reference only and do not supersede the stamped engineered drawings.

11. Walk of Site

12. Adjourn

ATTENDANCE ROSTER

MEETING	PROJECT	LOCATION	DATE
Mandatory Pre-Bid	Trimmier Park Lights Upgrades	3600 Alba Club Drive, Mobile, AL 36605	Tuesday, May 26, 2026

FD-034-25

NAME	ORGANIZATION	PHONE	FAX	CELL PHONE	E-MAIL
Chuck Babin	City of Mobile	251-208-6035			chuck.babin@cityofmobile.gov
Elizabeth Miller	City of Mobile	251-208-7627			elizabeth.miller@cityofmobile.gov
Christina Marie CM	Jaguar Consulting			251-455-9189	christy@jagcon.org
Tommy McNicoll TM	Jaguar Consulting			251-586-7443	tommy@jagcon.org
✓ James Russell	Barter Enginering	251-391-0815		251-391-0815	✓ jrussell@barterse.com
Tim Forgey	Bill Smith Electric	2513495724			TimC billsmithelectric.com

PROJECT MANUAL

FOR

Trimmier Park
Lights Upgrades

3600 Alba Club Road
Mobile, Alabama 36605

Project #PR-068-24

May 20, 2026
ADDENDUM #1, DATED MAY 26, 2026

City of Mobile
Architectural Engineering Department
205 Government Plaza
P.O. Box 1827
Mobile, Alabama 36633-1827

Bid Date: ~~May 26~~ *June 3*, 2026

SECTION 00200

INSTRUCTIONS TO BIDDERS

ADDENDUM #1, DATED MAY 26, 2026

PART 1 GENERAL

A. This section includes the INSTRUCTIONS TO BIDDERS, AIA Document A701 to be utilized with the Owner's most recent modifications and which shall be used in conjunction with the entire Bid Documents and Section 00300 SUPPLEMENTARY INSTRUCTIONS TO BIDDERS for this project.

(DUPLICATE A701 WAS OMITTED FROM MANUAL)

AIA® Document A701® – 2018

Instructions to Bidders

for the following Project:
(Name, location, and detailed description)

CIP Trimmier Park Lights Upgrade
3600 Alba Club Road
Mobile, AL 36605
F584-001 UPGRADING THE LIGHTING SYSTEM FOR SAFETY IN THE FOOTBALL FIELD AREA

THE OWNER:
(Name, legal status, address, and other information)

City of Mobile
Real Estate Asset Management Department
P. O. Box 1827
Mobile, AL 36633-1827

THEDESIGN CONSULTANT:
(Name, legal status, address, and other information)

Jaguar Consulting, LLC
8658 Capital Drive North
Mobile, AL 36695
251-307-1037

TABLE OF ARTICLES

1 DEFINITIONS

2 BIDDER'S REPRESENTATIONS

3 BIDDING DOCUMENTS

4 BIDDING PROCEDURES

5 CONSIDERATION OF BIDS

6 POST-BID INFORMATION

7 PERFORMANCE BOND AND PAYMENT BOND

8 ENUMERATION OF THE PROPOSED CONTRACT DOCUMENTS

ADDITIONS AND DELETIONS:
The author of this document may have revised the text of the original AIA standard form. An *Additions and Deletions Report* that notes revisions to the standard form text is available from the author and should be reviewed. A vertical line in the left margin of this document indicates where the author has added to or deleted from the original AIA text.

This document has important legal consequences. Consultation with an attorney is encouraged with respect to its completion or modification.

FEDERAL, STATE, AND LOCAL LAWS MAY IMPOSE REQUIREMENTS ON PUBLIC PROCUREMENT CONTRACTS. CONSULT LOCAL AUTHORITIES OR AN ATTORNEY TO VERIFY REQUIREMENTS APPLICABLE TO THIS PROCUREMENT BEFORE COMPLETING THIS FORM.

It is intended that AIA Document G612™–2017, Owner's Instructions to the Architect, Parts A and B will be completed prior to using this document.

AIA Document A701 – 2018. Copyright © 1970, 1974, 1978, 1987, 1997 and 2018. All rights reserved. "The American Institute of Architects," "American Institute of Architects," "AIA," the AIA Logo, and "AIA Contract Documents" are trademarks of The American Institute of Architects. This document was produced at 15:53:02 CDT on 05/21/2026 under Subscription No.20240042832 which expires on 07/01/2026, is not for resale, is licensed for one-time use only, and may only be used in accordance with the AIA Contract Documents® Terms of Service. To report copyright violations, e-mail docinfo@aiacontracts.com.
User Notes: (6a01fabe3d7c0502ed204dc6)

ARTICLE 1 DEFINITIONS

§ 1.1 Bidding Documents include the Bidding Requirements and the Proposed Contract Documents. The Bidding Requirements consist of the advertisement or invitation to bid, Instructions to Bidders, supplementary instructions to bidders, the bid form, and any other bidding forms. The Proposed Contract Documents consist of the unexecuted form of Agreement between the Owner and Contractor and that Agreement's Exhibits, Conditions of the Contract (General, Supplementary and other Conditions), Drawings, Specifications, all Addenda, and all other documents enumerated in Article 8 of these Instructions.

§ 1.2 Definitions set forth in the General Conditions of the Contract for Construction, or in other Proposed Contract Documents apply to the Bidding Documents.

§ 1.3 Addenda are written or graphic instruments issued by the Architect, which, by additions, deletions, clarifications, or corrections, modify or interpret the Bidding Documents.

§ 1.4 A Bid is a complete and properly executed proposal to do the Work for the sums stipulated therein, submitted in accordance with the Bidding Documents.

§ 1.5 The Base Bid is the sum stated in the Bid for which the Bidder offers to perform the Work described in the Bidding Documents, to which Work may be added or deleted by sums stated in Alternate Bids.

§ 1.6 An Alternate Bid (or Alternate) is an amount stated in the Bid to be added to or deducted from, or that does not change, the Base Bid if the corresponding change in the Work, as described in the Bidding Documents, is accepted.

§ 1.7 A Unit Price is an amount stated in the Bid as a price per unit of measurement for materials, equipment, or services, or a portion of the Work, as described in the Bidding Documents.

§ 1.8 A Bidder is a person or entity who submits a Bid and who meets the requirements set forth in the Bidding Documents.

§ 1.9 A Sub-bidder is a person or entity who submits a bid to a Bidder for materials, equipment, or labor for a portion of the Work.

ARTICLE 2 BIDDER'S REPRESENTATIONS

§ 2.1 By submitting a Bid, the Bidder represents that:

- **.1** the Bidder has read and understands the Bidding Documents;
- **.2** the Bidder understands how the Bidding Documents relate to other portions of the Project, if any, being bid concurrently or presently under construction;
- **.3** the Bid complies with the Bidding Documents;
- **.4** the Bidder has visited the site, become familiar with local conditions under which the Work is to be performed, and has correlated the Bidder's observations with the requirements of the Proposed Contract Documents;
- **.5** the Bid is based upon the materials, equipment, and systems required by the Bidding Documents without exception; and
- **.6** the Bidder has read and understands the provisions for liquidated damages, if any, set forth in the form of Agreement between the Owner and Contractor.

§ 2.2 The Bidder is licensed by the State Licensing Board for General Contractors and the amount Bid does not exceed the Bid Limit stipulated in the Bidder's License and by the City of Mobile.

§ 2.3 Each and every Contractor belonging to or comprising a part of any entity that is bidding as a joint venture or association involving two or more contractors is licensed by the State Licensing Board for General Contractors and that the amount Bid does not exceed the Bid limit stipulated in at least one of their licenses.

§ 2.4 Any non-resident Bidder is authorized by the Secretary of State of Alabama and is registered with Alabama Department of Revenue to transact business in Alabama.**§ 2.5** Joint Ventures or Associations of Contractors, whether the same are Bidders or Subcontractors of Bidders, will remain in existence until all insurance and

AIA Document A701 – 2018. Copyright © 1970, 1974, 1978, 1987, 1997 and 2018. All rights reserved. "The American Institute of Architects," "American Institute of Architects," "AIA," the AIA Logo, and "AIA Contract Documents" are trademarks of The American Institute of Architects. This document was produced at 15:53:02 CDT on 05/21/2026 under Subscription No.20240042832 which expires on 07/01/2026, is not for resale, is licensed for one-time use only, and may only be used in accordance with the AIA Contract Documents® Terms of Service. To report copyright violations, e-mail docinfo@aiacontracts.com.
User Notes: (6a01fabe3d7c0502ed204dc6)

warranty requirement for the Project have been fulfilled.

ARTICLE 3 BIDDING DOCUMENTS

§ 3.1 Distribution

§ 3.1.1 Bidders shall obtain complete Bidding Documents, as indicated below, from the issuing office designated in the advertisement or invitation to bid, for the deposit sum, if any, stated therein.
Bid (Indicate how, such as by email, website, host site/platform, paper copy, or other method Bidders shall obtain Bidding Documents.)

from the City of Mobile Real Estate Asset Management Department as listed in the Invitation to Bid.

§ 3.1.2 Any required deposit shall be refunded to Bidders who submit a bona fide Bid and return the paper Bidding Documents in good condition within ten days after receipt of Bids. The cost to replace missing or damaged paper documents will be deducted from the deposit. A Bidder receiving a Contract award may retain the paper Bidding Documents, and the Bidder's deposit will be refunded.

§ 3.1.3 Bidding Documents will not be issued directly to Sub-bidders unless specifically offered in the advertisement or invitation to bid, or in supplementary instructions to bidders.

§ 3.1.4 Bidders shall use complete Bidding Documents in preparing Bids. Neither the Owner nor Architect assumes responsibility for errors or misinterpretations resulting from the use of incomplete Bidding Documents.

§ 3.1.5 The Bidding Documents will be available for the sole purpose of obtaining Bids on the Work. No license or grant of use is conferred by distribution of the Bidding Documents.

§ 3.2 Modification or Interpretation of Bidding Documents

§ 3.2.1 The Bidder shall carefully study the Bidding Documents, shall examine the site and local conditions, and shall notify the Architect of errors, inconsistencies, or ambiguities discovered and request clarification or interpretation pursuant to Section 3.2.2.

§ 3.2.2 Requests for clarification or interpretation of the Bidding Documents shall be submitted by the Bidder in writing and shall be received by the Architect at least five (5) days prior to the date for receipt of Bids.
(Indicate how, such as by email, website, host site/platform, paper copy, or other method Bidders shall submit requests for clarification and interpretation.)

Via email to Design Consultant and City of Mobile Project Manager, at chuck.babin@cityofmobile.gov

§ 3.2.3 Modifications and interpretations of the Bidding Documents shall be made by Addendum. Modifications and interpretations of the Bidding Documents made in any other manner shall not be binding, and Bidders shall not rely upon them.

§ 3.3 Substitutions

§ 3.3.1 The materials, products, and equipment described in the Bidding Documents establish a standard of required function, dimension, appearance, and quality to be met by any proposed substitution.

§ 3.3.2 Substitution Process

§ 3.3.2.1 Written requests for substitutions shall be received by the Architect at least ten days prior to the date for receipt of Bids. Requests shall be submitted in the same manner as that established for submitting clarifications and interpretations in Section 3.2.2.

§ 3.3.2.2 Bidders shall submit substitution requests on a Substitution Request Form if one is provided in the Bidding Documents.

§ 3.3.2.3 If a Substitution Request Form is not provided, requests shall include (1) the name of the material or equipment specified in the Bidding Documents; (2) the reason for the requested substitution; (3) a complete description of the proposed substitution including the name of the material or equipment proposed as the substitute, performance and test data, and relevant drawings; and (4) any other information necessary for an evaluation. The request shall include a statement setting forth changes in other materials, equipment, or other portions of the Work, including changes in the work of other contracts or the impact on any Project Certifications

AIA Document A701 – 2018. Copyright © 1970, 1974, 1978, 1987, 1997 and 2018. All rights reserved. "The American Institute of Architects," "American Institute of Architects," "AIA," the AIA Logo, and "AIA Contract Documents" are trademarks of The American Institute of Architects. This document was produced at 15:53:02 CDT on 05/21/2026 under Subscription No.20240042832 which expires on 07/01/2026, is not for resale, is licensed for one-time use only, and may only be used in accordance with the AIA Contract Documents® Terms of Service. To report copyright violations, e-mail docinfo@aiacontracts.com.
User Notes: (6a01fabe3d7c0502ed204dc6)

(such as LEED), that will result from incorporation of the proposed substitution.

§ 3.3.3 The burden of proof of the merit of the proposed substitution is upon the proposer. The Architect's decision of approval or disapproval of a proposed substitution shall be final.

§ 3.3.4 If the Architect approves a proposed substitution prior to receipt of Bids, such approval shall be set forth in an Addendum. Approvals made in any other manner shall not be binding, and Bidders shall not rely upon them.

§ 3.3.5 No substitutions will be considered after the Contract award unless specifically provided for in the Contract Documents.

§ 3.4 Addenda

§ 3.4.1 Addenda will be transmitted to Bidders known by the issuing office to have received complete Bidding Documents via email, and City of Mobile Bid Website.
(Indicate how, such as by email, website, host site/platform, paper copy, or other method Addenda will be transmitted.)

§ 3.4.2 Addenda will be available where Bidding Documents are on file.

§ 3.4.3 Addenda will be issued no later than four days prior to the date for receipt of Bids, except an Addendum withdrawing the request for Bids or one which includes postponement of the date for receipt of Bids.

§ 3.4.4 Prior to submitting a Bid, each Bidder shall ascertain that the Bidder has received all Addenda issued, and the Bidder shall acknowledge their receipt in the Bid.

ARTICLE 4 BIDDING PROCEDURES

§ 4.1 Preparation of Bids

§ 4.1.1 Bids shall be submitted on the forms included with or identified in the Bidding Documents. No bid will be considered unless made out and submitted on a copy of the Bid Form, Section 00400. Additional Bid Forms will be furnished to prospective Bidders upon request.

§ 4.1.2 All blanks on the bid form shall be legibly executed. Paper bid forms shall be executed in a non-erasable medium.

§ 4.1.3 Sums shall be expressed in both words and numbers, unless noted otherwise on the bid form. In case of discrepancy, the amount entered in words shall govern.

§ 4.1.4 Edits to entries made on paper bid forms must be initialed by the signer of the Bid.

§ 4.1.5 All requested Alternates shall be bid. If no change in the Base Bid is required, enter "No Change" or as required by the bid form.

Unit Prices: Supply requested Unit Prices where shown on the Bid Form, Such Unit Prices shall be used to adjust the Contract Amount where the quantities shown on the Drawings and/or Specifications do not reflect amounts required for completion of the work. Where Completion of the Work requires quantities in excess of those shown on the drawings and specifications, unit prices shall be used to compute an extra payment to the Contractor. Where completion of work required quantities less than those on the Drawings and/or specifications, unit prices shall be used to compute a credit to the Owner.
Contingency Allowance: As shown on the Bid Form, Contractor shall add the amount of the contingency allowance to the Base Bid to derive the Total Bid. The contingency allowance shall cover cost of material, labor, overhead, profit and other expenses for complete installation of items of additional work as required for a complete functional project. The contingency allowance shall be used to fund unforeseen conditions not covered in the construction documents and shall be subject to the provisions of change orders. Upson the completion of work any unused portion of the contingency allowance shall be credited to the Owner by change order.

§ 4.1.6 Where two or more Bids for designated portions of the Work have been requested, the Bidder may, without forfeiture of the bid security, state the Bidder's refusal to accept award of less than the combination of Bids stipulated by the Bidder. The Bidder shall neither make additional stipulations on the bid form nor qualify the Bid in any other manner.

AIA Document A701 – 2018. Copyright © 1970, 1974, 1978, 1987, 1997 and 2018. All rights reserved. "The American Institute of Architects," "American Institute of Architects," "AIA," the AIA Logo, and "AIA Contract Documents" are trademarks of The American Institute of Architects. This document was produced at 15:53:02 CDT on 05/21/2026 under Subscription No.20240042832 which expires on 07/01/2026, is not for resale, is licensed for one-time use only, and may only be used in accordance with the AIA Contract Documents® Terms of Service. To report copyright violations, e-mail docinfo@aiacontracts.com.
User Notes: (6a01fabe3d7c0502ed204dc6)

§ 4.1.7 Each copy of the Bid shall state the legal name and legal status of the Bidder. As part of the documentation submitted with the Bid, the Bidder shall provide evidence of its legal authority to perform the Work in the jurisdiction where the Project is located. Each copy of the Bid shall be signed by the person or persons legally authorized to bind the Bidder to a contract. A Bid by a corporation shall further name the state of incorporation and have the corporate seal affixed. A Bid submitted by an agent shall have a current power of attorney attached, certifying the agent's authority to bind the Bidder.

§ 4.1.8 A Bidder shall incur all costs associated with the preparation of its Bid.

§ 4.2 Bid Security

§ 4.2.1 Each Bid shall be accompanied by the following bid security:
(Insert the form and amount of bid security.)

The Bidder shall provide a Bid Security in the form of a cashier's check drawn on an Alabama bank or a Bid Bond. Bid Security is required for bids exceeding $50,000.00. Bid Security shall be in the amount of 5% of the TOTAL BID, but in no event more than $10,000.00.

§ 4.2.2 The Bidder pledges to enter into a Contract with the Owner on the terms stated in the Bid and shall, if required, furnish bonds covering the faithful performance of the Contract and payment of all obligations arising thereunder. Should the Bidder refuse to enter into such Contract or fail to furnish such bonds if required, the amount of the bid security shall be forfeited to the Owner as liquidated damages, not as a penalty.

§ 4.2.3 If a surety bond is required as bid security, it shall be written on AIA Document A310™, Bid Bond, unless otherwise provided in the Bidding Documents. The attorney-in-fact who executes the bond on behalf of the surety shall affix to the bond a certified and current copy of an acceptable power of attorney. The Bidder shall provide surety bonds from a company or companies lawfully authorized to issue surety bonds in the jurisdiction where the Project is located.

§ 4.2.4 The Owner will have the right to retain the bid security of Bidders to whom an award is being considered until (a) the Contract has been executed and bonds, if required, have been furnished; (b) the specified time has elapsed so that Bids may be withdrawn; or (c) all Bids have been rejected.

§ 4.2.5 Bonds must be issued by a Surety authorized to do business in the State of Alabama. A Performance Bond and a Labor and Material Payment Bond are required for projects exceeding $10,000.00. If the project cost is $50,000.00 or more, the Surety must have a minimum rating of A/Class VI as reported by the latest issue of Best's Key Rating Guide Property-Casualty published by Alfred M. Best Company, Inc.

§ 4.3 Submission of Bids

§ 4.3.1 A Bidder shall submit its Bid as indicated below:
(Indicate how, such as by website, host site/platform, paper copy, or other method Bidders shall submit their Bid.)

Submission of Bid shall be as stated in Section 00 11 16, Invitation to Bid, Paragraph 9, titled "Bid Submittal".

§ 4.3.2 Paper copies of the Bid, the bid security, and any other documents required to be submitted with the Bid shall be enclosed in a sealed opaque envelope. The envelope shall be addressed to the party receiving the Bids and shall be identified with the Project name, the Bidder's name and address, and, if applicable, the designated portion of the Work for which the Bid is submitted. If the Bid is sent by mail, the sealed envelope shall be enclosed in a separate mailing envelope with the notation "SEALED BID ENCLOSED" on the face thereof.

§ 4.3.3 Bids shall be submitted by the date and time and at the place indicated in the invitation to bid. Bids submitted after the date and time for receipt of Bids, or at an incorrect place, will not be accepted.

§ 4.3.4 The Bidder shall assume full responsibility for timely delivery at the location designated for receipt of Bids.

§ 4.3.5 A Bid submitted by any method other than as provided in this Section 4.3 will not be accepted.

§ 4.4 Modification or Withdrawal of Bid

AIA Document A701 – 2018. Copyright © 1970, 1974, 1978, 1987, 1997 and 2018. All rights reserved. "The American Institute of Architects," "American Institute of Architects," "AIA," the AIA Logo, and "AIA Contract Documents" are trademarks of The American Institute of Architects. This document was produced at 15:53:02 CDT on 05/21/2026 under Subscription No.20240042832 which expires on 07/01/2026, is not for resale, is licensed for one-time use only, and may only be used in accordance with the AIA Contract Documents® Terms of Service. To report copyright violations, e-mail docinfo@aiacontracts.com.
User Notes: (6a01fabe3d7c0502ed204dc6)

§ 4.4.1 Prior to the date and time designated for receipt of Bids, a Bidder may submit a new Bid to replace a Bid previously submitted, or withdraw its Bid entirely, by notice to the party designated to receive the Bids. Such notice shall be received and duly recorded by the receiving party on or before the date and time set for receipt of Bids. The receiving party shall verify that replaced or withdrawn Bids are removed from the other submitted Bids and not considered. Notice of submission of a replacement Bid or withdrawal of a Bid shall be worded so as not to reveal the amount of the original Bid.

§ 4.4.2 Withdrawn Bids may be resubmitted up to the date and time designated for the receipt of Bids in the same format as that established in Section 4.3, provided they fully conform with these Instructions to Bidders. Bid security shall be in an amount sufficient for the Bid as resubmitted.

ARTICLE 5 CONSIDERATION OF BIDS

ARTICLE 5 CONSIDERATION OF BIDS

§ 5.1 Opening of Bids

If stipulated in an advertisement or invitation to bid, or when otherwise required by law, Bids properly identified and received within the specified time limits will be publicly opened and read aloud. A summary of the Bids may be made available to Bidders.

§ 5.2 Rejection of Bids

Unless otherwise prohibited by law, the Owner shall have the right to reject any or all Bids.

§ 5.3 Acceptance of Bid (Award)

§ 5.3.1 It is the intent of the Owner to award a Contract to the lowest responsive and responsible Bidder, provided the Bid has been submitted in accordance with the requirements of the Bidding Documents. Unless otherwise prohibited by law, the Owner shall have the right to waive informalities and irregularities in a Bid received and to accept the Bid which, in the Owner's judgment, is in the Owner's best interests.

§ 5.3.2 Unless otherwise prohibited by law, the Owner shall have the right to accept Alternates in any order or combination, unless otherwise specifically provided in the Bidding Documents, and to determine the lowest responsive and responsible Bidder on the basis of the sum of the Base Bid and Alternates accepted.

ARTICLE 6 POST-BID INFORMATION

§ 6.1 Contractor's Qualification Statement

Bidders to whom award of a Contract is under consideration shall submit to the Architect, upon request and within the timeframe specified by the Architect, a properly executed AIA Document A305™, Contractor's Qualification Statement, unless such a Statement has been previously required and submitted for this Bid.

§ 6.3 Submittals

§ 6.3.1 After notification of selection for the award of the Contract, the Bidder shall, as soon as practicable or as stipulated in the Bidding Documents, submit in writing to the Owner through the Architect:

- **.1** a designation of the Work to be performed with the Bidder's own forces;
- **.2** names of the principal products and systems proposed for the Work and the manufacturers and suppliers of each; and
- **.3** names of persons or entities (including those who are to furnish materials or equipment fabricated to a special design) proposed for the principal portions of the Work.
- **.4** The name of the Project Superintendent and Project Manager together with the resume of qualifications of each;
- **.5** Nonresident Contractor shall submit a letter from an attorney as required by Subparagraph 11.1.2 below and;
- **.6** Engineering Firm or Testing Laboratory for testing as specified.

§ 6.3.2 The Bidder will be required to establish to the satisfaction of the Architect and Owner the reliability and responsibility of the persons or entities proposed to furnish and perform the Work described in the Bidding Documents.

§ 6.3.3 Prior to the execution of the Contract, the Architect will notify the Bidder if either the Owner or Architect,

AIA Document A701 – 2018. Copyright © 1970, 1974, 1978, 1987, 1997 and 2018. All rights reserved. "The American Institute of Architects," "American Institute of Architects," "AIA," the AIA Logo, and "AIA Contract Documents" are trademarks of The American Institute of Architects. This document was produced at 15:53:02 CDT on 05/21/2026 under Subscription No.20240042832 which expires on 07/01/2026, is not for resale, is licensed for one-time use only, and may only be used in accordance with the AIA Contract Documents® Terms of Service. To report copyright violations, e-mail docinfo@aiacontracts.com.
User Notes: (6a01fabe3d7c0502ed204dc6)

after due investigation, has reasonable objection to a person or entity proposed by the Bidder. If the Owner or Architect has reasonable objection to a proposed person or entity, the Bidder may, at the Bidder's option, withdraw the Bid or submit an acceptable substitute person or entity. The Bidder may also submit any required adjustment in the Base Bid or Alternate Bid to account for the difference in cost occasioned by such substitution. The Owner may accept the adjusted bid price or disqualify the Bidder. In the event of either withdrawal or disqualification, bid security will not be forfeited.

§ 6.3.4 Persons and entities proposed by the Bidder and to whom the Owner and Architect have made no reasonable objection must be used on the Work for which they were proposed and shall not be changed except with the written consent of the Owner and Architect.

§ 6.3.5 The Contractor shall, within seven (7) calendar days of receiving Contract Forms for signature, furnish to the Owner the following items, along with the signed contract, or the Bid Security will be forfeited automatically without further delay:

.1 A Signed Construction Contract;
.2 Performance Bond and Labor and Material Payment Bond (originals) on all Bids over $10,000.00;
.3 Certificate of Insurance and copy of Builder's Risk Policy (original), as identified in the specifications;
.4 Schedule of Values; and
.5 Federal Immigration Law Compliance: E-Verify enrollment documentation.

§ 6.3.6 The Bid Check or Bond of the three (3) lowest Bidders will not be returned until after the Construction Contract is executed.

ARTICLE 7 PERFORMANCE BOND AND PAYMENT BOND

§ 7.1 Bond Requirements

§ 7.1.1 If stipulated in the Bidding Documents, the Bidder shall furnish bonds covering the faithful performance of the Contract and payment of all obligations arising thereunder.

§ 7.1.2 If the furnishing of such bonds is stipulated in the Bidding Documents, the cost shall be included in the Bid. If the furnishing of such bonds is required after receipt of bids and before execution of the Contract, the cost of such bonds shall be added to the Bid in determining the Contract Sum.

§ 7.1.3 The Bidder shall provide surety bonds from a company or companies lawfully authorized to issue surety bonds in the jurisdiction where the Project is located.

§ 7.1.4 Unless otherwise indicated below, the Penal Sum of the Payment and Performance Bonds shall be the amount of the Contract Sum.
(If Payment or Performance Bonds are to be in an amount other than 100% of the Contract Sum, indicate the dollar amount or percentage of the Contract Sum.)

A Surety authorized to do business in the State of Alabama shall issue Performance Bond and Labor and Material Payment Bond, as required by the Contract Documents. If the project cost is $50,000.00 or more, the Surety must have a minimum rating of A/Class VI as reported by the latest issue of Best's Key Rating Guide Property-Casualty, published by Alfred M. Best Company, Inc.

§ 7.2 Time of Delivery and Form of Bonds

§ 7.2.1 The Bidder shall deliver the required bonds to the Owner not later than ten (10) calendar days from receiving the Construction Contract forms for signature.

§ 7.2.2 The bonds shall be written on City's Performance Bond and Labor and Material Payment Bond forms.

§ 7.2.3 The bonds shall be dated on or after the date of the Contract.

§ 7.2.4 The Bidder shall require the attorney-in-fact who executes the required bonds on behalf of the surety to affix to the bond a certified and current copy of the power of attorney.

ARTICLE 8 FORM OF AGREEMENT BETWEEN OWNER AND CONTRACTOR

§ 8.1 AIA Document A101, Standard Form of Agreement Between Owner and Contractor where the Basis of

AIA Document A701 – 2018. Copyright © 1970, 1974, 1978, 1987, 1997 and 2018. All rights reserved. "The American Institute of Architects," "American Institute of Architects," "AIA," the AIA Logo, and "AIA Contract Documents" are trademarks of The American Institute of Architects. This document was produced at 15:53:02 CDT on 05/21/2026 under Subscription No.20240042832 which expires on 07/01/2026, is not for resale, is licensed for one-time use only, and may only be used in accordance with the AIA Contract Documents® Terms of Service. To report copyright violations, e-mail docinfo@aiacontracts.com.
User Notes: (6a01fabe3d7c0502ed204dc6)

Payment is a stipulated sum will be edited electronically and include the standard signatures as required by the City of Mobile.Contract Documents as set forth in the attached sample contract.

ARTICLE 9 NONDISCRIMINATION

§9.1.1 Contractor shall comply with all Federal, State and local laws concerning nondiscrimination, including but not limited to City of Mobile Ordinance No. 14-034 which requires, *inter alia*, that all contractors performing work for the City of Mobile not discriminate on the basis of race, creed, color, national origin or disability, require that all subcontractors they engage do the same, and make every reasonable effort to assure that fifteen percent of the work performed under contract be awarded to socially and economically disadvantaged individuals and business entities.
Contractor shall provide a completed copy of the City of Mobile Subcontracting and Major Supplier Plan with the Bid Form, for bids of $250,000.00 or greater.

ARTICLE 10 USE OF DOMESTIC PRODUCTS

§ 10.1.1 Section 39-3-1 Code of Alabama provides that the Contractor agrees, in the execution of this contract, to use material supplies and products manufactured, mined, processed or otherwise produced in the United States or its territories, if available at reasonable prices, and that breach of this agreement by the Contractor shall result in the assessment of liquidated damages in an amount not less than $500 nor more than 20 percent of the gross amount of the contract price.

§ 10.1.2 Section 39-3-4, Code of Alabama provides that the Contractor for a municipal construction project, financed by the State of Alabama or any political subdivision thereof, is required to use steel produced within the United States.
If the Contractor violates the requirement to use domestic steel, this contract will automatically be revoked and the contractor shall not be entitled to any set-off or recoupment for labor or materials used up to the time of revocation.

ARTICLE 11 PREFERENCE TO RESIDENT CONTRACTORS

§ 11.1.1 Except for contracts funded in whole or in part with funds received from a federal agency, preference shall be given to Alabama resident contractors, and a nonresident bidder domiciled in a state having laws granting preference to local contactors shall be awarded the contracts only on the same basis as a the nonresident bidder's state awards contracts to Alabama contractors bidding under similar circumstances. In the letting of public contracts in which any state, county or municipal funds are utilized, resident contractors in Alabama, be they corporations, individuals or partnerships, are to be granted preference over nonresidents in awarding of contracts in the same manner and to the same extent as provided by the laws of the state of domicile of the nonresident.

§ 11.1.2 A successful nonresident bidder shall include in his post bid submittals a written opinion of an attorney at law licensed to practice law in such nonresident bidders' state of domicile, as to the preferences, if any or none, granted by the law of that state to its own business entities whose principal places of business are in that state in the letting of any or all public contracts.

ARTICLE 12 PRE-BID REQUIREMENTS

§ 12.1 STATE OF ALABAMA CONTRACTORS LICENSE

§ 12.1.1 If the Project total bid amount is $50,000 or more, a license issued by the State of Alabama Licensing Board

AIA Document A701 – 2018. Copyright © 1970, 1974, 1978, 1987, 1997 and 2018. All rights reserved. "The American Institute of Architects," "American Institute of Architects," "AIA," the AIA Logo, and "AIA Contract Documents" are trademarks of The American Institute of Architects. This document was produced at 15:53:02 CDT on 05/21/2026 under Subscription No.20240042832 which expires on 07/01/2026, is not for resale, is licensed for one-time use only, and may only be used in accordance with the AIA Contract Documents® Terms of Service. To report copyright violations, e-mail docinfo@aiacontracts.com.
User Notes: (6a01fabe3d7c0502ed204dc6)

for General Contractors is required prior to submitting a bid and the licensed classification and bid limits must cover the
type of work in this project. See Invitation to Bid, Section 6 "Bidder Qualifications".

§ 12.2 A NONRESIDENT BIDDER

§ 12.2.1 Every bidder shall be registered with the Department of Revenue prior to bidding and all bidders shall have a
certificate of authorization to do business in Alabama from the Secretary of the State of Alabama. The registration number shall be included on the bid form.

ARTICLE 13 POST-BID REQUIREMENTS

§ 13.1 CITY CONTRACTOR'S LICENSE

13.1.1 A City of Mobile Contractor's License is required and must be current at the time of bidding. Contractor must
qualify and post $10,000.00 Surety Bond with the Land Use/Code Administration Department before a Contractor's License will be issued by the Revenue Department. Information on the City Contractor's License may be obtained by
writing or calling:

BUILD Mobile
P. O. Box 1827
Mobile, Alabama 36633-1827
Phone: 251.208.7421

Revenue Department
P. O. Box 1827
Mobile, Alabama 36633-1827
251.208.7461

13.2 E-VERIFY DOCUMENTATION

§ 13.2.1 The Contractor agrees that it shall comply with all of the requirements of the State of Alabama Immigration
Law (Act. No. 2011-535 as amended by Act. No. 2012-491, Alabama Code (1975) Section 31-13-1, et. Seq., See Section 31-13-9), and the provisions of said Law, including all penalties for violation thereof, orated therein.

13.3 PUBLIC CONTRACTS WITH ENTITIES ENGAGING IN CERTAIN BOYCOTT ACTIVITIES

§ 13.3 The Contractor represents and agrees that it is not currently engaged in, nor will engage in, any boycott of a person or entity based in or doing business with a jurisdiction with which the State of Alabama can enjoy open trade.

END OF SECTION

AIA Document A701 – 2018. Copyright © 1970, 1974, 1978, 1987, 1997 and 2018. All rights reserved. "The American Institute of Architects," "American Institute of Architects," "AIA," the AIA Logo, and "AIA Contract Documents" are trademarks of The American Institute of Architects. This document was produced at 15:53:02 CDT on 05/21/2026 under Subscription No.20240042832 which expires on 07/01/2026, is not for resale, is licensed for one-time use only, and may only be used in accordance with the AIA Contract Documents® Terms of Service. To report copyright violations, e-mail docinfo@aiacontracts.com.
User Notes: (6a01fabe3d7c0502ed204dc6)

Additions and Deletions Report for
AIA® Document A701® – 2018

This Additions and Deletions Report, as defined on page 1 of the associated document, reproduces below all text the author has added to the standard form AIA document in order to complete it, as well as any text the author may have added to or deleted from the original AIA text. Added text is shown underlined. Deleted text is indicated with a horizontal line through the original AIA text.

Note: This Additions and Deletions Report is provided for information purposes only and is not incorporated into or constitute any part of the associated AIA document. This Additions and Deletions Report and its associated document were generated simultaneously by AIA software at 15:53:02 CDT on 05/21/2026.

Changes to original AIA text

PAGE 1

~~**THE ARCHITECT**~~**THEDESIGN CONSULTANT:**

PAGE 2

§ 2.2 The Bidder is licensed by the State Licensing Board for General Contractors and the amount Bid does not exceed the Bid Limit stipulated in the Bidder's License and by the City of Mobile.

§ 2.3 Each and every Contractor belonging to or comprising a part of any entity that is bidding as a joint venture or association involving two or more contractors is licensed by the State Licensing Board for General Contractors and that the amount Bid does not exceed the Bid limit stipulated in at least one of their licenses.

§ 2.4 Any non-resident Bidder is authorized by the Secretary of State of Alabama and is registered with Alabama Department of Revenue to transact business in Alabama.**§ 2.5** Joint Ventures or Associations of Contractors, whether the same are Bidders or Subcontractors of Bidders, will remain in existence until all insurance and warranty requirement for the Project have been fulfilled.

PAGE 3

Bid (Indicate how, such as by email, website, host site/platform, paper copy, or other method Bidders shall obtain Bidding Documents.)

§ 3.2.2 Requests for clarification or interpretation of the Bidding Documents shall be submitted by the Bidder in writing and shall be received by the Architect at least ~~seven~~five (5) days prior to the date for receipt of Bids.

PAGE 4

§ 3.4.1 Addenda will be transmitted to Bidders known by the issuing office to have received complete Bidding Documents via email, and City of Mobile Bid Website.

§ 4.1.1 ~~Bids~~1Bids shall be submitted on the forms included with or identified in the Bidding Documents. No bid will be considered unless made out and submitted on a copy of the Bid Form, Section 00400. Additional Bid Forms will be furnished to prospective Bidders upon request.

Additions and Deletions Report for AIA Document A701 – 2018. Copyright © 1970, 1974, 1978, 1987, 1997 and 2018. All rights reserved. "The American Institute of Architects," "American Institute of Architects," "AIA," the AIA Logo, and "AIA Contract Documents" are trademarks of The American Institute of Architects. This document was produced at 15:53:02 CDT on 05/21/2026 under Subscription No.20240042832 which expires on 07/01/2026, is not for resale, is licensed for one-time use only, and may only be used in accordance with the AIA Contract Documents® Terms of Service. To report copyright violations, e-mail docinfo@aiacontracts.com.
User Notes: (6a01fabe3d7c0502ed204dc6)

Unit Prices: Supply requested Unit Prices where shown on the Bid Form, Such Unit Prices shall be used to adjust the Contract Amount where the quantities shown on the Drawings and/or Specifications do not reflect amounts required for completion of the work. Where Completion of the Work requires quantities in excess of those shown on the drawings and specifications, unit prices shall be used to compute an extra payment to the Contractor. Where completion of work required quantities less than those on the Drawings and/or specifications, unit prices shall be used to compute a credit to the Owner.

Contingency Allowance: As shown on the Bid Form, Contractor shall add the amount of the contingency allowance to the Base Bid to derive the Total Bid. The contingency allowance shall cover cost of material, labor, overhead, profit and other expenses for complete installation of items of additional work as required for a complete functional project. The contingency allowance shall be used to fund unforeseen conditions not covered in the construction documents and shall be subject to the provisions of change orders. Upson the completion of work any unused portion of the contingency allowance shall be credited to the Owner by change order.

PAGE 5

§ 4.2.2 The Bidder pledges to enter into a Contract with the Owner on the terms stated in the Bid and shall, if required, furnish bonds covering the faithful performance of the Contract and payment of all obligations arising thereunder. Should the Bidder refuse to enter into such Contract or fail to furnish such bonds if required, the amount of the bid security shall be forfeited to the Owner as liquidated damages, not as a penalty. ~~In the event the Owner fails to comply with Section 6.2, the amount of the bid security shall not be forfeited to the Owner.~~

§ 4.2.4 The Owner will have the right to retain the bid security of Bidders to whom an award is being considered until (a) the Contract has been executed and bonds, if required, have been furnished; (b) the specified time has elapsed so that Bids may be withdrawn; or (c) all Bids have been rejected. ~~However, if no Contract has been awarded or a Bidder has not been notified of the acceptance of its Bid, a Bidder may, beginningdays after the opening of Bids, withdraw its Bid and request the return of its bid security~~

§ 4.2.5 Bonds must be issued by a Surety authorized to do business in the State of Alabama. A Performance Bond and a Labor and Material Payment Bond are required for projects exceeding $10,000.00. If the project cost is $50,000.00 or more, the Surety must have a minimum rating of A/Class VI as reported by the latest issue of Best's Key Rating Guide Property-Casualty published by Alfred M. Best Company, Inc.

PAGE 6

~~**§ 4.4.3** After the date and time designated for receipt of Bids, a Bidder who discovers that it made a clerical error in its Bid shall notify the Architect of such error within two days, or pursuant to a timeframe specified by the law of the jurisdiction where the Project is located, requesting withdrawal of its Bid. Upon providing evidence of such error to the reasonable satisfaction of the Architect, the Bid shall be withdrawn and not resubmitted. If a Bid is withdrawn pursuant to this Section 4.4.3, the bid security will be attended to as follows:~~
~~*(State the terms and conditions, such as Bid rank, for returning or retaining the bid security.)*~~
~~**ARTICLE 5 CONSIDERATION OF BIDS**~~

ARTICLE 5 CONSIDERATION OF BIDS

ARTICLE 5 CONSIDERATION OF BIDS

Additions and Deletions Report for AIA Document A701 – 2018. Copyright © 1970, 1974, 1978, 1987, 1997 and 2018. All rights reserved. "The American Institute of Architects," "American Institute of Architects," "AIA," the AIA Logo, and "AIA Contract Documents" are trademarks of The American Institute of Architects. This document was produced at 15:53:02 CDT on 05/21/2026 under Subscription No.20240042832 which expires on 07/01/2026, is not for resale, is licensed for one-time use only, and may only be used in accordance with the AIA Contract Documents® Terms of Service. To report copyright violations, e-mail docinfo@aiacontracts.com.
User Notes: (6a01fabe3d7c0502ed204dc6)

~~**§ 6.2 Owner's Financial Capability**~~

~~A Bidder to whom award of a Contract is under consideration may request in writing, fourteen days prior to the expiration of the time for withdrawal of Bids, that the Owner furnish to the Bidder reasonable evidence that financial arrangements have been made to fulfill the Owner's obligations under the Contract. The Owner shall then furnish such reasonable evidence to the Bidder no later than seven days prior to the expiration of the time for withdrawal of Bids. Unless such reasonable evidence is furnished within the allotted time, the Bidder will not be required to execute the Agreement between the Owner and Contractor.~~

.4 The name of the Project Superintendent and Project Manager together with the resume of qualifications of each;

.5 Nonresident Contractor shall submit a letter from an attorney as required by Subparagraph 11.1.2 below and;

.6 Engineering Firm or Testing Laboratory for testing as specified.

PAGE 7

§ 6.3.5 The Contractor shall, within seven (7) calendar days of receiving Contract Forms for signature, furnish to the Owner the following items, along with the signed contract, or the Bid Security will be forfeited automatically without further delay:

.1 A Signed Construction Contract;

.2 Performance Bond and Labor and Material Payment Bond (originals) on all Bids over $10,000.00;

.3 Certificate of Insurance and copy of Builder's Risk Policy (original), as identified in the specifications;

.4 Schedule of Values; and

.5 Federal Immigration Law Compliance: E-Verify enrollment documentation.

§ 6.3.6 The Bid Check or Bond of the three (3) lowest Bidders will not be returned until after the Construction Contract is executed.

§ 7.2.1 ~~The~~The Bidder shall deliver the required bonds to the Owner not later than ~~three days following the date of execution of the Contract. If the Work is to commence sooner in response to a letter of intent, the Bidder shall, prior to commencement of the Work, submit evidence satisfactory to the Owner that such bonds will be furnished and delivered in accordance with this Section 7.2.1~~ten (10) calendar days from receiving the Construction Contract forms for signature.

§ 7.2.2 ~~Unless otherwise provided, the~~The bonds shall be written on ~~AIA Document A312,~~City's Performance Bond and Labor and Material Payment Bond forms.

PAGE 8

ARTICLE 8 ~~ENUMERATION OF THE PROPOSED CONTRACT DOCUMENTS~~FORM OF AGREEMENT BETWEEN OWNER AND CONTRACTOR

§ 8.1 ~~Copies of the proposed Contract Documents have been made available to the Bidder and consist of the~~

Additions and Deletions Report for AIA Document A701 – 2018. Copyright © 1970, 1974, 1978, 1987, 1997 and 2018. All rights reserved. "The American Institute of Architects," "American Institute of Architects," "AIA," the AIA Logo, and "AIA Contract Documents" are trademarks of The American Institute of Architects. This document was produced at 15:53:02 CDT on 05/21/2026 under Subscription No.20240042832 which expires on 07/01/2026, is not for resale, is licensed for one-time use only, and may only be used in accordance with the AIA Contract Documents® Terms of Service. To report copyright violations, e-mail docinfo@aiacontracts.com.
User Notes: (6a01fabe3d7c0502ed204dc6)

~~following documents:~~AIA Document A101, Standard Form of Agreement Between Owner and Contractor where the Basis of Payment is a stipulated sum will be edited electronically and include the standard signatures as required by the City of Mobile.Contract Documents as set forth in the attached sample contract.

~~.1 AIA Document A101™–2017, Standard Form of Agreement Between Owner and Contractor, unless otherwise stated below.~~
~~*(Insert the complete AIA Document number, including year, and Document title.)*~~
~~.2 AIA Document A101™–2017, Exhibit A, Insurance and Bonds, unless otherwise stated below.~~
~~*(Insert the complete AIA Document number, including year, and Document title.)*~~
~~.3 AIA Document A201™–2017, General Conditions of the Contract for Construction, unless otherwise stated below.~~
~~*(Insert the complete AIA Document number, including year, and Document title.)*~~
~~.4 Building Information Modeling Exhibit, if completed:~~
~~.5 Drawings~~
~~.6 Specifications~~
~~.7 Addenda:~~
~~.8 Other Exhibits:~~
~~*(Check all boxes that apply and include appropriate information identifying the exhibit where required.)*~~
~~[ ] AIA Document E204™–2017, Sustainable Projects Exhibit, dated as indicated below:~~
~~*(Insert the date of the E204-2017.)*~~
~~[ ] The Sustainability Plan:~~
~~[ ] Supplementary and other Conditions of the Contract:~~
~~.9 Other documents listed below:~~
~~*(List here any additional documents that are intended to form part of the Proposed Contract Documents.)*~~

ARTICLE 9 NONDISCRIMINATION

§9.1.1 Contractor shall comply with all Federal, State and local laws concerning nondiscrimination, including but not

limited to City of Mobile Ordinance No. 14-034 which requires, *inter alia*, that all contractors performing work for the

City of Mobile not discriminate on the basis of race, creed, color, national origin or disability, require that all

subcontractors they engage do the same, and make every reasonable effort to assure that fifteen percent of the work

performed under contract be awarded to socially and economically disadvantaged individuals and business entities.

Contractor shall provide a completed copy of the City of Mobile Subcontracting and Major Supplier Plan with the Bid

Form, for bids of $250,000.00 or greater.

ARTICLE 10 USE OF DOMESTIC PRODUCTS

§ 10.1.1 Section 39-3-1 Code of Alabama provides that the Contractor agrees, in the execution of this contract, to use

material supplies and products manufactured, mined, processed or otherwise produced in the United States or its

Additions and Deletions Report for AIA Document A701 – 2018. Copyright © 1970, 1974, 1978, 1987, 1997 and 2018. All rights reserved. "The American Institute of Architects," "American Institute of Architects," "AIA," the AIA Logo, and "AIA Contract Documents" are trademarks of The American Institute of Architects. This document was produced at 15:53:02 CDT on 05/21/2026 under Subscription No.20240042832 which expires on 07/01/2026, is not for resale, is licensed for one-time use only, and may only be used in accordance with the AIA Contract Documents® Terms of Service. To report copyright violations, e-mail docinfo@aiacontracts.com.
User Notes: (6a01fabe3d7c0502ed204dc6)

territories, if available at reasonable prices, and that breach of this agreement by the Contractor shall result in the assessment of liquidated damages in an amount not less than $500 nor more than 20 percent of the gross amount of the contract price.

§ 10.1.2 Section 39-3-4, Code of Alabama provides that the Contractor for a municipal construction project, financed by the State of Alabama or any political subdivision thereof, is required to use steel produced within the United States.

If the Contractor violates the requirement to use domestic steel, this contract will automatically be revoked and the contractor shall not be entitled to any set-off or recoupment for labor or materials used up to the time of revocation.

ARTICLE 11 PREFERENCE TO RESIDENT CONTRACTORS

§ 11.1.1 Except for contracts funded in whole or in part with funds received from a federal agency, preference shall be given to Alabama resident contractors, and a nonresident bidder domiciled in a state having laws granting preference to local contactors shall be awarded the contracts only on the same basis as a the nonresident bidder's state awards contracts to Alabama contractors bidding under similar circumstances. In the letting of public contracts in which any state, county or municipal funds are utilized, resident contractors in Alabama, be they corporations, individuals or partnerships, are to be granted preference over nonresidents in awarding of contracts in the same manner and to the same extent as provided by the laws of the state of domicile of the nonresident.

§ 11.1.2 A successful nonresident bidder shall include in his post bid submittals a written opinion of an attorney at law licensed to practice law in such nonresident bidders' state of domicile, as to the preferences, if any or none, granted by

the law of that state to its own business entities whose principal places of business are in that state in the letting of any or all public contracts.

ARTICLE 12 PRE-BID REQUIREMENTS

§ 12.1 STATE OF ALABAMA CONTRACTORS LICENSE

§ 12.1.1 If the Project total bid amount is $50,000 or more, a license issued by the State of Alabama Licensing Board

Additions and Deletions Report for AIA Document A701 – 2018. Copyright © 1970, 1974, 1978, 1987, 1997 and 2018. All rights reserved. "The American Institute of Architects," "American Institute of Architects," "AIA," the AIA Logo, and "AIA Contract Documents" are trademarks of The American Institute of Architects. This document was produced at 15:53:02 CDT on 05/21/2026 under Subscription No.20240042832 which expires on 07/01/2026, is not for resale, is licensed for one-time use only, and may only be used in accordance with the AIA Contract Documents® Terms of Service. To report copyright violations, e-mail docinfo@aiacontracts.com.
User Notes: (6a01fabe3d7c0502ed204dc6)

for General Contractors is required prior to submitting a bid and the licensed classification and bid limits must cover the

type of work in this project. See Invitation to Bid, Section 6 "Bidder Qualifications".

§ 12.2 A NONRESIDENT BIDDER

§ 12.2.1 Every bidder shall be registered with the Department of Revenue prior to bidding and all bidders shall have a

certificate of authorization to do business in Alabama from the Secretary of the State of Alabama. The registration

number shall be included on the bid form.

ARTICLE 13 POST-BID REQUIREMENTS

§ 13.1 CITY CONTRACTOR'S LICENSE

13.1.1 A City of Mobile Contractor's License is required and must be current at the time of bidding. Contractor must

qualify and post $10,000.00 Surety Bond with the Land Use/Code Administration Department before a Contractor's License will be issued by the Revenue Department. Information on the City Contractor's License may be obtained by

writing or calling:

BUILD Mobile	Revenue Department
P. O. Box 1827	P. O. Box 1827
Mobile, Alabama 36633-1827	Mobile, Alabama 36633-1827
Phone: 251.208.7421	251.208.7461

13.2 E-VERIFY DOCUMENTATION

§ 13.2.1 The Contractor agrees that it shall comply with all of the requirements of the State of Alabama Immigration

Law (Act. No. 2011-535 as amended by Act. No. 2012-491, Alabama Code (1975) Section 31-13-1, et. Seq., See

Section 31-13-9), and the provisions of said Law, including all penalties for violation thereof, orated therein.

13.3 PUBLIC CONTRACTS WITH ENTITIES ENGAGING IN CERTAIN BOYCOTT ACTIVITIES

§ 13.3 The Contractor represents and agrees that it is not currently engaged in, nor will engage in, any boycott of a

person or entity based in or doing business with a jurisdiction with which the State of Alabama can enjoy open trade.

END OF SECTION

Variable Information

PAGE 1

Additions and Deletions Report for AIA Document A701 – 2018. Copyright © 1970, 1974, 1978, 1987, 1997 and 2018. All rights reserved. "The American Institute of Architects," "American Institute of Architects," "AIA," the AIA Logo, and "AIA Contract Documents" are trademarks of The American Institute of Architects. This document was produced at 15:53:02 CDT on 05/21/2026 under Subscription No.20240042832 which expires on 07/01/2026, is not for resale, is licensed for one-time use only, and may only be used in accordance with the AIA Contract Documents® Terms of Service. To report copyright violations, e-mail docinfo@aiacontracts.com.
User Notes: (6a01fabe3d7c0502ed204dc6)

CIP Trimmier Park Lights Upgrade

3600 Alba Club Road
Mobile, AL 36605

F584-001 UPGRADING THE LIGHTING SYSTEM FOR SAFETY IN THE FOOTBALL FIELD AREA

City of Mobile

Real Estate Asset Management Department
P. O. Box 1827
Mobile, AL 36633-1827

Jaguar Consulting, LLC

8658 Capital Drive North
Mobile, AL 36695

251-307-1037

PAGE 3

from the City of Mobile Real Estate Asset Management Department as listed in the Invitation to Bid.

Via email to Design Consultant and City of Mobile Project Manager, at chuck.babin@cityofmobile.gov

PAGE 5

The Bidder shall provide a Bid Security in the form of a cashier's check drawn on an Alabama bank or a Bid Bond. Bid Security is required for bids exceeding $50,000.00. Bid Security shall be in the amount of 5% of the TOTAL BID, but in no event more than $10,000.00.

Submission of Bid shall be as stated in Section 00 11 16, Invitation to Bid, Paragraph 9, titled "Bid Submittal".

PAGE 7

A Surety authorized to do business in the State of Alabama shall issue Performance Bond and Labor and Material Payment Bond, as required by the Contract Documents. If the project cost is $50,000.00 or more, the Surety must have a minimum rating of A/Class VI as reported by the latest issue of Best's Key Rating Guide Property-Casualty, published by Alfred M. Best Company, Inc.

Additions and Deletions Report for AIA Document A701 – 2018. Copyright © 1970, 1974, 1978, 1987, 1997 and 2018. All rights reserved. "The American Institute of Architects," "American Institute of Architects," "AIA," the AIA Logo, and "AIA Contract Documents" are trademarks of The American Institute of Architects. This document was produced at 15:53:02 CDT on 05/21/2026 under Subscription No.20240042832 which expires on 07/01/2026, is not for resale, is licensed for one-time use only, and may only be used in accordance with the AIA Contract Documents® Terms of Service. To report copyright violations, e-mail docinfo@aiacontracts.com.
User Notes: (6a01fabe3d7c0502ed204dc6)

Certification of Document's Authenticity

AIA® Document D401™ – 2003

I, , hereby certify, to the best of my knowledge, information and belief, that I created the attached final document simultaneously with its associated Additions and Deletions Report and this certification at 15:53:02 CDT on 05/21/2026 under Order No. 20240042832 from AIA Contract Documents software and that in preparing the attached final document I made no changes to the original text of AIA® Document A701™ - 2018, Instructions to Bidders, other than those additions and deletions shown in the associated Additions and Deletions Report.

_____

(Signed)

_____

(Title)

_____

(Dated)

AIA Document D401 – 2003. Copyright © 1992 and 2003. All rights reserved. "The American Institute of Architects," "American Institute of Architects," "AIA," the AIA Logo, and "AIA Contract Documents" are trademarks of The American Institute of Architects. This document was produced at 15:53:02 CDT on 05/21/2026 under Order No.20240042832 which expires on 07/01/2026, is not for resale, is licensed for one-time use only, and may only be used in accordance with the AIA Contract Documents® Terms of Service. To report copyright violations, e-mail docinfo@aiacontracts.com.
User Notes: (6a01fabe3d7c0502ed204dc6)

AIA® Document A101® – 2017

Standard Form of Agreement Between Owner and Contractor where the basis of payment is a Stipulated Sum

AGREEMENT made as of the date last signed.
(In words, indicate day, month and year.)

BETWEEN the Owner:
(Name, legal status, address and other information)

City of Mobile
Real Estate Asset Management Department
P. O. Box 1827
Mobile, AL 36633-1827

and the Contractor:
(Name, legal status, address and other information)

_____
_____
_____

for the following Project:
(Name, location and detailed description)

CIP Trimmier Park Lights Upgrade
PR-068-24
3600 Alba Club Road
Mobile, AL 36605
F584-001 UPGRADING THE LIGHTING SYSTEM FOR SAFETY IN THE FOOTBALL FIELD AREA

The Design Consultant:
(Name, legal status, address and other information)

Jaguar Consulting, LLC
8658 Capital Drive North
Mobile, AL 36695
(251)307-1037

The Owner and Contractor agree as follows.

ADDITIONS AND DELETIONS:
The author of this document may have revised the text of the original AIA standard form. An *Additions and Deletions Report* that notes revisions to the standard form text is available from the author and should be reviewed. A vertical line in the left margin of this document indicates where the author has added to or deleted from the original AIA text.

This document has important legal consequences. Consultation with an attorney is encouraged with respect to its completion or modification.

The parties should complete A101®–2017, Exhibit A, Insurance and Bonds, contemporaneously with this Agreement. AIA Document A201®–2017, General Conditions of the Contract for Construction, is adopted in this document by reference. Do not use with other general conditions unless this document is modified.

DRAFT

ELECTRONIC COPYING of any portion of this AIA® Document to another electronic file is prohibited and constitutes a violation of copyright laws as set forth in the footer of this document.

AIA Document A101 – 2017. Copyright © 1915, 1918, 1925, 1937, 1951, 1958, 1961, 1963, 1967, 1974, 1977, 1987, 1991, 1997, 2007 and 2017. All rights reserved. "The American Institute of Architects," "American Institute of Architects," "AIA," the AIA Logo, and "AIA Contract Documents" are trademarks of The American Institute of Architects. This draft was produced at 15:55:44 CDT on 05/21/2026 under Subscription No.20240042832 which expires on 07/01/2026, is not for resale, is licensed for one-time use only, and may only be used in accordance with the AIA Contract Documents® Terms of Service. To report copyright violations, e-mail docinfo@aiacontracts.com.
User Notes: (69fcdcac800d4588359ef159)

TABLE OF ARTICLES

1 THE CONTRACT DOCUMENTS

2 THE WORK OF THIS CONTRACT

3 DATE OF COMMENCEMENT AND SUBSTANTIAL COMPLETION

4 CONTRACT SUM

5 PAYMENTS

6 DISPUTE RESOLUTION

7 TERMINATION OR SUSPENSION

8 MISCELLANEOUS PROVISIONS

9 ENUMERATION OF CONTRACT DOCUMENTS

ARTICLE 1 THE CONTRACT DOCUMENTS

The Contract Documents consist of this Agreement, Conditions of the Contract (General, Supplementary, and other Conditions), Drawings, Specifications, Addenda issued prior to execution of this Agreement, other documents listed in this Agreement, and Modifications issued after execution of this Agreement, all of which form the Contract, and are as fully a part of the Contract as if attached to this Agreement or repeated herein. In the event of conflict in the documents the following order of precedence shall control: this executed A101 Agreement and any amendments, change orders, supplementary conditions, general conditions, specifications, drawings, manufacturer reference documents. Technical reference materials do not supersede contract requirements. Modifications made by the Owner control over standard AIA language. The Contract represents the entire and integrated agreement between the parties hereto and supersedes prior negotiations, representations, or agreements, either written or oral. An enumeration of the Contract Documents, other than a Modification, appears in Article 9.

ARTICLE 2 THE WORK OF THIS CONTRACT

The Contractor shall fully execute the Work described in the Contract Documents, except as specifically indicated in the Contract Documents to be the responsibility of others.

ARTICLE 3 DATE OF COMMENCEMENT AND SUBSTANTIAL COMPLETION

§ 3.1 The date of commencement of the Work shall be:
(Check one of the following boxes.)

[ ] The date of this Agreement.

[X] A date set forth in a notice to proceed issued by the Owner.

[ ] Established as follows:
(Insert a date or a means to determine the date of commencement of the Work.)

§ 3.1.1 Notwithstanding the preceding, Contractor shall perform no work under this Contract until receipt of a notice to proceed. Contractor acknowledges and agrees that no minimum amount of work is guaranteed under this Contract and City may elect to issue no notice to proceed. If a notice is issued, the City reserves the right to amend, reduce or cancel the notice in its sole discretion.

§ 3.2 The Contract Time shall be measured from the date of commencement of the Work.

§ 3.3 Substantial Completion

§ 3.3.1 Subject to adjustments of the Contract Time as provided in the Contract Documents, the Contractor shall achieve Substantial Completion of the entire Work:

AIA Document A101 – 2017. Copyright © 1915, 1918, 1925, 1937, 1951, 1958, 1961, 1963, 1967, 1974, 1977, 1987, 1991, 1997, 2007 and 2017. All rights reserved. "The American Institute of Architects," "American Institute of Architects," "AIA," the AIA Logo, and "AIA Contract Documents" are trademarks of The American Institute of Architects. This draft was produced at 15:55:44 CDT on 05/21/2026 under Subscription No.20240042832 which expires on 07/01/2026, is not for resale, is licensed for one-time use only, and may only be used in accordance with the AIA Contract Documents® Terms of Service. To report copyright violations, e-mail docinfo@aiacontracts.com.
User Notes: (69fcdcac800d4588359ef159)

(Check one of the following boxes and complete the necessary information.)

[ ] Not later than ( ) calendar days from the date of commencement of the Work.

[X] By the following date: August 31, 2026

§ 3.3.3 If the Contractor fails to achieve Substantial Completion as provided in this Section 3.3, liquidated damages, if any, shall be assessed as set forth in Section 4.5.

ARTICLE 4 CONTRACT SUM

§ 4.1 The Owner shall pay the Contractor the Contract Sum in current funds for the Contractor's performance of the Contract. The Contract Sum shall be ($), subject to additions and deductions as provided in the Contract Documents.

Base Bid: $0.00

Envelope Adjustment: $ 0.00

Contingency Allowances: $20,000.00

Alternates 1,2,3, and 5: $0.00

Total Contract Sum: $0.00

§ 4.2 Alternates

§4.2.1 Alternates, if any, included in the Contract Sum:

Item	Price

§ 4.3 Allowances, if any, included in the Contract Sum:

Item	Price

§ 4.3 Contingency Allowance

§4.3.1 Contingency Allowance shall cover cost of material, labor, overhead, profit and other expenses for complete installation of items of additional work as required for a complete, functional project.

§4.3.2 Contingency Allowance shall be used for unforeseen conditions not covered in the construction documents.

§4.3.3 All extra work under this section must be authorized by the Owner, in writing, prior to procurement of materials or undertaking work

§4.3.4 Upon completion of the Work, the unused portion of the Allowance shall be credited back to the Owner in the form of a Change Order.

§4.3.5 Allowances are subject to the same provision of AIA 201 §7.3.7.

§ 4.4 Unit prices, if any:

(Identify the item and state the unit price and quantity limitations, if any, to which the unit price will be applicable.)

Item	Units and Limitations	Price per Unit (Price per Unit ($0.00).00)

AIA Document A101 – 2017. Copyright © 1915, 1918, 1925, 1937, 1951, 1958, 1961, 1963, 1967, 1974, 1977, 1987, 1991, 1997, 2007 and 2017. All rights reserved. "The American Institute of Architects," "American Institute of Architects," "AIA," the AIA Logo, and "AIA Contract Documents" are trademarks of The American Institute of Architects. This draft was produced at 15:55:44 CDT on 05/21/2026 under Subscription No.20240042832 which expires on 07/01/2026, is not for resale, is licensed for one-time use only, and may only be used in accordance with the AIA Contract Documents® Terms of Service. To report copyright violations, e-mail docinfo@aiacontracts.com.
User Notes: (69fcdcac800d4588359ef159)

§ 4.5 Liquidated damages

Any delay in the completion of the Work as provided for in the Contract Documents will cause inconvenience to the public and loss and damage to the Owner in interest, and in additional administrative, architectural, inspection, and supervision charges. Therefore, a time charge equal to ($250.00) per calendar day will be made against the Contractor for the entire period that any part of the Work that remains uncompleted or any required closeout documents that are not acceptably submitted for more than thirty (30) days after the time specified for the Substantial Completion of the Work, the amount of which shall be deducted by the Owner, and shall be retained by the Owner out of monies otherwise due the Contractor in the final payment, not as a penalty, but as liquidated damages sustained.

ARTICLE 5 PAYMENTS

§ 5.1 Progress Payments

§ 5.1.1 Based upon Applications for Payment submitted to the Design Consultant by the Contractor and Certificates for Payment issued by the Design Consultant, the Owner shall make progress payments on account of the Contract Sum to the Contractor as provided below and elsewhere in the Contract Documents.

§ 5.1.2 The period covered by each Application for Payment shall be one calendar month ending on the 25th of the month.

§ 5.1.3 Provided that an Application for Payment is received by the Design Consultant not later than the First day of a month, the Owner shall make payment of the amount certified to the Contractor not later than the Tenth day of the following month. If an Application for Payment is received by the Design Consultant after the application date fixed above, payment of the amount certified shall be made by the Owner not later than Thirty (30) days after the Design Consultant receives the Application for Payment.

§ 5.1.4 Each Application for Payment shall be based on the most recent schedule of values submitted by the Contractor in accordance with the Contract Documents. The schedule of values shall allocate the entire Contract Sum among the various portions of the Work. The schedule of values shall be prepared in such form, and supported by such data to substantiate its accuracy, as the Design Consultant may require. This schedule of values shall be used as a basis for reviewing the Contractor's Applications for Payment.

§ 5.1.5 Applications for Payment shall show the percentage of completion of each portion of the Work as of the end of the period covered by the Application for Payment.

§ 5.1.6 In accordance with AIA Document A201™–2017, General Conditions of the Contract for Construction, and subject to other provisions of the Contract Documents, the amount of each progress payment shall be computed as follows:

§ 5.1.6.1 The amount of each progress payment shall first include:

- **.1** That portion of the Contract Sum properly allocable to completed Work;
- **.2** That portion of the Contract Sum properly allocable to materials and equipment delivered and suitably stored at the site for subsequent incorporation in the completed construction, or, if approved in advance by the Owner, suitably stored off the site at a location agreed upon in writing; and
- **.3** That portion of Construction Change Directives that the Design Consultant determines, in the Design Consultant 's professional judgment, to be reasonably justified.

§ 5.1.6.2 The amount of each progress payment shall then be reduced by:

- **.1** The aggregate of any amounts previously paid by the Owner;
- **.2** The amount, if any, for Work that remains uncorrected and for which the Design Consultant has previously withheld a Certificate for Payment as provided in Article 9 of AIA Document A201–2017;
- **.3** Any amount for which the Contractor does not intend to pay a Subcontractor or material supplier, unless the Work has been performed by others the Contractor intends to pay;
- **.4** For Work performed or defects discovered since the last payment application, any amount for which the Design Consultant may withhold payment, or nullify a Certificate of Payment in whole or in part, as provided in Article 9 of AIA Document A201–2017; and
- **.5** Retainage withheld pursuant to Section 5.1.7.

AIA Document A101 – 2017. Copyright © 1915, 1918, 1925, 1937, 1951, 1958, 1961, 1963, 1967, 1974, 1977, 1987, 1991, 1997, 2007 and 2017. All rights reserved. "The American Institute of Architects," "American Institute of Architects," "AIA," the AIA Logo, and "AIA Contract Documents" are trademarks of The American Institute of Architects. This draft was produced at 15:55:44 CDT on 05/21/2026 under Subscription No.20240042832 which expires on 07/01/2026, is not for resale, is licensed for one-time use only, and may only be used in accordance with the AIA Contract Documents® Terms of Service. To report copyright violations, e-mail docinfo@aiacontracts.com.
User Notes: (69fcdcac800d4588359ef159)

§ 5.1.6.3 Any Progress Payment shall include partial release of liens for material and labor for previous application for payment amount approved and paid. The DBE Utilization Report shall be included with the pay application.

§ 5.1.7 Retainage

§ 5.1.7.1 For each progress payment made prior to Substantial Completion of the Work, the Owner may withhold the following amount, as retainage, from the payment otherwise due:

Five percent (5%) of the first fifty percent (50%) of the completed work and after fifty percent (50%) completion has been accomplished, no further retainage shall be held from the original Contract Sum. Increases in the contract sum by Change Order shall also be subject to retainage.

§ 5.1.7.1.1 The following items are not subject to retainage: N/A

§ 5.1.7.2 Reduction or limitation of retainage, if any, shall be as follows:

The net amount of the Retainage shall be equal to two and one half percent (2.5%) of total Contract Sum, as increased or decreased by Change Order

§ 5.1.7.3 If final completion of the work is materially delayed through no fault of the Contractor, the Owner may, at the Owner's sole discretion, without terminating the Contract, release the withheld retention, or any portion thereof, prior to final completion of the work provided the Contractor has complied with § 5.2.2 for the portion of the work for which retainage is being released.

§ 5.1.8 Except with the Owner's prior approval, the Contractor shall not make advance payments to suppliers for materials or equipment which have not been delivered and stored at the site.

§ 5.2 Final Payment

§ 5.2.1 Final monthly progress payment, constituting the entire unpaid balance of the Contract Sum, less retainage, shall be made by the Owner to the Contractor when the Contractor has fully performed the Contract except for the Contractor's responsibility to correct Work as provided in Article 12 of AIA Document A201 (including Owner's then-current modifications which may be obtained from the Owner or, alternatively, a copy of which is incorporated in the Project Manual and incorporated by reference herein as a part thereof), and to satisfy other requirements, if any, which extend beyond final payment; and a Certificate of Substantial Completion has been issued by the Design Consultant /Owner and the project accepted.

§ 5.2.2 The final two- and one-half percent (2.5%) of the total Contract Sum retained by the Owner for final payment to the Contractor of retainage will not be paid until proof of publication is submitted and all written claims paid in full. Contractor to submit the following to show that these requirements have been met:

.1 Contractor's Affidavit of Payment of Debts and Claims (AIA form G706, included in contract documents)
- **.1.1** Contractor's Release or Waiver of Liens
- **.1.2** Releases or Waivers of Liens from Subcontractors and Material and Equipment Suppliers;

.2 Contractor's Affidavit of Release of Liens (AIA form G706A, included in contract documents);
.3 Consent of Surety, if any, to final payment (AIA form G707, included in contract documents);
.4 Any additional close out requirements per the contract documents; and
.5 Notarized Affidavit of Notice of Completion advertisement from publisher.

§ 5.3 Publication of Completion

§ 5.3.1 Contractor shall provide proof of publication of Notice of Completion in a local newspaper once per week for a minimum of three (3) consecutive weeks, as required in the Ala. Code 1975 § 39-1-1 (f).

.1 The Notice of Completion shall read as follows:

STATE OF ALABAMA
COUNTY OF MOBILE
NOTICE OF COMPLETION

In accordance with Chapter I, Title 39, Code of Alabama, 1975, NOTICE IS HEREBY given that _____ [contractor name] has completed the contract for CIP Trimmier Park Lights Upgrade, located at 3600 Alba Club Road Mobile, AL 36605. All persons having any claims for labor, material or otherwise in connection with this project should immediately notify the Real Estate Asset Managment Department, City of Mobile, P. O. Box 1827, Mobile, Alabama 36633-1827.

AIA Document A101 – 2017. Copyright © 1915, 1918, 1925, 1937, 1951, 1958, 1961, 1963, 1967, 1974, 1977, 1987, 1991, 1997, 2007 and 2017. All rights reserved. "The American Institute of Architects," "American Institute of Architects," "AIA," the AIA Logo, and "AIA Contract Documents" are trademarks of The American Institute of Architects. This draft was produced at 15:55:44 CDT on 05/21/2026 under Subscription No.20240042832 which expires on 07/01/2026, is not for resale, is licensed for one-time use only, and may only be used in accordance with the AIA Contract Documents® Terms of Service. To report copyright violations, e-mail docinfo@aiacontracts.com.
User Notes: (69fcdcac800d4588359ef159)

§ 5.3.2 Publication of the Notice of Completion shall not begin until the Project has been accepted as Substantially Complete by the City of Mobile.

§ 5.3.2 Final settlement shall not be paid until 30 days after the completion of the notice of publication Ala. Code 1975 § 39-1-1 (f) (3).

ARTICLE 6 DISPUTE RESOLUTION

§ 6.1 Initial Decision Maker The Design Consultant will serve as the Initial Decision Maker pursuant to Article 15 of AIA Document A201-2017, unless the parties appoint below another individual, not a party to this Agreement, to serve as the Initial Decision Maker.

§ 6.2 Binding Dispute Resolution

For any Claim, the method of binding dispute resolution shall be litigation in a court of competent jurisdiction.

§ 6.3 Governing Law and Venue

This Agreement shall be governed by the laws of the State of Alabama, and the appropriate venue of any actions arising out of this Agreement shall be a court of proper jurisdiction in Mobile, Alabama.

ARTICLE 7 TERMINATION OR SUSPENSION

§ 7.1 The Contract may be terminated by the Owner or the Contractor as provided in Article 14 of AIA Document A201, General Conditions of the Contract for Construction, including Owner's then-current modifications, a copy of which is incorporated in the contract documents and incorporated by reference herein as a part thereof.

§ 7.2 The Work may be suspended by the Owner as provided in Article 14 of AIA Document A201, General Conditions of the Contract for Construction, including Owner's then-current modifications, a copy of which is incorporated in the contract documents and incorporated by reference herein as a part thereof.

ARTICLE 8 MISCELLANEIOUS PROVISIONS

§ 8.1 Where reference is made in this Agreement to a provision of AIA Document A201 or another Contract Document, the reference refers to that provision as amended or supplemented by other provisions of the Contract Documents. A copy of such amended, revised or supplemental provision is incorporated in the contract documents and hereby incorporated by reference herein as a part thereof.

§ 8.2 The Owner's representative:

Director, Real Estate and Asset Management
P.O. Box 1827
Mobile, AL 36633-1827

§ 8.3 The Contractor's representative:

_____
_____
_____

§ 8.4 Neither the Owner's nor the Contractor's representative shall be changed without ten (10) days' prior notice to the other party.

§ 8.5 Insurance and Bonds

§ 8.5.1 Liability of Contractor: To the fullest extent permitted by law, Contractor covenants to release, defend, indemnify, hold harmless, protect, and exonerate both the City and its agents, employees, and representatives, from and against any and all liability, claims (direct and indirect), damages, losses, suits, actions, demands, liens, arbitrations, administrative proceedings, awards, judgments, expenses, costs, and attorneys' fees pertaining to personal injury, bodily injury, death, damage to or destruction of property (including any loss of use), economic loss or damage, labor disputes, safety requirements, performance or non-performance of obligations, certifications, property rights of third parties, sickness or disease, which (1) are caused in whole or in part by the Contractor (herein defined to include but not be limited to Contractor's owners, employees, agents, representatives, subcontractors, suppliers, and invitees or other third parties connected with the Contractor as well as the agents or employees of any of them), or (2) arise out of or are related to work undertaken or to be performed by the Contractor, or (3) arise out of or are related to any other act or omission relating to the Contractor, the Contract, the work under the Contract or otherwise undertaken by the Contractor as defined in the parenthetical of (1) above. It is the specific and express intent of the parties to the contract for the foregoing covenants and indemnity obligations to apply to the fullest extent permitted by applicable law, regardless of whether the liability is caused in whole or in part by a party indemnified hereunder, and whether said liability be caused

AIA Document A101 – 2017. Copyright © 1915, 1918, 1925, 1937, 1951, 1958, 1961, 1963, 1967, 1974, 1977, 1987, 1991, 1997, 2007 and 2017. All rights reserved. "The American Institute of Architects," "American Institute of Architects," "AIA," the AIA Logo, and "AIA Contract Documents" are trademarks of The American Institute of Architects. This draft was produced at 15:55:44 CDT on 05/21/2026 under Subscription No.20240042832 which expires on 07/01/2026, is not for resale, is licensed for one-time use only, and may only be used in accordance with the AIA Contract Documents® Terms of Service. To report copyright violations, e-mail docinfo@aiacontracts.com.
User Notes: (69fcdcac800d4588359ef159)

by, or arise out of, any joint, concurrent, or contributory negligence of a party indemnified hereunder. The contractor agrees it is not a design professional within the meaning of § 41-9A-3, Ala. Code (1975).

§ 8.5.1. This section of the Agreement will survive the expiration or termination of the Agreement.

§ 8.5.2 Contractors Insurance

.1 Workmen's Compensation Insurance: - Statutory-amount and coverage as required by all applicable laws, rules or regulations of the State of Alabama and the United States of America, including the U. S. Longshore and Harbor Workers Act and the Jones Act, and "in rem" endorsements if applicable.

.2 Employee's Liability Insurance shall be provided for limits of liability not less than:

Bodily Injury by Accident	$1,000,000 each accident
Bodily Injury by Disease	$1,000,000 each employee
Bodily Injury by Disease	$1,000,000 each policy

.3 The Contractor shall provide Broad Form (commonly termed Comprehensive) General Liability Insurance (including premises-product-completed operations, independent contractors, and blanket contractual liability), specifically covering the obligations assumed by the Contractor for limits of liability not less than:

Bodily Injury	$1,000,000 each person $1,000,000 each occurrence
Property Damage	$1,000,000 each occurrence; or
Bodily Injury and Property Damage	$1,000,000 combined single limit

.4 Such comprehensive policy shall include the following:

.1 All liability of the Contractor, for the Contractor's Direct Operations

.2 Subcontractor's Operations

.3 Completed Operations Cover, thereby meaning any loss which shall occur after the contract has been completed, but which can be traced back to the Contract

.4 General Aggregate Limit of $2,000,000 shall apply on a "Per Project" Basis

.5 Contractual Liability, meaning thereby; any risk assumed by the Contractor under Hold Harmless Agreements or any other assumption of liability

.6 Broad Form Property Damage Coverage, including Completed Operations

.7 Personal Injury Liability, with employee's exclusions removed

.8 Explosion and Collapse Hazard (if applicable)

.5 Commercial/Business Automobile Liability applicable to all automobiles owned, hired, rented or used by the contractor and automobiles not owned by but used on behalf of the contractor. The automobile liability policy must be provided on either ISO form #CA 00 01 (current edition) or an industry equivalent. In the event the contractor's automobiles haul hazardous materials, the Contractor's policy must be amended to include Pollution Liability-Broadened Coverage (CA9948) or equivalent coverage. Coverage must be maintained until the project has been completed. Policy will provide the following minimum limits:

Bodily Injury	$1,000,000 each person $1,000,000 each occurrence
Property damage	$1,000,000 each occurrence; or,
Bodily Injury and Property damage	$1,000,000 combined single limit

.6 Umbrella/Excess Liability: $2,000,000 combined single limit each occurrence for bodily injury and/or property damage

.7 Builder's Risk Coverage (Property Insurance): The Contractor shall carry for the City, himself, and all Subcontractors a Builder's Risk Policy to cover the full amount of the Contract during construction, fabrication or erection of any equipment.

.1 The Contractor shall purchase and maintain, in a company or companies lawfully authorized to do business in the jurisdiction in which the Project is located, property insurance written on a builder's risk "all-risk" or

AIA Document A101 – 2017. Copyright © 1915, 1918, 1925, 1937, 1951, 1958, 1961, 1963, 1967, 1974, 1977, 1987, 1991, 1997, 2007 and 2017. All rights reserved. "The American Institute of Architects," "American Institute of Architects," "AIA," the AIA Logo, and "AIA Contract Documents" are trademarks of The American Institute of Architects. This draft was produced at 15:55:44 CDT on 05/21/2026 under Subscription No.20240042832 which expires on 07/01/2026, is not for resale, is licensed for one-time use only, and may only be used in accordance with the AIA Contract Documents® Terms of Service. To report copyright violations, e-mail docinfo@aiacontracts.com.
User Notes: (69fcdcac800d4588359ef159)

equivalent policy form in the amount of the initial Contract Sum, plus value of subsequent Contract Modifications and cost of materials supplied or installed by others, comprising total value for the entire Project at the site on a replacement cost basis. Such property insurance shall be maintained, unless otherwise provided in the Contract Documents or otherwise agreed in writing by all persons and entities who are beneficiaries of such insurance, until final payment has been made, or until no person or entity other than the City has an insurable interest in the property, whichever is later. This insurance shall include interests of the City, the Contractor, Subcontractors, Sub-subcontractors, and the Design Professionals in the Project.

.2 Property insurance shall be on an "all-risk" or equivalent policy form and shall include, without limitation, insurance against the perils of fire (with extended coverage) and physical loss or damage including, without duplication of coverage, theft, vandalism, malicious mischief, collapse, windstorm, falsework, testing and startup, temporary buildings and debris removal including demolition occasioned by enforcement of any applicable legal requirements, and shall cover reasonable compensation for Architect's/Engineer's and Contractor's services and expenses required as a result of such insured loss.

.3 If the property insurance requires deductibles, the Contractor shall pay costs not covered because of such deductibles. Deductibles shall be limited to a maximum of $2,500.00 unless the loss is caused by windstorm; then deductible shall be a maximum of three percent (3%) of the insured value.

.4 This property insurance shall cover the full value of equipment, material, and other portions of the Work stored off the site, and also portions of the Work in transit. There shall be no limits on the value of loss per occurrence.

.5 A named storm endorsement is required. The deductible shall be a maximum of three percent (3%) of the insured value.

.8 A Surety authorized to do business in the State of Alabama shall furnish the required Insurance.

.9 The standard ACORD™ format shall be provided. The ACORD™ Certificate must be signed or countersigned by a Licensed Resident Agent of the State of Alabama and the agent's name, address and telephone number must appear on the face of the certificate.

.10 The Surety must have a minimum rating of A/Class VI as reported in the latest issue of Best's Key Rating Guide Property-Casualty, published by Alfred M. Best Company, Inc. if the bid price exceeds $50,000.00.

.11 Contractor shall procure and maintain insurance as specified above:

.1 The insurance shall be written for not less than limits of liability specified in the Contract Documents or required by law, whichever coverage is greater. Coverages, whether written on an occurrence or claims-made basis, shall be maintained without interruption from the date of commencement of the Work until the date of final payment and termination of any coverage required to be maintained after final payment, and, with respect to the Contractor's completed operations coverage, until the expiration of the period for correction of Work or for such other period for maintenance of completed operations coverage as specified in the Contract Documents.

.2 Certificates of insurance acceptable to the City shall be filed with the City within ten (10) calendar days from date of issuance of contract forms for execution. Contractor shall deliver to the City of Mobile, certificates of insurance certifying the existence and limits of the insurance coverages along with separate policy endorsements.

.3 Contractor shall also be responsible for delivering policy renewal certificates to the City of Mobile, and thereafter upon renewal or replacement of each required policy of insurance.

.4 These certificates and the insurance policies shall contain a provision that coverages afforded under the policies will not be cancelled subject to non-renewal nor material change, or allowed to expire without at least thirty (30) days' (except ten (10) days from non-payment) prior written notice has been given to the City.

.5 An additional certificate evidencing continuation of liability coverage, including coverage for completed operations, shall be submitted with the final Application for Payment and thereafter upon renewal or replacement of such coverage until the expiration of the time. Information concerning reduction of coverage on account of revised limits or claims paid under the General Aggregate, or both, shall be furnished by the

AIA Document A101 – 2017. Copyright © 1915, 1918, 1925, 1937, 1951, 1958, 1961, 1963, 1967, 1974, 1977, 1987, 1991, 1997, 2007 and 2017. All rights reserved. "The American Institute of Architects," "American Institute of Architects," "AIA," the AIA Logo, and "AIA Contract Documents" are trademarks of The American Institute of Architects. This draft was produced at 15:55:44 CDT on 05/21/2026 under Subscription No.20240042832 which expires on 07/01/2026, is not for resale, is licensed for one-time use only, and may only be used in accordance with the AIA Contract Documents® Terms of Service. To report copyright violations, e-mail docinfo@aiacontracts.com.
User Notes: (69fcdcac800d4588359ef159)

Contractor with reasonable promptness.

.12 All policies of insurance, except worker's compensation, shall be endorsed to provide that all such insurances are primary and non-contributing with any other insurance maintained by the City of Mobile and endorsed to waive rights of subrogation in favor of the City of Mobile.

.13 The Contractor shall cause the commercial liability coverage required by the Contract Documents to include (1) the City, the Design Consultant/ Engineer and the Design Consultant's/Engineer's Consultants as additional insureds for claims caused in whole or in part by the Contractor's negligent acts or omissions during the Contractor's operations; and (2) the City as an additional insured for claims caused in whole or in part by the Contractor's negligent acts or omissions during the Contractor's completed operations.

§ 8.5.3 Bonds The Contractor shall provide bonds as set forth below:

.1 Contractor shall furnish bonds covering faithful performance of the Contract and payment of obligations arising thereunder.

.2 Upon the request of any person or entity appearing to be a potential beneficiary of bonds covering payment of obligations arising under the Contract, the Contractor shall promptly furnish a copy of the bonds or shall authorize a copy to be furnished.

.3 The Labor and Material Payment Bond and the Performance Bond shall each be for one hundred percent (100%) of the Contract Sum.

.1 Bond shall be submitted with the executed agreement on provided form(s).
.2 Power of Attorney is required for both bonds.
.3 A Surety authorized to do business in the State of Alabama shall furnish both bonds.
.4 A Surety licensed to do business in the State of Alabama must execute the bonds.
.5 The Surety must have a minimum rating of A/Class VI as reported in the latest issue of Best's Key Rating Guide Property-Casualty, published by Alfred M. Best Company, Inc., if the bid price exceeds $50,000.00.
.6 The Surety company shall be required to execute AIA Document G-707, "Consent of Surety to Final Payment" prior to Final Payment being made to the Contractor.

§ 8.7 Warranties
Contractor shall provide a minimum one (1) years warranty from the date of substantial completion of all Labor and Materials for the Work covered by this contract, unless otherwise specified. Labor and Material warranties required by other sections of the construction document shall not conflict with this provision. The most stringent warranty provision shall apply.

§ 8.8 Force Majeure
In the event that either party hereto shall be delayed or hindered in or prevented from the performance of any act required hereunder by reason of strikes, lockouts, labor troubles, inability to procure materials, failure of power, restrictive governmental laws or regulations, riots, insurrection, war, Act of God, or other reason of a like nature not the fault of the party delayed in performing work or doing acts required under the terms of this Agreement, then performance of such act shall be excused for the period of the delay and the period for the performance of any such act shall be extended for a period equivalent to the period of such delay.

ARTICLE 9 ENUMERATION OF CONTRACT DOCUMENTS
§ 9.1 This Agreement is comprised of the following documents:

.1 AIA Document A101™–2017, Standard Form of Agreement Between Owner and Contractor

.2 AIA Document A201™–2017, General Conditions of the Contract for Construction

.3 Drawings- As provided in the City of Mobile CIP Trimmier Park Lights Upgrades Plan Set and Project Manual dated May 20, 2026 and Addenda

.4 Specifications- As provided in the City of Mobile CIP Trimmier Park Lights Upgrades Plan Set and Project Manual dated May 20, 2026 and Addenda

AIA Document A101 – 2017. Copyright © 1915, 1918, 1925, 1937, 1951, 1958, 1961, 1963, 1967, 1974, 1977, 1987, 1991, 1997, 2007 and 2017. All rights reserved. "The American Institute of Architects," "American Institute of Architects," "AIA," the AIA Logo, and "AIA Contract Documents" are trademarks of The American Institute of Architects. This draft was produced at 15:55:44 CDT on 05/21/2026 under Subscription No.20240042832 which expires on 07/01/2026, is not for resale, is licensed for one-time use only, and may only be used in accordance with the AIA Contract Documents® Terms of Service. To report copyright violations, e-mail docinfo@aiacontracts.com.
User Notes: (69fcdcac800d4588359ef159)

Portions of Addenda relating to bidding or proposal requirements are not part of the Contract Documents unless the bidding or proposal requirements are also enumerated in this Article 9.

.8 Other Exhibits:

Exhibit A: Office of Small Business Development Subcontracting and Major Supplier Plan
Exhibit B: Certificate of Liability Insurance
Exhibit C: Performance, Labor and Material Bonds
Exhibit D: E-Verify Documents
Exhibit E: Secretary of State
Exhibit F: Bidding And Contract Requirement Documents

§ 9.2.2 Best Management Practices (BMPs): The Contractor shall be responsible for providing, implementing and maintaining BMPs for sediment and erosion control in full compliance with all applicable Local, State and Federal Codes and Ordinances throughout the contract period. All Work shall be in accordance with the Clean Water Act; the Alabama Water Pollution Control Act; the current version of the Alabama Handbook for Erosion Control, Sediment Control Storm water Management on Construction sites and Urban Areas; and the current version of the Mobile, Alabama City Code Chapter 17 Storm water Management and Flood Control. All Wastewater with oils, grease, paint, mortar, etc., shall be properly contained and disposed of.

§ 9.2.3 Contractor shall comply with all Federal, State and local laws concerning nondiscrimination, including but not limited to City of Mobile Ordinance No. 14-034 which requires, *inter alia*, that all contractors performing work for the City of Mobile not discriminate on the basis of race, creed, color, national origin or disability, require that all subcontractors they engage do the same, and make every reasonable effort to assure that fifteen percent of the work performed under contract be awarded to socially and economically disadvantaged individuals and business entities.

§ 9.2.4 By signing this contract, the contracting parties affirm, for the duration of the agreement, that they will not violate federal immigration law or knowingly employ, hire for employment, or continue to employ an unauthorized alien within the State of Alabama. Furthermore, a contracting party found to be in violation of this provision shall be deemed in breach of the agreement and shall be responsible for all damages resulting therefrom.

§ 9.2.5 Public Contracts with Entities Engaging in certain Boycott Activities

By signing this contract, the Contractor further represents and agrees that it is not currently engaged in, nor will it engage in, any boycott of a person or entity based in or doing business with a jurisdiction with which the State of Alabama can enjoy open trade.

§ 9.2.6 Severability Clause

In case any one or more of the provisions contained in this Agreement shall for any reason be held to be invalid, illegal or unenforceable in any respect, such invalidity, illegality or unenforceability shall not affect any other provisions of this Agreement, but this Agreement shall be construed as if such invalid or illegal or unenforceable provision had never been contained herein. Upon such determination that any term or other provision is invalid, illegal or unenforceable, the court or other tribunal making such determination is authorized and instructed to modify this Agreement so as to effect the original intent of the parties as closely as possible so that the transactions and agreements contemplated herein are consummated as originally contemplated to the fullest extent possible.

§ 9.2.7 Non-Agency Clause

Contractor, in the performance of its operations and obligations hereunder, shall not be deemed to be an agent of City but shall be deemed to be an independent Contractor in every respect and shall take all steps at its own expense, as City may from time to time request, to indicate that it is an independent Contractor. City does not and will not assume any responsibility for the means by which or the manner in which the services by Contractor provided for herein are performed, but on the contrary, Contractor shall be wholly responsible therefore.

ARTICLE 10 USE OF CITY PROJECT MANAGEMENT SOFTWARE (E-BUILDER)

§ 10.1 The City of Mobile utilizes e-Builder, a cloud-based Construction Project Management Information System (PMIS) that streamlines every aspect of construction projects, including planning, estimating, document control, construction, and closeout. The Contractor shall participate in a City-provided training session on the use of e-Builder. This training is mandatory for all personnel responsible for submitting schedules, pay applications, submittals, Requests for Information (RFIs), and other project-related documentation through the e-Builder platform. Training will be provided by the City at no cost to the Contractor. Failure to complete the required training may be considered a material breach of

AIA Document A101 – 2017. Copyright © 1915, 1918, 1925, 1937, 1951, 1958, 1961, 1963, 1967, 1974, 1977, 1987, 1991, 1997, 2007 and 2017. All rights reserved. "The American Institute of Architects," "American Institute of Architects," "AIA," the AIA Logo, and "AIA Contract Documents" are trademarks of The American Institute of Architects. This draft was produced at 15:55:44 CDT on 05/21/2026 under Subscription No.20240042832 which expires on 07/01/2026, is not for resale, is licensed for one-time use only, and may only be used in accordance with the AIA Contract Documents® Terms of Service. To report copyright violations, e-mail docinfo@aiacontracts.com.
User Notes: (69fcdcac800d4588359ef159)

this Agreement, and may delay processing of project documentation.

This Agreement entered into as of the day and year of last execution:

CONTRACTOR:

_____
NAME, TITLE

STATE OF _____)
COUNTY OF _____)

Before me, the undersigned a Notary Public in and for said County and State, personally appeared _____ __ and after being duly sworn, did depose and say that he, as such officer and with full authority, signed the above and foregoing voluntarily as the act of said corporation on the day the same bears date.

Sworn to and subscribed for me this _____ day of _____, 2026.

_____
NOTARY PUBLIC
My Commission Expires: _____

DRAFT

AIA Document A101 – 2017. Copyright © 1915, 1918, 1925, 1937, 1951, 1958, 1961, 1963, 1967, 1974, 1977, 1987, 1991, 1997, 2007 and 2017. All rights reserved. "The American Institute of Architects," "American Institute of Architects," "AIA," the AIA Logo, and "AIA Contract Documents" are trademarks of The American Institute of Architects. This draft was produced at 15:55:44 CDT on 05/21/2026 under Subscription No.20240042832 which expires on 07/01/2026, is not for resale, is licensed for one-time use only, and may only be used in accordance with the AIA Contract Documents® Terms of Service. To report copyright violations, e-mail docinfo@aiacontracts.com.
User Notes:
(69fcdcac800d4588359ef159)

CITY OF MOBILE
By:_____
Spiro N. Cheriogotis, Mayor
Date:_____
ATTEST:

_____
City Clerk

DRAFT

AIA Document A101 – 2017. Copyright © 1915, 1918, 1925, 1937, 1951, 1958, 1961, 1963, 1967, 1974, 1977, 1987, 1991, 1997, 2007 and 2017. All rights reserved. "The American Institute of Architects," "American Institute of Architects," "AIA," the AIA Logo, and "AIA Contract Documents" are trademarks of The American Institute of Architects. This draft was produced at 15:55:44 CDT on 05/21/2026 under Subscription No.20240042832 which expires on 07/01/2026, is not for resale, is licensed for one-time use only, and may only be used in accordance with the AIA Contract Documents® Terms of Service. To report copyright violations, e-mail docinfo@aiacontracts.com.
User Notes: (69fcdcac800d4588359ef159)

MUSCO LIGHTING PROJECT
RELATED DOCUMENTS
ADDENDUM #1, DATED MAY 26, 2026
(For reference only. *Manufacturer literature, calculations, control system summaries, and reference documents are provided solely for informational purposes and shall not constitute Contract Documents unless expressly incorporated by written amendment*)

CITY OF MOBILE - TRIMMIER PARK
LIGHT UPGRADES - PR#068-26

FOR

the City of
Mobile, Alabama

BY

JAGUAR CONSULTING
CHRISTINA MARIE P.E.
PE 50660 - ECA 50377
C: (251) 455-9189
Christy@JagCon.org

INDEX OF DRAWINGS

DRAWING #	DRAWING DESCRIPTION:
T101	TITLE SHEET
E101	ELECTRICAL LEGEND & ABBREVIATIONS & SPECIFICATIONS
E201	ELECTRICAL OVERALL SITE PLAN
E301	ELECTRICAL ONE LINE DIAGRAM & LIGHTING CONTROL WIRING DIAGRAM
E401	ELECTRICAL SCHEDULES & ELEVATIONS
S-1	STRUCTURAL SCOREBOARD ELEVATIONS
S-2	STRUCTURAL SCOREBOARD FOUNDATION DETAILS

SUMMARY OF WORK

BY CONTRACTOR:

- INSTALLATION OF A NEW ELECTRICAL SERVICE PEDESTAL, ELECTRICAL EQUIPMENT, CONDUIT, WIRING, ETC.
- UPGRADE THE EXISTING TRIMMIER PARK FOOTBALL FIELD LIGHTING TO A NEW MUSCO LIGHTING SYSTEM.
- THE DISCONNECTION AND DEMOLITION OF THE EXISTING SCOREBOARD AND THE INSTALLATION OF A NEW OWNER-PROVIDED NEVCO SCOREBOARD.

THE ELECTRICAL CONTRACTOR IS TO PROVIDE ALL NECESSARY EQUIPMENT, RACEWAYS, ETC., FOR A COMPLETE SYSTEM, UNLESS OTHERWISE NOTED. COORDINATE WITH THE CITY OF MOBILE MATERIAL LAY-DOWN AREAS.

BY OWNER:
ALL NEW MUSCO LIGHTING EQUIPMENT, FIXTURES, POLES, ETC., AND THE NEW SCOREBOARD ARE TO BE PROVIDED BY THE OWNER AND INSTALLED BY THE ELECTRICAL CONTRACTOR.

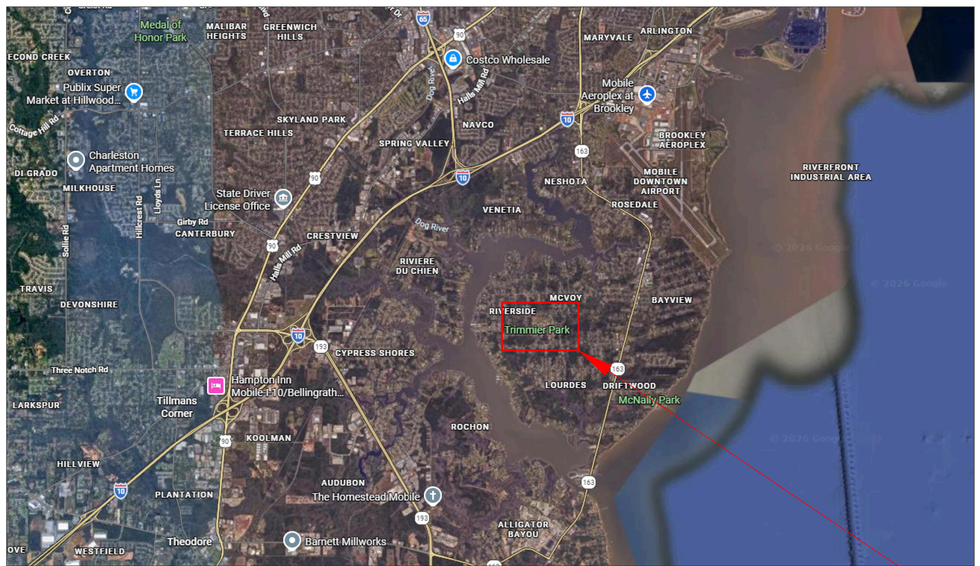

N

1 OVERALL SITE VICINITY MAP

JAGUAR CONSULTING
CHRISTINA MARIE P.E.
PE 50660 - ECA 50377
C: (251) 455-9189
Christy@JagCon.org

ALABAMA LICENSED No. 50660 PROFESSIONAL ENGINEER CHRISTINA MARIE

05/20/2026

NUMBER REVISION	REVISION DESCRIPTION
1	ADDENDUM #1 - 5/26/2026

CITY OF MOBILE - TRIMMIER PARK
LIGHT UPGRADES - PR#068-26
MOBILE, ALABAMA

DESIGNED BY: TMM
DRAWN BY: TMM
CHECKED BY: CM
DATE: 05-20-2026

SHEET TITLE: TITLE SHEET

SHEET: T101

CAPITAL CONTRACT SUMMARY SHEET

AGENDA ITEM SUMMARY SHEET

Agenda of: July 7, 2026

Submitted by:
Matthew Anderson, Dir Of Public Services

Sponsored by:

Purpose and Scope of Project:
2026 Public Services Storm Drainage Repair & Maintenance.

Amount of Contract:
$1,432,149.36

Funding Source
10042096.42070 Contract Labor

ATTACHMENTS:
1. PROJECT #2026-2070-01SW Addendum 1 Item III Proposal (completed)
2. PROJECT #2026-2070-01SW Attachment A Task Order Form
3. PROJECT #2026-2070-01SW Attachment B Change Order Form
4. PROJECT #2026-2070-01SW Attachment C Subcontracting Plan and DBE Utilization Report
5. PROJECT #2026-2070-01SW Attachment D Project Closeout Requirements & Affidavits
6. PROJECT #2026-2070-01SW Attachment E Contractors Insurance Certifications
7. PROJECT #2026-2070-01SW Attachment F E-Verify Affidavit, Registration and SoS Record
8. PROJECT #2026-2070-01SW Attachment G Tax Exemption
9. PROJECT #2026-2070-01SW Item I Invitation to Bid
10. PROJECT #2026-2070-01SW Item II Instructions to Bidders
11. PROJECT #2026-2070-01SW Item III Proposal
12. PROJECT #2026-2070-01SW Item IV Bid Bond
13. PROJECT #2026-2070-01SW Item IX Articles of Agreement
14. PROJECT #2026-2070-01SW Item V Labor and Materials Bond (blank)
15. PROJECT #2026-2070-01SW Item V Labor and Materials Bond (completed)
16. PROJECT #2026-2070-01SW Item VI Performance Bond (blank
17. PROJECT #2026-2070-01SW Item VI Performance Bond (completed)

18. PROJECT #2026-2070-01SW Item VII Insurance
19. PROJECT #2026-2070-01SW Item VIII Special Provisions
20. PROJECT #2026-2070-01SW Item X Supplemental Specifications
21. PROJECT #2026-2070-01SW State of Alabama General Contractor License
22. Resolution for Chris Brewer 2026 Storm Drainage and Maintenance

REVIEWERS:
Kayla Outlaw
Matthew Anderson
Donna Bryars
Cherlina Monteiro
James Barber



2026 PUBLIC SERVICES STORM DRAINAGE REPAIR & MAINTENANCE

PROJECT NO. 2026-2070-01SW

BID DATE – JUNE 10, 2026

* Macros must be enabled

06/08/26

ADDENDUM NO.1
Project No. 2026-2070-01SW
2026 PUBLIC SERVICES STORM DRAINAGE REPAIR & MAINTENANCE

ITEM NO.	DESCRIPTION	BID QTY	BID UNIT	UNIT PRICE WRITTEN IN WORDS	BID UNIT PRICE	BID AMOUNT
BASE BID						
201A 000	CLEARING AND GRUBBING	5	AC	One Thousand Two Hundred Dollars and No Cents	$1,200.00	$6,000.00
206C 000	REMOVING CONCRETE SIDEWALK (INCLUDING SAW CUTTING) (ALL THICKNESSES)	40	SY	Fifteen Dollars and No Cents	$15.00	$600.00
206C 010	REMOVING CONCRETE DRIVEWAY (INCLUDING SAW CUTTING) (ALL THICKNESSES)	55	SY	Fifteen Dollars and No Cents	$15.00	$825.00
206C 020	REMOVING ASPHALT PAVEMENT (INCLUDING SAW CUTTING) (ALL THICKNESSES)	45	SY	Fifteen Dollars and No Cents	$15.00	$675.00
206D 003	REMOVING CONCRETE GUTTER AND/OR CURB (ALL TYPES) (INCLUDING SAW CUTTING) (ALL THICKNESSES)	100	LF	Ten Dollars and No Cents	$10.00	$1,000.00
206D 005	REMOVING PIPE 24" OR LESS DIAMETER	100	LF	Twenty Five Dollars and No Cents	$25.00	$2,500.00
206D 006	REMOVING PIPE 27" -36" DIAMETER	100	LF	Twenty Nine Dollars and No Cents	$29.00	$2,900.00
206D 007	REMOVING PIPE 42" -48" DIAMETER	50	LF	Thirty Five Dollars and No Cents	$35.00	$1,750.00
206D 008	REMOVING PIPE 54" -60" DIAMETER	50	LF	Forty Dollars and No Cents	$40.00	$2,000.00
206E 000	REMOVING INLETS, PARTIAL TOP AND THROAT	10	EA	Seven Hundred Fifty Dollars and No Cents	$750.00	$7,500.00
206E 061	REMOVING TREE (8 - 18 INCH)	5	EA	Three Hundred Fifty Dollars and No Cents	$350.00	$1,750.00

* Macros must be enabled

06/08/26

ADDENDUM NO.1
Project No. 2026-2070-01SW
2026 PUBLIC SERVICES STORM DRAINAGE REPAIR & MAINTENANCE

ITEM NO.	DESCRIPTION	BID QTY	BID UNIT	UNIT PRICE WRITTEN IN WORDS	BID UNIT PRICE	BID AMOUNT
206E 062	REMOVING TREE (19 - 36 INCH)	3	EA	Four Hundred Fifty Dollars and No Cents	$450.00	$1,350.00
206E 063	REMOVING TREE (37 INCH OR LARGER)	3	EA	Seven Hundred Fifty Dollars and No Cents	$750.00	$2,250.00
210A 000	UNCLASSIFIED EXCAVATION (INCLUDING SAW CUTTING)	70	CY	Twenty Five Dollars and No Cents	$25.00	$1,750.00
210D 000	BORROW EXCAVATION (LOOSE TRUCKBED MEASUREMENT) (A-2 OR BETTER)	70	CY	Twenty Five Dollars and No Cents	$25.00	$1,750.00
214A 000	STRUCTURE EXCATION (0' TO 6' DEPTH)	30	CY	Twenty Dollars and No Cents	$20.00	$600.00
260A 000	FLOWABLE FILL	70	CY	Two Hundred Dollars and No Cents	$200.00	$14,000.00
301A 000	CRUSHED AGGREGATE BASE COURSE, TYPE B, PLANT MIXED, 6" COMPACTED THICKNESS	200	TON	Forty Dollars and No Cents	$40.00	$8,000.00
305B 000	57 STONE	150	TON	Eighty Eight Dollars and No Cents	$88.00	$13,200.00
424A 002	SUPERPAVE BITUMINOUS CONCRETE WEARING SURFACE LAYER, PATCHING OR LEVELING, 1/2" MAXIMUM AGGREGATE SIZE MIX, ESAL RANGE C/D	100	TON	Two Hundred Dollars and No Cents	$200.00	$20,000.00
533A 001	15" STORM SEWER (CLASS 3 R.C.)	100	LF	Fifty Dollars and No Cents	$50.00	$5,000.00
533A 002	18" STORM SEWER (CLASS 3 R.C.)	100	LF	Fifty One Dollars and Eighty One Cents	$51.81	$5,181.00
533A 003	24" STORM SEWER (CLASS 3 R.C.)	100	LF	Seventy Six Dollars and Thirty Four Cents	$76.34	$7,634.00

ADDENDUM NO.1
Project No. 2026-2070-01SW
2026 PUBLIC SERVICES STORM DRAINAGE REPAIR & MAINTENANCE

ITEM NO.	DESCRIPTION	BID QTY	BID UNIT	UNIT PRICE WRITTEN IN WORDS	BID UNIT PRICE	BID AMOUNT
533A 004	30" STORM SEWER (CLASS 3 R.C.)	100	LF	One Hundred Ten Dollars and Fifty Five Cents	$110.55	$11,055.00
533A 005	36" STORM SEWER (CLASS 3 R.C.)	100	LF	One Hundred Forty Four Dollars and Ninety Eight Cents	$144.98	$14,498.00
533A 006	42" STORM SEWER (CLASS 3 R.C.)	80	LF	One Hundred Eighty Seven Dollars and Eighty Eight Cents	$187.88	$15,030.40
533A 007	48" STORM SEWER (CLASS 3 R.C.)	80	LF	Two Hundred Forty Two Dollars and Sixty Six Cents	$242.66	$19,412.80
533A 008	54" STORM SEWER (CLASS 3 R.C.)	48	LF	Three Hundred Thirty Five Dollars and Seventy Four Cents	$335.74	$16,115.52
533A 009	60" STORM SEWER (CLASS 3 R.C.)	40	LF	Four Hundred Three Dollars and Eight Cents	$403.08	$16,123.20
539A 001	PIPELINE CLEANING - 12"-24"	1000	LF	Six Dollars and Ninety Cents	$6.90	$6,900.00
539A 002	PIPELINE CLEANING - 27"-36"	1000	LF	Nine Dollars and Twenty Cents	$9.20	$9,200.00
539A 003	PIPELINE CLEANING - 42"-48"	500	LF	Sixteen Dollars and Fifty Cents	$16.50	$8,250.00
539A 010	PIPELINE VIDEOING - 12"-24"	1000	LF	Two Dollars and Thirty Cents	$2.30	$2,300.00
539A 020	PIPELINE VIDEOING - 27"-36"	1000	LF	Three Dollars and Forty Five Cents	$3.45	$3,450.00
539A 030	PIPELINE VIDEOING - 42"-48"	500	LF	Six Dollars and Ninety Cents	$6.90	$3,450.00

ADDENDUM NO.1

Project No. 2026-2070-01SW

2026 PUBLIC SERVICES STORM DRAINAGE REPAIR & MAINTENANCE

ITEM NO.	DESCRIPTION	BID QTY	BID UNIT	UNIT PRICE WRITTEN IN WORDS	BID UNIT PRICE	BID AMOUNT
539A 040	PIPELINE VIDEOING - 54"-60"	125	LF	Eleven Dollars and Fifty Cents	$11.50	$1,437.50
600A 000	MOBILIZATION	7	EA	Twelve Thousand Five Hundred Dollars and No Cents	$12,500.00	$87,500.00
610A 000	LOOSE RIP RAP, CLASS 1	10	TON	One Hundred Seventy Five Dollars and No Cents	$175.00	$1,750.00
610A 001	LOOSE RIP RAP, CLASS 2	10	TON	One Hundred Seventy Five Dollars and No Cents	$175.00	$1,750.00
610A 002	LOOSE RIP RAP, CLASS 3	10	TON	One Hundred Seventy Five Dollars and No Cents	$175.00	$1,750.00
610D 000	FILTER BLANKET, GEOTEXTILE FILTER FABRIC (WOVEN TYPE)	100	SY	Ten Dollars and No Cents	$10.00	$1,000.00
618A 000	CONCRETE SIDEWALK, 4" THICK (INCL. EXCAVATION) (WIDTH VARIES)	150	SY	Eighty Eight Dollars and No Cents	$88.00	$13,200.00
618A 001	CONCRETE SIDEWALK, 6" THICK (INCL. REINFORCEMENT AND EXCAVATION) (WIDTH VARIES)	25	SY	Ninety Nine Dollars and No Cents	$99.00	$2,475.00
618A 002	PEA GRAVEL BEDDING, 4" THICK	25	SY	Twenty Five Dollars and No Cents	$25.00	$625.00
618A 003	CONCRETE SIDEWALK, 4" THICK WITH HEADER CURB ONE SIDE, 4" TO 6" CURB HEIGHT (INCL. EXCAVATION) (WIDTH VARIES)	25	SY	One Hundred Dollars and No Cents	$100.00	$2,500.00
618A 004	CONCRETE SIDEWALK, 4" THICK WITH HEADER CURB BOTH SIDES, 4" TO 6" CURB HEIGHT (INCL. EXCAVATION) (WIDTH VARIES)	25	SY	One Hundred Ten Dollars and No Cents	$110.00	$2,750.00
618A 005	CONCRETE SIDEWALK, 5" THICK (INCL. REINFORCEMENT AND EXCAVATION) (WIDTH VARIES)	50	SY	Ninety Five Dollars and No Cents	$95.00	$4,750.00

ADDENDUM NO.1
Project No. 2026-2070-01SW
2026 PUBLIC SERVICES STORM DRAINAGE REPAIR & MAINTENANCE

ITEM NO.	DESCRIPTION	BID QTY	BID UNIT	UNIT PRICE WRITTEN IN WORDS	BID UNIT PRICE	BID AMOUNT
618B 000	CONCRETE DRIVEWAY (MATCH EXISTING)-INCLUDING REINFORCEMENT& SAW CUTTING	55	SY	One Hundred Dollars and No Cents	$100.00	$5,500.00
618D 001	HANDICAP RAMP (ALL TYPES) (INCL. EXCAVATION)	10	EA	One Thousand Two Hundred Dollars and No Cents	$1,200.00	$12,000.00
618E 001	TRUNCATED DOME INSERT, NEW CONSTRUCTION	10	EA	Two Hundred Fifty Dollars and No Cents	$250.00	$2,500.00
618E 002	MODIFIED TRUNCATED DOME INSERT, NEW CONSTRUCTION	5	EA	Two Hundred Fifty Dollars and No Cents	$250.00	$1,250.00
620A 000	MINOR STRUCTURE CONCRETE	40	CY	Five Hundred Dollars and No Cents	$500.00	$20,000.00
621A 000	JUNCTION BOX, PARTIAL (TOP)	10	EA	One Thousand Eight Hundred Dollars and No Cents	$1,800.00	$18,000.00
621C 001	INLET, TYPE S1 OR S3 (TWO WING) PARTIAL (TOP AND THROAT)	15	EA	Two Thousand Two Hundred Dollars and No Cents	$2,200.00	$33,000.00
621C 002	INLET, TYPE S1 OR S3 (ONE WING) PARTIAL (TOP AND THROAT)	15	EA	Two Thousand Dollars and No Cents	$2,000.00	$30,000.00
621C 003	INLET, CITY C-INLET (NO WING) PARTIAL (TOP AND THROAT)	10	EA	One Thousand Eight Hundred Dollars and No Cents	$1,800.00	$18,000.00
622A 000	MANHOLE COVER / FRAME RESET	10	EA	Five Hundred Dollars and No Cents	$500.00	$5,000.00
623A 000	CONCRETE GUTTER (ALL TYPES) (INCLUDING SAW CUTTING)	70	LF	Thirty Nine Dollars and No Cents	$39.00	$2,730.00
623B 000	CONCRETE CURB (ALL TYPES) (INCLUDING SAW CUTTING)	70	LF	Thirty Nine Dollars and No Cents	$39.00	$2,730.00

ADDENDUM NO.1
Project No. 2026-2070-01SW
2026 PUBLIC SERVICES STORM DRAINAGE REPAIR & MAINTENANCE

ITEM NO.	DESCRIPTION	BID QTY	BID UNIT	UNIT PRICE WRITTEN IN WORDS	BID UNIT PRICE	BID AMOUNT
623C 000	COMBINATION CURB AND GUTTER (INCLUDING SAW CUTTING)	100	LF	Thirty Nine Dollars and No Cents	$39.00	$3,900.00
645U 505	12 INCH CURED IN PLACE LINER	300	LF	Eighty Two Dollars and Fifty Cents	$82.50	$24,750.00
645U 510	15 INCH CURED IN PLACE LINER	300	LF	One Hundred Twenty Six Dollars and Fifty Cents	$126.50	$37,950.00
645U 512	18 INCH CURED IN PLACE LINER	350	LF	One Hundred Fifty Four Dollars and No Cents	$154.00	$53,900.00
645U 515	24 -27 INCH CURED IN PLACE LINER	400	LF	Two Hundred Fifty Eight Dollars and Fifty Cents	$258.50	$103,400.00
645U 520	30 INCH CURED IN PLACE LINER	300	LF	Three Hundred Two Dollars and Fifty Cents	$302.50	$90,750.00
645U 525	36 INCH CURED IN PLACE LINER	400	LF	Three Hundred Thirty Five Dollars and Fifty Cents	$335.50	$134,200.00
645U 530	42 INCH CURED IN PLACE LINER	200	LF	Three Hundred Ninety Dollars and Fifty Cents	$390.50	$78,100.00
645U 535	48 INCH CURED IN PLACE LINER	150	LF	Five Hundred Twenty Two Dollars and Fifty Cents	$522.50	$78,375.00
645U 540	54 INCH CURED IN PLACE LINER	100	LF	Five Hundred Ninety Three Dollars and Eighty Eight Cents	$593.88	$59,388.00
645U 545	60 INCH CURED IN PLACE LINER	50	LF	Six Hundred Ninety Six Dollars and Ninety Five Cents	$696.95	$34,847.50
650A 000	TOPSOIL	50	CY	Thirty Dollars and No Cents	$30.00	$1,500.00

ADDENDUM NO.1
Project No. 2026-2070-01SW
2026 PUBLIC SERVICES STORM DRAINAGE REPAIR & MAINTENANCE

ITEM NO.	DESCRIPTION	BID QTY	BID UNIT	UNIT PRICE WRITTEN IN WORDS	BID UNIT PRICE	BID AMOUNT
654A 000	SOLID SODDING (MATCH EXISTING)	200	SY	Ten Dollars and No Cents	$10.00	$2,000.00
690A 000	DEWATERING	15	DAY	One Hundred Dollars and No Cents	$100.00	$1,500.00
665A 000	TEMPORARY SEEDING	4	AC	Five Hundred Dollars and No Cents	$500.00	$2,000.00
665B 000	TEMPORARY MULCHING	4	TON	Five Hundred Dollars and No Cents	$500.00	$2,000.00
665E 000	POLYETHYLENE	500	SY	Four Dollars and No Cents	$4.00	$2,000.00
665G 000	SAND BAGS	60	EA	Ten Dollars and No Cents	$10.00	$600.00
665J 000	SILT FENCE	200	LF	Five Dollars and No Cents	$5.00	$1,000.00
665K 000	SILT FENCE REMOVAL	200	LF	Two Dollars and No Cents	$2.00	$400.00
665P 005	INLET PROTECTION, STAGE 3 OR 4	6	EA	Three Hundred Dollars and No Cents	$300.00	$1,800.00
665R 000	WATTLES	200	LF	Ten Dollars and No Cents	$10.00	$2,000.00
674A 000	CONSTRUCTION SAFETY FENCE	100	LF	Four Dollars and No Cents	$4.00	$400.00
740A 100	FURNISHING, INSTALLING, AND IMPLEMENTING TRAFFIC CONTROL 2-LANES 25-35 MPH	8	DAY	One Thousand Two Hundred Dollars and No Cents	$1,200.00	$9,600.00

ADDENDUM NO.1
Project No. 2026-2070-01SW
2026 PUBLIC SERVICES STORM DRAINAGE REPAIR & MAINTENANCE

ITEM NO.	DESCRIPTION	BID QTY	BID UNIT	UNIT PRICE WRITTEN IN WORDS	BID UNIT PRICE	BID AMOUNT
740A 200	FURNISHING, INSTALLING, AND IMPLEMENTING TRAFFIC CONTROL OVER 35 MPH	8	DAY	One Thousand Two Hundred Dollars and No Cents	$1,200.00	$9,600.00
740A 300	FURNISHING, INSTALLING, AND IMPLEMENTING TRAFFIC CONTROL OVER 3 LANES	8	DAY	One Thousand Two Hundred Fifty Dollars and No Cents	$1,250.00	$10,000.00
741C 000	PORTABLE SEQUENTIAL ARROW CHEVRON SIGN UNIT	8	DAY	Two Thousand Dollars and No Cents	$2,000.00	$16,000.00
745A 000	UNIFORMED POLICE OFFICER	75	HR	Seventy Dollars and No Cents	$70.00	$5,250.00
999A 001	TRACKHOE & OPERATOR DAILY RATE (SEDIMENT REMOVAL FOR DITCH CLEANING ONLY)	1	DAY	Seven Thousand Five Hundred Dollars and No Cents	$7,500.00	$7,500.00
999A 002	BACKHOE & OPERATOR DAILY RATE (SEDIMENT REMOVAL FOR DITCH CLEANING ONLY)	1	DAY	Five Thousand Dollars and No Cents	$5,000.00	$5,000.00
999A 003	DUMP TRUCK & DRIVER DAILY RATE (SEDIMENT REMOVAL FOR DITCH CLEANING ONLY)	1	DAY	Two Thousand Two Hundred Fifty Dollars and No Cents	$2,250.00	$2,250.00
999A 004	2 LABORERS DAILY RATE (SEDIMENT REMOVAL FOR DITCH CLEANING ONLY)	1	DAY	One Thousand Five Hundred Dollars and No Cents	$1,500.00	$1,500.00
999X 000	WORK OF A SIMILAR NATURE UTILIZING BID ITEMS TO BE DETERMINED BY THE CITY OF MOBILE PROJECT MANAGER	1	LS	Twenty Thousand Dollars and No Cents	$20,000.00	$20,000.00
999Z 000	HYDRO EXCAVATION	16	HR	Four Hundred Twenty Five Dollars and No Cents	$425.00	$6,800.00
		TOTAL BASE BID		**One Million Three Hundred Sixteen Thousand Four Hundred Fifty Seven Dollars and Ninety Two Cents**	$1,316,457.92	

ADDENDUM NO.1
Project No. 2026-2070-01SW
2026 PUBLIC SERVICES STORM DRAINAGE REPAIR & MAINTENANCE

ITEM NO.	DESCRIPTION	BID QTY	BID UNIT	UNIT PRICE WRITTEN IN WORDS	BID UNIT PRICE	BID AMOUNT
ITEM NO.	DESCRIPTION	BID QTY	BID UNIT	UNIT PRICE WRITTEN IN WORDS	BID UNIT PRICE	BID AMOUNT
ADDITIVE BID						
206C 000	REMOVING CONCRETE SIDEWALK (INCL. SAW CUTTING) (ALL THICKNESSES)	20	SY	Fifteen Dollars and No Cents	$15.00	$300.00
206C 010	REMOVING CONCRETE DRIVEWAY (INCLUDING SAW CUTTING) (ALL THICKNESSES)	20	SY	Fifteen Dollars and No Cents	$15.00	$300.00
206C 020	REMOVING ASPHALT PAVEMENT (INCL. SAW CUTTING) (ALL THICKNESSES)	15	SY	Fifteen Dollars and No Cents	$15.00	$225.00
206D 003	REMOVING CONCRETE GUTTER AND/OR CURB (ALL TYPES) (INCLUDING SAW CUTTING) (ALL THICKNESSES)	20	LF	Ten Dollars and No Cents	$10.00	$200.00
206D 005	REMOVING PIPE 24" OR LESS DIAMETER	30	LF	Twenty Five Dollars and No Cents	$25.00	$750.00
206D 006	REMOVING PIPE 27" -36" DIAMETER	30	LF	Twenty Nine Dollars and No Cents	$29.00	$870.00
206E 000	REMOVING INLETS, PARTIAL TOP AND THROAT	4	EA	Seven Hundred Fifty Dollars and No Cents	$750.00	$3,000.00
210A 000	UNCLASSIFIED EXCAVATION (INCL. SAW CUTTING)	20	CY	Twenty Five Dollars and No Cents	$25.00	$500.00
210D 000	BORROW EXCAVATION (LOOSE TRUCKBED MEASUREMENT) (A-2 OR BETTER)	20	CY	Twenty Five Dollars and No Cents	$25.00	$500.00
214A 000	STRUCTURE EXCATION (0' TO 6' DEPTH)	15	CY	Twenty Dollars and No Cents	$20.00	$300.00
301A 000	CRUSHED AGGREGATE BASE COURSE, TYPE B, PLANT MIXED, 6" COMPACTED THICKNESS	50	TON	Forty Dollars and No Cents	$40.00	$2,000.00

ADDENDUM NO.1
Project No. 2026-2070-01SW
2026 PUBLIC SERVICES STORM DRAINAGE REPAIR & MAINTENANCE

ITEM NO.	DESCRIPTION	BID QTY	BID UNIT	UNIT PRICE WRITTEN IN WORDS	BID UNIT PRICE	BID AMOUNT
305B 000	57 STONE	25	TON	Eighty Eight Dollars and No Cents	$88.00	$2,200.00
424A 002	SUPERPAVE BITUMINOUS CONCRETE WEARING SURFACE LAYER, PATCHING OR LEVELING, 1/2" MAXIMUM AGG. SIZE MIX, ESAL RANGE C/D	20	TON	Two Hundred Dollars and No Cents	$200.00	$4,000.00
533A 001	15" STORM SEWER (CLASS 3 R.C.)	24	LF	Fifty Dollars and No Cents	$50.00	$1,200.00
533A 002	18" STORM SEWER (CLASS 3 R.C.)	24	LF	Fifty One Dollars and Eighty One Cents	$51.81	$1,243.44
539A 001	PIPELINE CLEANING - 12"-24"	300	LF	Six Dollars and Ninety Cents	$6.90	$2,070.00
539A 002	PIPELINE CLEANING - 27"-36"	300	LF	Nine Dollars and Twenty Cents	$9.20	$2,760.00
539A 010	PIPELINE VIDEOING - 12"-24"	500	LF	Two Dollars and Thirty Cents	$2.30	$1,150.00
539A 020	PIPELINE VIDEOING - 27"-36"	500	LF	Three Dollars and Forty Five Cents	$3.45	$1,725.00
610D 000	FILTER BLANKET, GEOTEXTILE FILTER FABRIC (WOVEN TYPE)	50	SY	Ten Dollars and No Cents	$10.00	$500.00
618A 000	CONCRETE SIDEWALK, 4" THICK (INCL. EXCAVATION) (WIDTH VARIES)	50	SY	Eighty Eight Dollars and No Cents	$88.00	$4,400.00
618A 005	CONCRETE SIDEWALK, 5" THICK (INCL. REINFORCEMENT AND EXCAVATION) (WIDTH VARIES)	30	SY	Ninety Five Dollars and No Cents	$95.00	$2,850.00
618B 000	CONCRETE DRIVEWAY (MATCH EXISTING)- INCL. REINFORCEMENT& SAW CUTTING	20	SY	One Hundred Dollars and No Cents	$100.00	$2,000.00

ADDENDUM NO.1
Project No. 2026-2070-01SW
2026 PUBLIC SERVICES STORM DRAINAGE REPAIR & MAINTENANCE

ITEM NO.	DESCRIPTION	BID QTY	BID UNIT	UNIT PRICE WRITTEN IN WORDS	BID UNIT PRICE	BID AMOUNT
620A 000	MINOR STRUCTURE CONCRETE	10	CY	Five Hundred Dollars and No Cents	$500.00	$5,000.00
621A 000	JUNCTION BOX, PARTIAL (TOP)	5	EA	One Thousand Eight Hundred Dollars and No Cents	$1,800.00	$9,000.00
621C 001	INLET, TYPE S1 OR S3 (TWO WING) PARTIAL (TOP AND THROAT)	6	EA	Two Thousand Two Hundred Dollars and No Cents	$2,200.00	$13,200.00
621C 002	INLET, TYPE S1 OR S3 (ONE WING) PARTIAL (TOP AND THROAT)	6	EA	Two Thousand Dollars and No Cents	$2,000.00	$12,000.00
621C 003	INLET, CITY C-INLET (NO WING) PARTIAL (TOP AND THROAT)	5	EA	One Thousand Eight Hundred Dollars and No Cents	$1,800.00	$9,000.00
623A 000	CONCRETE GUTTER (ALL TYPES) (INCL. SAW CUTTING)	20	LF	Thirty Nine Dollars and No Cents	$39.00	$780.00
623B 000	CONCRETE CURB (ALL TYPES) (INCL. SAW CUTTING)	25	LF	Thirty Nine Dollars and No Cents	$39.00	$975.00
623C 000	COMBINATION CURB AND GUTTER (INCL. SAW CUTTING)	30	LF	Thirty Nine Dollars and No Cents	$39.00	$1,170.00
623A 000	CONCRETE GUTTER (ALL TYPES) (INCL. SAW CUTTING)	25	LF	Thirty Nine Dollars and No Cents	$39.00	$975.00
623B 000	CONCRETE CURB (ALL TYPES) (INCL. SAW CUTTING)	50	LF	Thirty Nine Dollars and No Cents	$39.00	$1,950.00
623C 000	COMBINATION CURB AND GUTTER (INCL. SAW CUTTING)	1	LF	Thirty Nine Dollars and No Cents	$39.00	$39.00
623A 000	CONCRETE GUTTER (ALL TYPES) (INCL. SAW CUTTING)	1	LF	Thirty Nine Dollars and No Cents	$39.00	$39.00

ADDENDUM NO.1
Project No. 2026-2070-01SW
2026 PUBLIC SERVICES STORM DRAINAGE REPAIR & MAINTENANCE

ITEM NO.	DESCRIPTION	BID QTY	BID UNIT	UNIT PRICE WRITTEN IN WORDS	BID UNIT PRICE	BID AMOUNT
623B 000	CONCRETE CURB (ALL TYPES) (INCL. SAW CUTTING)	300	LF	Thirty Nine Dollars and No Cents	$39.00	$11,700.00
623C 000	COMBINATION CURB AND GUTTER (INCL. SAW CUTTING)	30	LF	Thirty Nine Dollars and No Cents	$39.00	$1,170.00
623A 000	CONCRETE GUTTER (ALL TYPES) (INCL. SAW CUTTING)	100	LF	Thirty Nine Dollars and No Cents	$39.00	$3,900.00
623B 000	CONCRETE CURB (ALL TYPES) (INCL. SAW CUTTING)	100	LF	Thirty Nine Dollars and No Cents	$39.00	$3,900.00
623C 000	COMBINATION CURB AND GUTTER (INCL. SAW CUTTING)	100	LF	Thirty Nine Dollars and No Cents	$39.00	$3,900.00
623A 000	CONCRETE GUTTER (ALL TYPES) (INCL. SAW CUTTING)	50	LF	Thirty Nine Dollars and No Cents	$39.00	$1,950.00

TOTAL ADDITIVE BID	**One Hundred Fifteen Thousand Six Hundred Ninety One Dollars and Forty Four Cents**	**$115,691.44**

ALL ITEMS SHALL BE CONSIDERED IN-PLACE. PRICES SHALL INCLUDE ALL LABOR, EQUIPMENT, MATERIALS, AND REMOVALS AS REQUIRED FOR CONSTRUCTION OF THE REQUIRED WORK

COMPANY Chris Brewer Contracting
SIGNATURE
DATE 06/10/26

BY USE OF THIS SPREADSHEET, CONTRACTOR ASSUMES ALL RESPONSIBILTY FOR ANY AND ALL ERRORS.

ADDENDUM NO. 1

2026 PUBLIC SERVICES STORM DRAINAGE REPAIR & MAINTENANCE

CITY OF MOBILE PROJECT NO. 2026-2070-01SW
BID DATE: JUNE 10, 2026
ADDENDUM NO. 1
ISSUED: JUNE 8, 2026

THE CONTRACT DOCUMENTS AND SPECIFICATIONS SHALL BE CHANGED AS FOLLOWS:

1. **REPLACE "ITEM III, PROPOSAL", IN ITS ENTIRETY WITH THE REVISED ADDENDUM NO. 1 "ITEM III, PROPOSAL". THE ORIGINAL "ITEM III, PROPOSAL" MAY REMAIN BLANK IN THE CONTRACT. COMPLETE THE ATTACHED ADDENDUM NO. 1 "ITEM III, PROPOSAL" AND PLACE IT BEHIND THE FRONT COVER OF THE CONTRACT. THE REVISED PROPOSAL INCLUDES THE FOLLOWING CHANGES.**
    a. **ADDED PAY ITEM 201A-000 CLEARING AND GRUBBING**
    b. **REMOVAL ITEMS REVISED TO INCLUDE ALL THICKNESSES**
    c. **ADDED PAY ITEM 600A-000 MOBILIZATION. MOBILIZATION WILL BE PAID ONLY ONCE FOR EACH CITY COUNCIL DISTRICT PER PROJECT CYCLE.**
    d. **ADDED PAY ITEM 622A-000 MANHOLE COVER/FRAME RESET**
    e. **ADDED PAY ITEM 999Z-000 HYDRO EXCAVATION. THIS CAN BE PERFORMED BY HYDRO VACUUM OR AIR SPADE.**

THE FOLLOWING COMMENTS ARE PROVIDED FOR CLARIFICATION.

1. **THE ENGINEERING ESTIMATE IS BETWEEN $ 2.0 – 2.5 MILLION.**
2. **SEDIMENT REMOVAL FROM DITCHES WILL BE PAID BY DAILY RATES, NOT BY VOLUME OF SEDIMENT. PAYMENT WILL ONLY BE MADE FOR TIME WORKED. SEDIMENT REMOVAL WILL BE FROM DITCHES WITHIN EXISTING EASEMENT/ROW.**
3. **INLET/STRUCTURE REPAIR WILL BE PAID FOR BY ITEM 620 OR 621, AS DETERMINED BY THE PSPM.**
4. **CLEANING OF STRUCTURES SHALL BE SUBSIDIARY TO ITEMS 539 OR 621, AS DETERMINED BY THE PSPM.**
5. **CUTTING OF ROOTS SHALL BE SUBSIDIARY TO ITEM 999Z.**
6. **LOCATING/UNCOVERING MANHOLES SHALL BE SUBSIDIARY OF ITEM 621A.**
7. **The sign in sheet from the pre-bid meeting is attached.**

ATTACHED BID PROPOSAL SPREADSHEET:

INCLUDED IN ADDENDUM NO. 1 IS THE ATTACHED SPREADSHEET OF THE BID PROPOSAL. IT IS THE CONTRACTOR'S RESPONSIBILITY TO ENSURE ALL INFORMATION ON THE SPREADSHEET IS CORRECT. IF THE SPREADSHEET IS USED, IT MAY REPLACE SHEETS 5-18 OF THIS ADDENDUM NO 1.

CONTRACTOR SHALL ATTACH THE ENTIRE COMPLETED ADDENDUM NO. 1 IMMEDIATELY BEHIND THE COVER OF THE CONTRACT DOCUMENTS AND SPECIFICATIONS FOR THE BID SUBMITTAL.

ADDENDUM NO. 1

We, as duly authorized representatives of CBC, Inc. (Contractor), do hereby certify that we have reviewed Addendum No. 1 and that bid prices submitted herewith are inclusive of this Addendum.

Signature

6/8/26
Date

Carson Tortorich
Printed Name

CONTRACTOR SHALL ATTACH THE ENTIRE COMPLETED ADDENDUM NO. 1 IMMEDIATELY BEHIND THE COVER OF THE CONTRACT DOCUMENTS AND SPECIFICATIONS FOR THE BID SUBMITTAL.

ADDENDUM NO. 1

ADDENDUM NO. 1

ITEM III
PROPOSAL

TO: Honorable Mayor
City of Mobile
Mobile, Alabama

Date 6/8/26

The undersigned, as Bidder, hereby declares that he has examined the site of the work and is fully aware of conditions pertaining to the place where the work is to be done. The Bidder also declares that he has carefully examined the Instructions to Bidders, the General Conditions of the Specifications and the drawings, as prepared by the PSA-PM, as well as the premises.

Project Name: 2026 PUBLIC SERVICES STORM DRAINAGE REPAIR & MAINTENANCE
Project No: 2026-2070-01SW
Project Description: Repair of storm drainage structures, ditches, and related roadway items
Major work items include: Repair and maintenance of storm drainage pipes, inlets, inlet tops, paved and unpaved ditches, sediment removal and roadway repairs

The Bidder further agrees to construct the improvements in accordance with the Task Order issued for the specified work.

The Bidder proposes and accepts the Articles of Agreement with the City of Mobile, Mobile, Alabama to furnish all necessary materials, equipment, tools, machinery, and means of transportation, and labor to complete the construction of the project.

All work performed under this contract shall be in accordance with the State of Alabama Highway Department Standard Specifications for Highway Construction, 2018 Edition, with all latest additions and modifications by the Public Services Administration (PSA) Department for the City of Mobile, or as amended herein.

The quantities for bid items listed on the proposal sheets are estimated quantities. Payment to the Contractor will be made only for the actual quantities of work performed and accepted on materials furnished in accordance with the contract. The scheduled quantities of work to be done and materials to be furnished may each be increased, decreased or omitted as herein provided.

No interpretations of the meaning of the plans, specifications or other bid documents will be made to any bidder orally. Any request for such interpretation should be in writing, addressed to City of Mobile PSA Department, 1900 Hurtel Street, Mobile, AL 36605 (dorothy.eldridge@cityofmobile.gov). In order to receive consideration, the request must be received before 12:00 p.m. on June 8, 2026. Any such interpretation request and/or any supplemental instructions will be mailed, emailed, or delivered to all prospective bidders.

ADDENDUM NO. 1

2026-2070-01SW

2026 PUBLIC SERVICES STORM DRAINAGE REPAIR & MAINTENANCE

BASE BID

ITEM NO.	DESCRIPTION	QTY	UNIT	UNIT PRICE	UNIT PRICE (WRITTEN IN WORDS)	CONTRACT PRICE
201A 000	CLEARING AND GRUBBING	5	AC		_____DOLLARS AND _____CENTS	
206C 000	REMOVING CONCRETE SIDEWALK (INCLUDING SAW CUTTING) (ALL THICKNESSES)	40	SY		_____DOLLARS AND _____CENTS	
206C 010	REMOVING CONCRETE DRIVEWAY (INCLUDING SAW CUTTING) (ALL THICKNESSES)	55	SY		_____DOLLARS AND _____CENTS	
206C 020	REMOVING ASPHALT PAVEMENT (INCLUDING SAW CUTTING) (ALL THICKNESSES)	45	SY		_____DOLLARS AND _____CENTS	
206D 003	REMOVING CONCRETE GUTTER AND/OR CURB (ALL TYPES) (INCLUDING SAW CUTTING) (ALL THICKNESSES)	100	LF		_____DOLLARS AND _____CENTS	
206D 005	REMOVING PIPE 24" OR LESS DIAMETER	100	LF		_____DOLLARS AND _____CENTS	
206D 006	REMOVING PIPE 27" - 36" DIAMETER	100	LF		_____DOLLARS AND _____CENTS	
206D 007	REMOVING PIPE 42" - 48" DIAMETER	50	LF		_____DOLLARS AND _____CENTS	
206D 008	REMOVING PIPE 54" - 60" DIAMETER	50	LF		_____DOLLARS AND _____CENTS	

ADDENDUM NO. 1

ITEM NO.	DESCRIPTION	QTY	UNIT	UNIT PRICE	UNIT PRICE (WRITTEN IN WORDS)	CONTRACT PRICE
206E 000	REMOVING INLETS, PARTIAL TOP AND THROAT	10	EA		_____DOLLARS AND _____CENTS	
206E 061	REMOVING TREE (8 - 18 INCH)	5	EA		_____DOLLARS AND _____CENTS	
206E 062	REMOVING TREE (19 - 36 INCH)	3	EA		_____DOLLARS AND _____CENTS	
206E 063	REMOVING TREE (37 INCH OR LARGER)	3	EA		_____DOLLARS AND _____CENTS	
210A 000	UNCLASSIFIED EXCAVATION (INCLUDING SAW CUTTING)	70	CY		_____DOLLARS AND _____CENTS	
210D 000	BORROW EXCAVATION (LOOSE TRUCKBED MEASUREMENT) (A-2 OR BETTER)	70	CY		_____DOLLARS AND _____CENTS	
214A 000	STRUCTURE EXCATION (0' TO 6' DEPTH)	30	CY		_____DOLLARS AND _____CENTS	
260A 000	FLOWABLE FILL	70	CY		_____DOLLARS AND _____CENTS	
301A 000	CRUSHED AGGREGATE BASE COURSE, TYPE B, PLANT MIXED, 6" COMPACTED THICKNESS	200	TON		_____DOLLARS AND _____CENTS	
305B 000	57 STONE	150	TON		_____DOLLARS AND _____CENTS	

ADDENDUM NO. 1

ITEM NO.	DESCRIPTION	QTY	UNIT	UNIT PRICE	UNIT PRICE (WRITTEN IN WORDS)	CONTRACT PRICE
424A 002	SUPERPAVE BITUMINOUS CONCRETE WEARING SURFACE LAYER, PATCHING OR LEVELING, 1/2" MAXIMUM AGGREGATE SIZE MIX, ESAL RANGE C/D	100	TON		_____DOLLARS AND _____CENTS	
533A 001	15" STORM SEWER (CLASS 3 R.C.)	100	LF		_____DOLLARS AND _____CENTS	
533A 002	18" STORM SEWER (CLASS 3 R.C.)	100	LF		_____DOLLARS AND _____CENTS	
533A 003	24" STORM SEWER (CLASS 3 R.C.)	100	LF		_____DOLLARS AND _____CENTS	
533A 004	30" STORM SEWER (CLASS 3 R.C.)	100	LF		_____DOLLARS AND _____CENTS	
533A 005	36" STORM SEWER (CLASS 3 R.C.)	100	LF		_____DOLLARS AND _____CENTS	
533A 006	42" STORM SEWER (CLASS 3 R.C.)	80	LF		_____DOLLARS AND _____CENTS	
533A 007	48" STORM SEWER (CLASS 3 R.C.)	80	LF		_____DOLLARS AND _____CENTS	
533A 008	54" STORM SEWER (CLASS 3 R.C.)	48	LF		_____DOLLARS AND _____CENTS	
533A 009	60" STORM SEWER (CLASS 3 R.C.)	40	LF		_____DOLLARS AND _____CENTS	
539A 001	PIPELINE CLEANING - 12"-24"	1000	LF		_____DOLLARS AND _____CENTS	

ADDENDUM NO. 1

ITEM NO.	DESCRIPTION	QTY	UNIT	UNIT PRICE	UNIT PRICE (WRITTEN IN WORDS)	CONTRACT PRICE
539A 002	PIPELINE CLEANING - 27"-36"	1000	LF		_____ DOLLARS AND _____ CENTS	
539A 003	PIPELINE CLEANING - 42"-48"	500	LF		_____ DOLLARS AND _____ CENTS	
539A 010	PIPELINE VIDEOING - 12"-24"	1000	LF		_____ DOLLARS AND _____ CENTS	
539A 020	PIPELINE VIDEOING - 27"-36"	1000	LF		_____ DOLLARS AND _____ CENTS	
539A 030	PIPELINE VIDEOING - 42"-48"	500	LF		_____ DOLLARS AND _____ CENTS	
539A 040	PIPELINE VIDEOING - 54"-60"	125	LF		_____ DOLLARS AND _____ CENTS	
600A 000	MOBILIZATION	7	EA		_____ DOLLARS AND _____ CENTS	
610A 000	LOOSE RIP RAP, CLASS 1	10	TON		_____ DOLLARS AND _____ CENTS	
610A 001	LOOSE RIP RAP, CLASS 2	10	TON		_____ DOLLARS AND _____ CENTS	
610A 002	LOOSE RIP RAP, CLASS 3	10	TON		_____ DOLLARS AND _____ CENTS	
610D 000	FILTER BLANKET, GEOTEXTILE FILTER FABRIC (WOVEN TYPE)	100	SY		_____ DOLLARS AND _____ CENTS	
618A 000	CONCRETE SIDEWALK, 4" THICK (INCL. EXCAVATION) (WIDTH VARIES)	150	SY		_____ DOLLARS AND _____ CENTS	

ITEM NO.	DESCRIPTION	QTY	UNIT	UNIT PRICE	UNIT PRICE (WRITTEN IN WORDS)	CONTRACT PRICE
618A 001	CONCRETE SIDEWALK, 6" THICK (INCL. REINFORCEMENT AND EXCAVATION) (WIDTH VARIES)	25	SY		_____DOLLARS AND _____CENTS	
618A 002	PEA GRAVEL BEDDING, 4" THICK	25	SY		_____DOLLARS AND _____CENTS	
618A 003	CONCRETE SIDEWALK, 4" THICK WITH HEADER CURB ONE SIDE, 4" TO 6" MAX CURB HEIGHT (INCL. EXCAVATION) (WIDTH VARIES)	25	SY		_____DOLLARS AND _____CENTS	
618A 004	CONCRETE SIDEWALK, 4" THICK WITH HEADER CURB BOTH SIDES, 4" TO 6" CURB HEIGHT (INCL. EXCAVATION) (WIDTH VARIES)	25	SY		_____DOLLARS AND _____CENTS	
618A 005	CONCRETE SIDEWALK, 5" THICK (INCL. REINFORCEMENT AND EXCAVATION) (WIDTH VARIES)	50	SY		_____DOLLARS AND _____CENTS	
618B 000	CONCRETE DRIVEWAY (MATCH EXISTING)- INCLUDING REINFORCEMENT& SAW CUTTING	55	SY		_____DOLLARS AND _____CENTS	
618D 001	HANDICAP RAMP (ALL TYPES) (INCL EXCAVATION)	10	EA		_____DOLLARS AND _____CENTS	

ADDENDUM NO. 1

ITEM NO.	DESCRIPTION	QTY	UNIT	UNIT PRICE	UNIT PRICE (WRITTEN IN WORDS)	CONTRACT PRICE
618E 001	TRUNCATED DOME INSERT, NEW CONSTRUCTION	10	EA		_____DOLLARS AND _____CENTS	
618E 002	MODIFIED TRUNCATED DOME INSERT, NEW CONSTRUCTION	5	EA		_____DOLLARS AND _____CENTS	
620A 000	MINOR STRUCTURE CONCRETE	40	CY		_____DOLLARS AND _____CENTS	
621A 000	JUNCTION BOX, PARTIAL (TOP)	10	EA		_____DOLLARS AND _____CENTS	
621C 001	INLET, TYPE S1 OR S3 (TWO WING) PARTIAL (TOP AND THROAT)	15	EA		_____DOLLARS AND _____CENTS	
621C 002	INLET, TYPE S1 OR S3 (ONE WING) PARTIAL (TOP AND THROAT)	15	EA		_____DOLLARS AND _____CENTS	
621C 003	INLET, CITY C-INLET (NO WING) PARTIAL (TOP AND THROAT)	10	EA		_____DOLLARS AND _____CENTS	
622A 000	MANHOLE COVER/FRAME RESET	10	EA		_____DOLLARS AND _____CENTS	
623A 000	CONCRETE GUTTER (ALL TYPES) (INCLUDING SAW CUTTING)	70	LF		_____DOLLARS AND _____CENTS	
623B 000	CONCRETE CURB (ALL TYPES) (INCLUDING SAW CUTTING)	70	LF		_____DOLLARS AND _____CENTS	
623C 000	COMBINATION CURB AND GUTTER (INCLUDING SAW CUTTING)	100	LF		_____DOLLARS AND _____CENTS	

ADDENDUM NO. 1

ITEM NO.	DESCRIPTION	QTY	UNIT	UNIT PRICE	UNIT PRICE (WRITTEN IN WORDS)	CONTRACT PRICE
645U 505	12 INCH CURED IN PLACE LINER	300	LF		_____DOLLARS AND _____CENTS	
645U 510	15 INCH CURED IN PLACE LINER	300	LF		_____DOLLARS AND _____CENTS	
645U 512	18 INCH CURED IN PLACE LINER	350	LF		_____DOLLARS AND _____CENTS	
645U 515	24 -27 INCH CURED IN PLACE LINER	400	LF		_____DOLLARS AND _____CENTS	
645U 520	30 INCH CURED IN PLACE LINER	300	LF		_____DOLLARS AND _____CENTS	
645U 525	36 INCH CURED IN PLACE LINER	400	LF		_____DOLLARS AND _____CENTS	
645U 530	42 INCH CURED IN PLACE LINER	200	LF		_____DOLLARS AND _____CENTS	
645U 535	48 INCH CURED IN PLACE LINER	150	LF		_____DOLLARS AND _____CENTS	
645U 540	54 INCH CURED IN PLACE LINER	100	LF		_____DOLLARS AND _____CENTS	
645U 545	60 INCH CURED IN PLACE LINER	50	LF		_____DOLLARS AND _____CENTS	
650A 000	TOPSOIL	50	CY		_____DOLLARS AND _____CENTS	
654A 000	SOLID SODDING (MATCH EXISTING)	200	SY		_____DOLLARS AND _____CENTS	
690A 000	DEWATERING	15	DAY		_____DOLLARS AND _____CENTS	

ADDENDUM NO. 1

ITEM NO.	DESCRIPTION	QTY	UNIT	UNIT PRICE	UNIT PRICE (WRITTEN IN WORDS)	CONTRACT PRICE
665A 000	TEMPORARY SEEDING	4	AC		_____DOLLARS AND _____CENTS	
665B 000	TEMPORARY MULCHING	4	TON		_____DOLLARS AND _____CENTS	
665E 000	POLYETHYLENE	500	SY		_____DOLLARS AND _____CENTS	
665G 000	SAND BAGS	60	EA		_____DOLLARS AND _____CENTS	
665J 000	SILT FENCE	200	LF		_____DOLLARS AND _____CENTS	
665K 000	SILT FENCE REMOVAL	200	LF		_____DOLLARS AND _____CENTS	
665P 005	INLET PROTECTION, STAGE 3 OR 4	6	EA		_____DOLLARS AND _____CENTS	
665R 000	WATTLES	200	LF		_____DOLLARS AND _____CENTS	
674A 000	CONSTRUCTION SAFETY FENCE	100	LF		_____DOLLARS AND _____CENTS	
740A 100	FURNISHING, INSTALLING, AND IMPLEMENTING TRAFFIC CONTROL 2-LANES 25-35 MPH	8	DAY		_____DOLLARS AND _____CENTS	
740A 200	FURNISHING, INSTALLING, AND IMPLEMENTING TRAFFIC CONTROL OVER 35 MPH	8	DAY		_____DOLLARS AND _____CENTS	

ADDENDUM NO. 1

ITEM NO.	DESCRIPTION	QTY	UNIT	UNIT PRICE	UNIT PRICE (WRITTEN IN WORDS)	CONTRACT PRICE
740A 300	FURNISHING, INSTALLING, AND IMPLEMENTING TRAFFIC CONTROL OVER 3 LANES	8	DAY		_____DOLLARS AND _____CENTS	
741C 000	PORTABLE SEQUENTIAL ARROW CHEVRON SIGN UNIT	8	DAY		_____DOLLARS AND _____CENTS	
745A 000	UNIFORMED POLICE OFFICER	75	HR		_____DOLLARS AND _____CENTS	
999A 001	TRACKHOE & OPERATOR DAILY RATE (SEDIMENT REMOVAL FOR DITCH CLEANING ONLY)	1	DAY		_____DOLLARS AND _____CENTS	
999A 002	BACKHOE & OPERATOR DAILY RATE (SEDIMENT REMOVAL FOR DITCH CLEANING ONLY)	1	DAY		_____DOLLARS AND _____CENTS	
999A 003	DUMP TRUCK & DRIVER DAILY RATE (SEDIMENT REMOVAL FOR DITCH CLEANING ONLY)	1	DAY		_____DOLLARS AND _____CENTS	
999A 004	2 LABORERS DAILY RATE (SEDIMENT REMOVAL FOR DITCH CLEANING ONLY)	1	DAY		_____DOLLARS AND _____CENTS	

ADDENDUM NO. 1

ITEM NO.	DESCRIPTION	QTY	UNIT	UNIT PRICE	UNIT PRICE (WRITTEN IN WORDS)	CONTRACT PRICE
999X 000	WORK OF A SIMILAR NATURE UTILIZING BID ITEMS TO BE DETERMINED BY THE CITY OF MOBILE PROJECT MANAGER	1	LS	$20,000.00	TWENTY THOUSAND DOLLARS AND NO CENTS	
999Z-000	HYDRO EXCAVATION	16	HR		_____ DOLLARS AND _____ CENTS	
				TOTAL BASE BID		

ADDITIVE BID

ITEM NO.	DESCRIPTION	QTY	UNIT	UNIT PRICE	UNIT PRICE (WRITTEN IN WORDS)	CONTRACT PRICE
206C 000	REMOVING CONCRETE SIDEWALK (INCL. SAW CUTTING) (ALL THICKNESSES)	20	SY		_____ DOLLARS AND _____ CENTS	
206C 010	REMOVING CONCRETE DRIVEWAY (INCLUDING SAW CUTTING) (ALL THICKNESSES)	20	SY		_____ DOLLARS AND _____ CENTS	
206C 020	REMOVING ASPHALT PAVEMENT (INCL. SAW CUTTING) (ALL THICKNESSES)	15	SY		_____ DOLLARS AND _____ CENTS	

ADDENDUM NO. 1

ITEM NO.	DESCRIPTION	QTY	UNIT	UNIT PRICE	UNIT PRICE (WRITTEN IN WORDS)	CONTRACT PRICE
206D 003	REMOVING CONCRETE GUTTER AND/OR CURB (ALL TYPES) (INCLUDING SAW CUTTING) (ALL THICKNESSES)	20	LF		_____DOLLARS AND _____CENTS	
206D 005	REMOVING PIPE 24" OR LESS DIAMETER	30	LF		_____DOLLARS AND _____CENTS	
206D 006	REMOVING PIPE 27" -36" DIAMETER	30	LF		_____DOLLARS AND _____CENTS	
206E 000	REMOVING INLETS, PARTIAL TOP AND THROAT	4	EA		_____DOLLARS AND _____CENTS	
210A 000	UNCLASSIFIED EXCAVATION (INCL. SAW CUTTING)	20	CY		_____DOLLARS AND _____CENTS	
210D 000	BORROW EXCAVATION (LOOSE TRUCKBED MEASUREMENT) (A-2 OR BETTER)	20	CY		_____DOLLARS AND _____CENTS	
214A 000	STRUCTURE EXCATION (0' TO 6' DEPTH)	15	CY		_____DOLLARS AND _____CENTS	
301A 000	CRUSHED AGGREGATE BASE COURSE, TYPE B, PLANT MIXED, 6" COMPACTED THICKNESS	50	TON		_____DOLLARS AND _____CENTS	
305B 000	57 STONE	25	TON		_____DOLLARS AND _____CENTS	

ADDENDUM NO. 1

ITEM NO.	DESCRIPTION	QTY	UNIT	UNIT PRICE	UNIT PRICE (WRITTEN IN WORDS)	CONTRACT PRICE
424A 002	SUPERPAVE BITUMINOUS CONCRETE WEARING SURFACE LAYER, PATCHING OR LEVELING, 1/2" MAXIMUM AGG. SIZE MIX, ESAL RANGE C/D	20	TON		_____DOLLARS AND _____CENTS	
533A 001	15" STORM SEWER (CLASS 3 R.C.)	24	LF		_____DOLLARS AND _____CENTS	
533A 002	18" STORM SEWER (CLASS 3 R.C.)	24	LF		_____DOLLARS AND _____CENTS	
539A 001	PIPELINE CLEANING - 12"-24"	300	LF		_____DOLLARS AND _____CENTS	
539A 002	PIPELINE CLEANING - 27"-36"	300	LF		_____DOLLARS AND _____CENTS	
539A 010	PIPELINE VIDEOING - 12"-24"	500	LF		_____DOLLARS AND _____CENTS	
539A 020	PIPELINE VIDEOING - 27"-36"	500	LF		_____DOLLARS AND _____CENTS	
610D 000	FILTER BLANKET, GEOTEXTILE FILTER FABRIC (WOVEN TYPE)	50	SY		_____DOLLARS AND _____CENTS	
618A 000	CONCRETE SIDEWALK, 4" THICK (INCL. EXCAVATION) (WIDTH VARIES)	50	SY		_____DOLLARS AND _____CENTS	

ADDENDUM NO. 1

ITEM NO.	DESCRIPTION	QTY	UNIT	UNIT PRICE	UNIT PRICE (WRITTEN IN WORDS)	CONTRACT PRICE
618A 005	CONCRETE SIDEWALK, 5" THICK (INCL. REINFORCEMENT AND EXCAVATION) (WIDTH VARIES)	30	SY		_____DOLLARS AND _____CENTS	
618B 000	CONCRETE DRIVEWAY (MATCH EXISTING)- INCL. REINFORCEMENT& SAW CUTTING	20	SY		_____DOLLARS AND _____CENTS	
620A 000	MINOR STRUCTURE CONCRETE	10	CY		_____DOLLARS AND _____CENTS	
621A 000	JUNCTION BOX, PARTIAL (TOP)	5	EA		_____DOLLARS AND _____CENTS	
621C 001	INLET, TYPE S1 OR S3 (TWO WING) PARTIAL (TOP AND THROAT)	6	EA		_____DOLLARS AND _____CENTS	
621C 002	INLET, TYPE S1 OR S3 (ONE WING) PARTIAL (TOP AND THROAT)	6	EA		_____DOLLARS AND _____CENTS	
621C 003	INLET, CITY C-INLET (NO WING) PARTIAL (TOP AND THROAT)	5	EA		_____DOLLARS AND _____CENTS	
623A 000	CONCRETE GUTTER (ALL TYPES) (INCL. SAW CUTTING)	20	LF		_____DOLLARS AND _____CENTS	
623B 000	CONCRETE CURB (ALL TYPES) (INCL. SAW CUTTING)	25	LF		_____DOLLARS AND _____CENTS	
623C 000	COMBINATION CURB AND GUTTER (INCL. SAW CUTTING)	30	LF		_____DOLLARS AND _____CENTS	

ADDENDUM NO. 1

ITEM NO.	DESCRIPTION	QTY	UNIT	UNIT PRICE	UNIT PRICE (WRITTEN IN WORDS)	CONTRACT PRICE
623A 000	CONCRETE GUTTER (ALL TYPES) (INCL. SAW CUTTING)	25	LF		_____DOLLARS AND _____CENTS	
623B 000	CONCRETE CURB (ALL TYPES) (INCL. SAW CUTTING)	50	LF		_____DOLLARS AND _____CENTS	
623C 000	COMBINATION CURB AND GUTTER (INCL. SAW CUTTING)	1	LF		_____DOLLARS AND _____CENTS	
623A 000	CONCRETE GUTTER (ALL TYPES) (INCL. SAW CUTTING)	1	LF		_____DOLLARS AND _____CENTS	
623B 000	CONCRETE CURB (ALL TYPES) (INCL. SAW CUTTING)	300	LF		_____DOLLARS AND _____CENTS	
623C 000	COMBINATION CURB AND GUTTER (INCL. SAW CUTTING)	30	LF		_____DOLLARS AND _____CENTS	
623A 000	CONCRETE GUTTER (ALL TYPES) (INCL. SAW CUTTING)	100	LF		_____DOLLARS AND _____CENTS	
623B 000	CONCRETE CURB (ALL TYPES) (INCL. SAW CUTTING)	100	LF		_____DOLLARS AND _____CENTS	
623C 000	COMBINATION CURB AND GUTTER (INCL. SAW CUTTING)	100	LF		_____DOLLARS AND _____CENTS	
623A 000	CONCRETE GUTTER (ALL TYPES) (INCL. SAW CUTTING)	50	LF		_____DOLLARS AND _____CENTS	
				TOTAL ADDITIVE BID		

ADDENDUM NO. 1

Proposal

Base Bid (Total of all items listed in Base Bid) 1,316,457.92

Additive Bid (Total of all items listed in Additive Bid) 115,691.44

Grand Total (All items listed in Base Bid + Additive Bid) 1,432,149.36

Grand Total Written in words One Million Four Hundred Thirty Two Thousand One Hundred Forty Nine Dollars and Thirty six cents

Number of working days to complete construction will be specified in each individual task order.

Signature of Bidder _____
(If a firm or individual)

Address of Bidder 3025 Dial St
Mobile, AL 36612

By Chris Brewer

Signature of Bidder C.S. _____
(If a Corporation)

By C.S. _____
President
Chris Brewer
Print

_____
Secretary
Carson Tortorich
Print

_____
Treasurer

_____
Print

Business Address 3025 Dial St Mobile, AL 36612

Business Address 3025 Dial St Mobile, AL 36612

Business Address _____

(Corporate Seal)

ATTEST: _____
Secretary

Name of State under the Laws of which the Corporation was chartered: Alabama

40677
State License Number

Corporate Seal

ATTACHMENT "A"

TASK ORDER FORM

TASK ORDER NUMBER:_____

2026 PUBLIC SERVICES STORM DRAINAGE REPAIR & MAINTENANCE

2026-2070-01SW

Contract No. _____

This Task Order is made this the ___ day of _____, 20__, by and between The City of Mobile ("City") and _____ ("Contractor") pursuant to the terms and conditions set forth in the Contract executed between the parties on the ___ day of _____, 20____, ("Agreement"), which incorporated this Task Order by reference.

1. The Engineer Project Number for this Task Order is 2026-2070-01SW. The Engineering Project Number shall be referenced in each invoice/estimate submitted by Contractor to City under this Task Order.

2. The work to be performed by Contractor, the Project Schedule, Deliverables, and the Compensation to be paid to Contractor for the performance of the work described under this Task Order is set forth in the executed Contract/Agreement that has been accepted by the City and incorporated herein by reference. A Scope of Services checklist and/or project plans may be included with this task if required.

3. The number of working days to complete this task order will be _____.

CITY	CONTRACTOR
_____	_____
Signature	Signature (SEAL)
_____	_____
Name (Printed or Typed)	Name (Printed or Typed)
_____	_____
Date	Date

ATTACHMENT "B"

CHANGE ORDER FORM

CHANGE ORDER:_____
2026 PUBLIC SERVICES STORM DRAINAGE REPAIR & MAINTENANCE

2026-2070-01SW

Contract No. _____
Change Order No. _____
Effective Date _____

In accordance with Article 7 of the Contract dated _____, 20____ ("Agreement") between the City of Mobile ("City") and _____("Contractor"), this Change Order modifies the Agreement as follows:

1. Change in Services: _____
_____
_____
_____
_____.

2. Change in time of Performance (attach schedule if appropriate):_____
_____.

3. Change in Contractor's Compensation (if applicable):_____
_____.

All other terms and conditions remain unchanged.

CITY	**CONTRACTOR**
_____	_____
Signature	Signature (SEAL)
_____	_____
Name (Printed or Typed)	Name (Printed or Typed)
_____	_____
Date	Date

ATTACHMENT "C"

SUBCONTRACTING PLAN
AND
DBE UTILIZATION REPORT

OFFICE OF SMALL BUSINESS DEVELOPMENT

CITY OF MOBILE

Subcontracting and Major Supplier Plan

Contact Office of Small Business Development for questions on completing this form.
Via email:Archnique.kidd@cityofmobile.org
251.208.7967

Bidders and Proposers – Please complete and submit these forms as required by your City of Mobile Bid or Proposal Specification.

If you are submitting a proposal in response to a Request for Qualifications, Request for Proposal, or other solicitation ("Solicitations") issued by the City of Mobile, the bid specification may require you to utilize disadvantaged business enterprise ("DBE") subcontractors and suppliers. If SBE participation is required, you must complete and submit these forms with your proposal. If required, failure to submit this form will render your bid non-responsive. NOTE: To satisfy participation requirements for a federally funded project, you must utilize SBEs certified through the Alabama Unified Certification Program.

If SBE participation is required, and you fail to satisfy the participation requirement, you must show that you made a good faith effort to include such participation; you will be required to submit DBE Compliance Form 2 and include additional information if needed. When so required, failure to address adequately the good faith effort factors on Form 2 will render your bid or proposal non-responsive. The "good faith effort" factors on Form 2 are not intended to be a mandatory, exhaustive, or exclusive.

You are encouraged to work with the City of Mobile Small Business Development Manager when preparing this form. Please consult with the City Small Business Development Manager for a list of eligible SBEs. The "good faith effort" factors on **Form 2** are not intended to be mandatory, exhaustive, or exclusive; they are a tool to help you, and the City of Mobile, determine whether you made efforts which, by their scope, intensity, and appropriateness to the objective, would reasonably be expected to fulfill the participation requirement.

About "**DBEs**": Disadvantaged business enterprise or DBE means a for-profit small business concern (1) That is at least 51 percent owned by one or more individuals who are both socially and economically disadvantaged or, in the case of a corporation, in which 51 percent of the stock is owned by one or more such individuals; and (2) whose management and daily business operations are controlled by one or more of the socially and economically disadvantaged individuals who own it.

About "**Good Faith" Effort**: Good faith efforts mean efforts to achieve a DBE goal or other requirement of this part which, by their scope, intensity, and appropriateness to the objective, can reasonably be expected to fulfill the program requirement. The City of Mobile expects contractors holding large contracts to recruit and engage DBEs to be a part of their team.

Failure to submit this form, when so required by the bid or proposal specification, will render your bid non-responsive.

OFFICE OF SMALL BUSINESS DEVELOPMENT

CITY OF MOBILE

Subcontracting and Major Supplier Plan

Contact Office of Small Business Development for questions on completing this form.
Via email:Archnique.kidd@cityofmobile.org
251.208.7967

FORM 1: Background and Plan

Section I. Information about your company

Company	Chris Brewer Contracting, Inc.
Address	3025 Dial St Mobile, AL 36612
Telephone	251-456-7270
E-Mail	accounting@chrisbrewercontracting.com

RFP/RFQ Solicitation Number	2026-2070-01SW
Project Description	2026 Public Services Storm Drainage Repair and Maintenance
Is your company a DBE company?	Yes ☐ No ☑
Work force demographics	Male 32 Female 1 Minority 18 Non-minority _____ SDVO _____ Total number of Employees 33

Subcontractor/Major Supplier Plan submitted by:

Printed Name: Carson Tortorich

Signature: _____ Date: 6/9/26

Title: Project Manager

The following employee will be designated as the DBE **Liaison** for all communication regarding DBE participation including documentation for DBE participation and maintenance of records of Good Faith Efforts for this contract award:

Name: Carson Tortorich Title: Project Manager

Email: Carson@chrisbrewercontracting.com Phone: 251-421-6103

OFFICE OF SMALL BUSINESS DEVELOPMENT

CITY OF MOBILE

Subcontracting and Major Supplier Plan

Contact Office of Small Business Development for questions on completing this form.
Via email:Archnique.kidd@cityofmobile.org
251.208.7967

FORM 1: Background and Plan (Cont'd

Section II. Subcontractors/Major Vendors Supplier Plan submitted by:

Please Print Company Chris Brewer Contracting, Inc. Your Bid/Proposal Amount $ 1,432,149.36 Date: 6/9/26

Description COM Drainage Repairs Name of Bidder/Proposer: Chris Brewer

I intend to use the following subcontractors: (Attach additional pages if necessary)

Subcontractor or Major Supplier	Phone	Scope(s) of Work to be performed by the DBE, SDVOB	$$ Value of Proposed Contract with DBE	% of TOTAL Contract	DBE?	Official Verification Only
Evans and Company	800-832-4524	Erosion Control / Pipe	110,000	7.7	Yes	
[redacted]	[redacted]	[redacted]				
L&L Industries	251-300-8087	Concrete	150,000	10.47	Yes	

OFFICE OF SMALL BUSINESS DEVELOPMENT

CITY OF MOBILE

Subcontracting and Major Supplier Plan

Form 2: Good Faith Effort Documentation

Name of Bidder: Chris Brewer Contracting, Inc.

Contact Person: Carson Tortorich Phone: 251-421-6103 Email: carson@chrisbrewercontracting.com

Please complete this form if you are unable to identify DBE subcontractors or suppliers to reach 15% of the value of your bid.

YES (☐)	NO (☐)	Did you do these suggested areas for DBE recruitment and engagement
✓		**PRE-BID MEETING(S):** The bidder attended all pre-bid meetings scheduled by the City to inform DBEs of contracting and subcontracting opportunities.
✓		**DBE/ALDOT DBE LIST(S):** The bidder utilized the Office of Small Business Development list or lists of certified through the Alabama Department of Transportation UCP DBE Listing
✓		**SMALL CONTRACT(S):** The bidder selected specific portions of the work to be performed by DBEs in order to increase the likelihood of meeting the DBE goals (including breaking down contracts into smaller units to facilitate DBE participation). Consider support services, including insurance, accounting, temporary labor, and transportation, landscaping, and janitorial as potential areas for DBE use.
✓		**FOLLOW-UP:** The bidder followed-up initial indications of interest by DBEs by contacting those DBEs to determine with certainty if they remained interested in bidding.
✓		**GOOD FAITH NEGOTIATIONS:** The bidder negotiated in good faith with interested DBEs and did not reject DBEs as unqualified without sound business reasons based on a thorough investigation of their capabilities. Bidders are not expected to engage unqualified subcontractors or subcontradors whose pricing, after negotiation, remains excessive or unreasonable. (Please document qualification deficiencies or unreasonable pricing if it prevented your engagement of specific DBE subcontractors.)
✓		**ADVERTISEMENT:** The bidder advertised in general circulation and/or trade association publications concerning subcontracting opportunities and allowed DBEs reasonable time to respond.
✓		**INTERNET ADVERTISING:** The bidder advertised DBE and/or subcontracting opportunities in the newspaper or other internet portals that are accessible to DBEs and/or potential subcontractors.

✓		**INFORMATION:** The bidder provided interested DBEs with adequate information about the plans, specifications and requirements of the subcontract.
✓		**WRITTEN NOTICE(S):** The bidder/proposer took the necessary steps to provide written notice in a manner reasonably calculated to inform DBEs of subcontracting opportunities and allowed sufficient time for them to participate effectively.
✓		**COMMUNITY RESOURCES:** The bidder/proposer used the services of available community organizations, small and/or disadvantaged business assistance offices and other organizations that provided assistance in the recruitment and placement of DBE firms.

CONTRACT RECORDS:
The bidder/proposer has maintained the following records for each DBE that has bid on the subcontracting opportunity:
1. Name, address, email address and telephone number
2. A description of information provided by the bidder/proposer or subcontractor; and
3. A statement of whether an agreement was reached, and if not, why not, including any reasons for concluding that the DBE was unqualified to perform the job.

Section 2(B)

_____ There are not ways to break out 15% of the value of this contract for subcontractors / suppliers. Provide further details as to why and attach the document to this form if there is an inability to break out 15% of the value of the contract was the reason, or a reason, you could not meet the participation requirements.

_____ Could not find sufficient DBEs to provide subcontracting or supplier services.

_____ DBEs were available but did not have sufficient qualifications or experience to meet the needs of this contract.

Please indicate additional efforts you have taken to recruit and engage DBEs. _____

_____

_____

OFFICE OF SMALL BUSINESS DEVELOPMENT

CITY OF MOBILE

Compliance Form

DBE UTILIZATION REPORT

Return to Office Small Business Development

Via email at archnique.kidd@cityofmobile.org
P.O. Box 1948
Mobile, AL 36633

CONTRACTOR:	Certified DBE: YES NO	
DESCRIPTION:		Estimated Completion Date:

This report is for the month of: (CHECK ONE):

JAN APR JULY OCT
FEB MAY AUG NOV FINAL _____
MARCH JUNE SEPT DEC

Original Contract Amount	Total Amount of Contract Changes (change orders or amendments)	Final Contract Amount (include contract changes)	Payments to Date from City of Mobile	OFFICE USE ONLY (Verification)
$	$	$	$	

Instructions: List all DBEs utilized on the contract, whether or not the firms were originally listed for DBE goal credit. List actual amount paid to each DBE firm. If the established Percentage is not being met, please include a narrative description of the progress being made in DBE participation.

DBE SUBCONTRACTOR	DBE DESCRIPTION OF WORK	DBE SUBCONTRACT AMOUNT	DBE PAYMENTS THIS REPORT	PAYMENTS TO DATE	OFFICE USE ONLY (Verification)
		$	$	$	
		$	$	$	
		$	$	$	
		$	$	$	
TOTALS		$	$	$	

I HEREBY CERTIFY THAT THE INFORMATION CONTAINED HEREIN IS TRUE AND CORRECT. SUPPORTING DOCUMENTATION IS ON FILE AND IS AVAILABLE FOR INSPECTION BY CITY OF MOBILE OFFICE OF SUPPLIER DIVERSITY PERSONNEL AT ANY TIME.

PRINT NAME: _____

SIGNATURE: _____ _____ ___/___/___
(Title) (Date)

ATTACHMENT "D"

PROJECT CLOSEOUT REQUIREMENTS & AFFIDAVITS

CONSENT OF SURETY COMPANY TO FINAL PAYMENT

STATE OF: ALABAMA COUNTY OF: MOBILE

CITY OF MOBILE
CITY PROJECT NO. 2026-2070-01SW
2026 PUBLIC SERVICES STORM DRAINAGE REPAIR & MAINTENANCE

OWNER: CITY OF MOBILE, ALABAMA

CONTRACTOR: _____ SURETY: _____

_____ _____

In accordance with the provisions of the Contract between the Owner and the Contractor listed above,

the Surety Company, _____

on bond of Contractor, _____

hereby approved the final payment to the Contractor, and agrees that the final payment to the Contractor shall not relieve the Surety Company of any of its obligations to Owner, _____ THE CITY OF MOBILE, ALABAMA.

IN WITNESS WHEREOF, the Surety Company has hereinto set its hand and seal this

_____ day of _____, 20_____.

_____
Surety Company

_____ _____
Witness Signature of Authorized Agent

_____ Title _____

CONTRACTOR'S AFFIDAVIT OF PAYMENT OF CLAIMS & DEBTS

PROJECT: CITY OF MOBILE
CITY PROJECT NO. **2026-2070-01SW**
2026 PUBLIC SERVICES STORM DRAINAGE REPAIR & MAINTENANCE

OWNER: CITY OF MOBILE, ALABAMA

CONTRACTOR: _____

State of:_____
County of:_____

The undersigned hereby certifies that, except as listed below, he has paid in full or otherwise satisfied all obligations for all materials and equipment furnished, for all work, labor and services performed, and for all known indebtedness and claims against the Contractor for damages arising in any manner in connection with the performance of the contract referenced above for which the owner or his property might in any way be held responsible.

EXCETION: (If none, write none)_____
_____
_____
_____
_____

Contractor:_____

_____

Subscribed and sworn to before me this

_____day of _____, 20___.

By:_____

Title:_____

Notary Public:_____

My Commission Expires:_____

CITY OF MOBILE

CONTRACTOR'S CLOSEOUT REQUIREMENTS

The Contractor shall execute the following requirements as follows:

1. The Contractor must publicly advertise the Notice of Completion a minimum of once a week for four consecutive weeks and submit proof of advertising publication, original form with notary seal, as required by Section 39-2-12 of the 1975 Code of Alabama.
2. The Contractor must execute copies of Contractor's Affidavit of Payment of Claims and Debts.
3. The Contractor must have his/her surety execute copies of Consent of Surety to Final Payment.
4. The Contractor must furnish a letter on his letterhead acknowledging that acceptance of final payment by the Contractor constitutes a waiver of all claims, present or future, in connection with this project.
5. The Contractor must ensure that a written guarantee on his letterhead covering all defects in material and workmanship for each Task Order has been submitted. Each guarantee must be for a period of one (1) year commencing on the date that final payment was made for each Task Order.
6. The Contractor must provide a Maintenance Agreement for the grassing for each Task Order. Each guarantee must be for a period of one (1) year commencing on the date that final payment was made for each Task Order.
7. The Contractor must provide a City of Mobile DBE Utilization Report summarizing DBE participation to include the name of the DBE firm, address, telephone number and amount paid. If there was no DBE participation in the project, this report must summarize the reasons why and document any attempts made to secure DBE participation.

Without the successful completion of these documents, the Contractor may be added to a list of irresponsible bidders.

All the above requirements must be satisfied by the Contractor before final payment can be made.

ATTACHMENT "E"

CONTRACTORS INSURANCE CERTIFICTIONS

CERTIFICATE OF LIABILITY INSURANCE

DATE (MM/DD/YYYY): 6/9/2026

THIS CERTIFICATE IS ISSUED AS A MATTER OF INFORMATION ONLY AND CONFERS NO RIGHTS UPON THE CERTIFICATE HOLDER. THIS CERTIFICATE DOES NOT AFFIRMATIVELY OR NEGATIVELY AMEND, EXTEND OR ALTER THE COVERAGE AFFORDED BY THE POLICIES BELOW. THIS CERTIFICATE OF INSURANCE DOES NOT CONSTITUTE A CONTRACT BETWEEN THE ISSUING INSURER(S), AUTHORIZED REPRESENTATIVE OR PRODUCER, AND THE CERTIFICATE HOLDER.

IMPORTANT: If the certificate holder is an ADDITIONAL INSURED, the policy(ies) must have ADDITIONAL INSURED provisions or be endorsed. If SUBROGATION IS WAIVED, subject to the terms and conditions of the policy, certain policies may require an endorsement. A statement on this certificate does not confer rights to the certificate holder in lieu of such endorsement(s).

PRODUCER
Palomar Insurance Corporation
PO Box 240849
Montgomery AL 36124-0849

License#: 79316

CONTACT NAME: Luke Skipper
PHONE (A/C, No, Ext): (205) 263-5111
FAX (A/C, No):
E-MAIL ADDRESS: Lukes@palomarins.com

INSURER(S) AFFORDING COVERAGE	NAIC #
INSURER A : AlaCOMP	
INSURER B : Pennsylvania National Mutual Casualty Insurance Co	14990
INSURER C : Penn National Security Insurance Company	32441
INSURER D : Midwest Employers Casualty Company	23612
INSURER E :	
INSURER F :	

INSURED
Chris Brewer Contracting Inc.
PO Box 70211
Mobile AL 36607

CHRIBRE-01

COVERAGES **CERTIFICATE NUMBER:** 1960132593 **REVISION NUMBER:**

THIS IS TO CERTIFY THAT THE POLICIES OF INSURANCE LISTED BELOW HAVE BEEN ISSUED TO THE INSURED NAMED ABOVE FOR THE POLICY PERIOD INDICATED. NOTWITHSTANDING ANY REQUIREMENT, TERM OR CONDITION OF ANY CONTRACT OR OTHER DOCUMENT WITH RESPECT TO WHICH THIS CERTIFICATE MAY BE ISSUED OR MAY PERTAIN, THE INSURANCE AFFORDED BY THE POLICIES DESCRIBED HEREIN IS SUBJECT TO ALL THE TERMS, EXCLUSIONS AND CONDITIONS OF SUCH POLICIES. LIMITS SHOWN MAY HAVE BEEN REDUCED BY PAID CLAIMS.

INSR LTR	TYPE OF INSURANCE	ADDL INSD	SUBR WVD	POLICY NUMBER	POLICY EFF (MM/DD/YYYY)	POLICY EXP (MM/DD/YYYY)	LIMITS	
C	X **COMMERCIAL GENERAL LIABILITY** CLAIMS-MADE [X] OCCUR X Contr. Liab $1m GEN'L AGGREGATE LIMIT APPLIES PER: POLICY [X] PRO-JECT [ ] LOC OTHER:	Y	Y	GY92014239	2/15/2026	2/15/2027	EACH OCCURRENCE DAMAGE TO RENTED PREMISES (Ea occurrence) MED EXP (Any one person) PERSONAL & ADV INJURY GENERAL AGGREGATE PRODUCTS - COMP/OP AGG $	$ 1,000,000 $ 100,000 $ 5,000 $ 1,000,000 $ 2,000,000 $ 2,000,000 $
C	**AUTOMOBILE LIABILITY** X ANY AUTO OWNED AUTOS ONLY / SCHEDULED AUTOS X HIRED AUTOS ONLY / X NON-OWNED AUTOS ONLY	Y	Y	AX92014239	2/15/2026	2/15/2027	COMBINED SINGLE LIMIT (Ea accident) BODILY INJURY (Per person) BODILY INJURY (Per accident) PROPERTY DAMAGE (Per accident) $	$ 1,000,000 $ $ $ $
B	X **UMBRELLA LIAB** X OCCUR **EXCESS LIAB** CLAIMS-MADE DED RETENTION $	Y	Y	UL92014239	2/15/2026	2/15/2027	EACH OCCURRENCE AGGREGATE $	$ 5,000,000 $ 5,000,000 $
A D	**WORKERS COMPENSATION AND EMPLOYERS' LIABILITY** Y/N ANYPROPRIETOR/PARTNER/EXECUTIVE OFFICER/MEMBER EXCLUDED? [ ] N/A **(Mandatory in NH)** If yes, describe under DESCRIPTION OF OPERATIONS below		Y	WC-100-15491000-2026A PFAL155000	1/1/2026 1/1/2026	1/1/2027 1/1/2027	PER STATUTE / OTH-ER E.L. EACH ACCIDENT E.L. DISEASE - EA EMPLOYEE E.L. DISEASE - POLICY LIMIT	 $ 1,000,000 $ 1,000,000 $ 1,000,000

DESCRIPTION OF OPERATIONS / LOCATIONS / VEHICLES (ACORD 101, Additional Remarks Schedule, may be attached if more space is required)
PROJECT NAME: 2026 PUBLIC SERVICES STORM DRAINAGE REPAIR & MAITENANCE
PROJECT NUMBER: 2026-2070-01SW

City of Mobile is included as an Additional Insured in respect to all policies (except Workers Compensation and Professional Liability when applicable), which coverage shall be Primary and Non-contributory. Waiver of Subrogation applies in favor of City of Mobile with respect to all policies. Thirty(30) Day Notice of Cancellation, non-renewal or material change shall apply (except 10 days for non-payment).

CERTIFICATE HOLDER

City of Mobile
P.O Box 1827
Mobile AL 36633

CANCELLATION

SHOULD ANY OF THE ABOVE DESCRIBED POLICIES BE CANCELLED BEFORE THE EXPIRATION DATE THEREOF, NOTICE WILL BE DELIVERED IN ACCORDANCE WITH THE POLICY PROVISIONS.

AUTHORIZED REPRESENTATIVE

© 1988-2015 ACORD CORPORATION. All rights reserved.

ATTACHMENT "F"

E-VERIFY AFFIDAVIT, E-VERIFY REGISTRATION PRINTOUT, AND SECRETARY OF STATE RECORD

E-Verify

E-VERIFY IS A SERVICE OF DHS AND SSA

Company ID Number: 469012

THE E-VERIFY MEMORANDUM OF UNDERSTANDING FOR E-VERIFY EMPLOYER AGENTS

ARTICLE I
PURPOSE AND AUTHORITY

The parties to this agreement are the Department of Homeland Security (DHS) and EMPLOYERS ADMINISTRATIVE SERVICES INC (E-Verify Employer Agent). The purpose of this agreement is to set forth terms and conditions which the E-Verify Employer Agent will follow while participating in E-Verify.

E-Verify is a program that electronically confirms an employee's eligibility to work in the United States after completion of Form I-9, Employment Eligibility Verification (Form I-9). This Memorandum of Understanding (MOU) explains certain features of the E-Verify program and describes specific responsibilities of the E-Verify Employer Agent, the Employer, DHS, and the Social Security Administration (SSA).

The Employer is not a party to this MOU; however, this MOU contains a section titled Responsibilities of the Employer. This section is provided to inform E-Verify Employer Agents acting on behalf of the Employer of the responsibilities and obligations their clients are required to meet. The Employer is bound by these responsibilities through signing a separate MOU during their enrollment as a client of the E-Verify Employer Agent. The E-Verify program requires an initial agreement between DHS and the E-Verify Employer Agent as part of the enrollment process. After agreeing to the MOU as set forth herein, completing the tutorial, and obtaining access to E-Verify as an E-Verify Employer Agent, the E-Verify Employer Agent will be given an opportunity to add a client once logged into E-Verify. All parties, including the Employer, will then be required to sign and submit a separate MOU to E-Verify. The responsibilities of the parties remain the same in each MOU.

Authority for the E-Verify program is found in Title IV, Subtitle A, of the Illegal Immigration Reform and Immigrant Responsibility Act of 1996 (IIRIRA), Pub. L. 104-208, 110 Stat. 3009, as amended (8 U.S.C. § 1324a note). The Federal Acquisition Regulation (FAR) Subpart 22.18, "Employment Eligibility Verification" and Executive Order 12989, as amended, provide authority for Federal contractors and subcontractors (Federal contractor) to use E-Verify to verify the employment eligibility of certain employees working on Federal contracts.

ARTICLE II
RESPONSIBILITIES

A. RESPONSIBILITIES OF E-VERIFY EMPLOYER AGENT

1. The E-Verify Employer Agent agrees to provide to the SSA and DHS the names, titles, addresses, and telephone numbers of the E-Verify Employer Agent representatives who will be accessing information under E-Verify and shall update them as needed to keep them current.

2. The E-Verify Employer Agent agrees to become familiar with and comply with the E-Verify User Manual and provide a copy of the most current version of the E-Verify User Manual to the Employer so that the Employer can become familiar with and comply with E-Verify policy and procedures. The E-Verify Employer Agent agrees to obtain a revised E-Verify User Manual as it becomes available and to provide a copy of the revised version to the Employer no later than 30 days after the manual becomes available.

3. The E-Verify Employer Agent agrees that any person accessing E-Verify on its behalf is trained on the most recent E-Verify policy and procedures.

4. The E-Verify Employer Agent agrees that any E-Verify Employer Agent Representative who will perform employment verification cases will complete the E-Verify Tutorial before that individual initiates any cases.

   a. The E-Verify Employer Agent agrees that all E-Verify Employer Agent representatives will take the refresher tutorials initiated by the E-Verify program as a condition of continued use of E-Verify, including any tutorials for Federal contractors, if any of the Employers represented by the E-Verify Employer Agent is a Federal contractor.

   b. Failure to complete a refresher tutorial will prevent the E-Verify Employer Agent and Employer from continued use of E-Verify.

5. The E-Verify Employer Agent agrees to grant E-Verify access only to current employees who need E-Verify access. The E-Verify Employer Agent must promptly terminate an employee's E-Verify access if the employee is separated from the company or no longer needs access to E-Verify.

6. The E-Verify Employer Agent agrees to obtain the necessary equipment to use E- Verify as required by the E-Verify rules and regulations as modified from time to time.

7. The E-Verify Employer Agent agrees to, consistent with applicable laws, regulations, and policies, commit sufficient personnel and resources to meet the requirements of this MOU.

8. The E-Verify Employer Agent agrees to provide its clients with training on E-Verify processes, policies, and procedures. The E-Verify Employer Agent also agrees to provide its clients with ongoing E-Verify training as needed. E-Verify is not responsible for providing training to clients of E-Verify Employer Agents.

9. The E-Verify Employer Agent agrees to provide the Employer with the notices described in Article II.B.1 below.

10. The E-Verify Employer Agent agrees to create E-Verify cases for the Employer it represents in accordance with the E-Verify Manual, the E-Verify Web-Based Tutorial and all other published E-Verify rules and procedures. The E-Verify Employer Agent will create E-Verify cases using information provided by the Employer and will immediately communicate the response back to the Employer. If E-Verify is temporarily unavailable, the three-day time period will be extended until it is again operational in order to accommodate the E-Verify Employer Agent's attempting, in good faith, to make inquiries on behalf of the Employer during the period of unavailability.

11. When the E-Verify Employer Agent receives notice from a client company that it has received a contract with the FAR clause, then the E-Verify Employer Agent must update the company's E-Verify profile within 30 days of the contract award date.

12. If data is transmitted between the E-Verify Employer Agent and its client, then the E-Verify Employer Agent agrees to protect personally identifiable information during transmission to and from the E-Verify Employer Agent.

13. The E-Verify Employer Agent agrees to notify DHS immediately in the event of a breach of personal information. Breaches are defined as loss of control or unauthorized access to E-Verify personal data. All suspected or confirmed breaches should be reported by calling 1-888-464-4218 or via email at E-Verify@uscis.dhs.gov. Please use "Privacy Incident – Password" in the subject line of your email when sending a breach report to E-Verify.

14. The E-Verify Employer Agent agrees to fully cooperate with DHS and SSA in their compliance monitoring and evaluation of E-Verify, including permitting DHS, SSA, their contractors and other agents, upon reasonable notice, to review Forms I-9, employment records, and all records pertaining to the E-Verify Employer Agent's use of E-Verify, and to interview it and its employees regarding the use of E-Verify, and to respond in a timely and accurate manner to DHS requests for information relating to their participation in E-Verify.

15. The E-Verify Employer Agent shall not make any false or unauthorized claims or references about its participation in E-Verify on its website, in advertising materials, or other media. The E-Verify Employer Agent shall not describe its services as federally-approved, federally-certified, or federally-recognized, or use language with a similar intent on its website or other materials provided to the public. Entering into this MOU does not mean that E-Verify endorses or authorizes your E-Verify Employer Agent services and any claim to that effect is false.

16. The E-Verify Employer Agent shall not state in its website or other public documents that any language used therein has been provided or approved by DHS, USCIS or the Verification Division, without first obtaining the prior written consent of DHS.

17. The E-Verify Employer Agent agrees that E-Verify trademarks and logos may be used only under license by DHS/USCIS (see M-795 (Web)) and, other than pursuant to the specific terms of such license, may not be used in any manner that might imply that the E-Verify Employer Agent's services, products, websites, or publications are sponsored by, endorsed by, licensed by, or affiliated with DHS, USCIS, or E-Verify.

18. The E-Verify Employer Agent understands that if it uses E-Verify procedures for any purpose other than as authorized by this MOU, the E-Verify Employer Agent may be subject to appropriate legal action and termination of its participation in E-Verify according to this MOU.

B. RESPONSIBILITIES OF THE EMPLOYER

The E-Verify Employer Agent shall ensure that the E-Verify Employer Agent and the Employers represented by the E-Verify Employer Agent carry out the following responsibilities. It is the E-Verify Employer Agent's responsibility to ensure that its clients are in compliance with all E-Verify policies and procedures.

1. The Employer agrees to display the following notices supplied by DHS in a prominent place that is clearly visible to prospective employees and all employees who are to be verified through the system:

   a. Notice of E-Verify Participation

   b. Notice of Right to Work

2. The Employer agrees to provide to the SSA and DHS the names, titles, addresses, and telephone numbers of the Employer representatives to be contacted about E-Verify. The Employer also agrees to keep such information current by providing updated information to SSA and DHS whenever the representatives' contact information changes.

3. The Employer shall become familiar with and comply with the most recent version of the E-Verify User Manual. The Employer will obtain the E-Verify User Manual from the E-Verify Employer Agent.

4. The Employer agrees to comply with current Form I-9 procedures, with two exceptions:

   a. If an employee presents a "List B" identity document, the Employer agrees to only accept "List B" documents that contain a photo. (List B documents identified in 8 C.F.R. § 274a.2(b)(1)(B)) can be presented during the Form I-9 process to establish identity.) If an employee objects to the photo requirement for religious reasons, the Employer should contact E-Verify at 1-888-464-4218.

   b. If an employee presents a DHS Form I-551 (Permanent Resident Card), Form I-766 (Employment Authorization Document), or U.S. Passport or Passport Card to complete Form I-9, the Employer agrees to make a photocopy of the document and to retain the photocopy with the employee's Form I-9. The Employer will use the photocopy to verify the photo and to assist DHS with its review of photo mismatches that employees contest. DHS may in the future designate other documents that activate the photo screening tool.

Note: Subject only to the exceptions noted previously in this paragraph, employees still retain the right to present any List A, or List B and List C, document(s) to complete the Form I-9.

5. The Employer agrees to record the case verification number on the employee's Form I-9 or to print the screen containing the case verification number and attach it to the employee's Form I-9.

6. The Employer agrees that, although it participates in E-Verify, the Employer has a responsibility to complete, retain, and make available for inspection Forms I-9 that relate to its employees, or from other requirements of applicable regulations or laws, including the obligation to comply with the antidiscrimination requirements of section 274B of the INA with respect to Form I-9 procedures.

   a. The following modified requirements are the only exceptions to an Employer's obligation to not employ unauthorized workers and comply with the anti-discrimination provision of the INA: (1) List B identity documents must have photos, as described in paragraph 4 above; (2) When an Employer confirms the identity and employment eligibility of newly hired employee using E-Verify procedures, the Employer establishes a rebuttable presumption that it has not violated section 274A(a)(1)(A) of the Immigration and Nationality Act (INA) with respect to the hiring of that employee; (3) If the Employer receives a final nonconfirmation for an employee, but continues to employ that person,

the Employer must notify DHS and the Employer is subject to a civil money penalty between $550 and $1,100 for each failure to notify DHS of continued employment following a final nonconfirmation; (4) If the Employer continues to employ an employee after receiving a final nonconfirmation, then the Employer is subject to a rebuttable presumption that it has knowingly employed an unauthorized alien in violation of section 274A(a)(1)(A); and (5) no E-Verify participant is civilly or criminally liable under any law for any action taken in good faith based on information provided through the E-Verify.

b. DHS reserves the right to conduct Form I-9 compliance inspections, as well as any other enforcement or compliance activity authorized by law, including site visits, to ensure proper use of E-Verify.

7. The Employer is strictly prohibited from creating an E-Verify case before the employee has been hired, meaning that a firm offer of employment was extended and accepted and Form I-9 was completed. The Employer agrees to create an E-Verify case for new employees within three Employer business days after each employee has been hired (after both Sections 1 and 2 of Form I-9 have been completed), and to complete as many steps of the E-Verify process as are necessary according to the E-Verify User Manual. If E-Verify is temporarily unavailable, the three-day time period will be extended until it is again operational in order to accommodate the Employer's attempting, in good faith, to make inquiries during the period of unavailability.

8. The Employer agrees not to use E-Verify for pre-employment screening of job applicants, in support of any unlawful employment practice, or for any other use that this MOU or the E-Verify User Manual does not authorize.

9. The Employer must use E-Verify (through its E-Verify Employer Agent) for all new employees. The Employer will not verify selectively and will not verify employees hired before the effective date of this MOU. Employers who are Federal contractors may qualify for exceptions to this requirement as described in Article II.B of this MOU.

10. The Employer agrees to follow appropriate procedures (see Article III below) regarding tentative nonconfirmations. The Employer must promptly notify employees in private of the finding and provide them with the notice and letter containing information specific to the employee's E-Verify case. The Employer agrees to provide both the English and the translated notice and letter for employees with limited English proficiency to employees. The Employer agrees to provide written referral instructions to employees and instruct affected employees to bring the English copy of the letter to the SSA. The Employer must allow employees to contest the finding, and not take adverse action against employees if they choose to contest the finding, while their case is still pending. Further, when employees contest a tentative nonconfirmation based upon a photo mismatch, the Employer must take additional steps
(see Article III.B below) to contact DHS with information necessary to resolve the challenge.

11. The Employer agrees not to take any adverse action against an employee based upon the employee's perceived employment eligibility status while SSA or DHS is processing the verification request unless the Employer obtains knowledge (as defined in 8 C.F.R. § 274a.1(l)) that the employee is not work authorized. The Employer understands that an initial inability of the SSA or DHS automated verification system to verify work authorization, a tentative nonconfirmation, a case in continuance
(indicating the need for additional time for the government to resolve a case), or the finding of a photo

mismatch, does not establish, and should not be interpreted as, evidence that the employee is not work authorized. In any of such cases, the employee must be provided a full and fair opportunity to contest the finding, and if he or she does so, the employee may not be terminated or suffer any adverse employment consequences based upon the employee's perceived employment eligibility status (including denying, reducing, or extending work hours, delaying or preventing training, requiring an employee to work in poorer conditions, withholding pay, refusing to assign the employee to a Federal contract or other assignment, or otherwise assuming that he or she is unauthorized to work) until and unless secondary verification by SSA or DHS has been completed and a final nonconfirmation has been issued. If the employee does not choose to contest a tentative nonconfirmation or a photo mismatch or if a secondary verification is completed and a final nonconfirmation is issued, then the Employer can find the employee is not work authorized and terminate the employee's employment. Employers or employees with questions about a final nonconfirmation may call E-Verify at 1-888-464-4218 (customer service) or 1-888-897-7781 (worker hotline).

12. The Employer agrees to comply with Title VII of the Civil Rights Act of 1964 and section 274B of the INA as applicable by not discriminating unlawfully against any individual in hiring, firing, employment eligibility verification, or recruitment or referral practices because of his or her national origin or citizenship status, or by committing discriminatory documentary practices. The Employer understands that such illegal practices can include selective verification or use of E-Verify except as provided in part D below, or discharging or refusing to hire employees because they appear or sound "foreign" or have received tentative nonconfirmations. The Employer further understands that any violation of the immigration-related unfair employment practices provisions in section 274B of the INA could subject the Employer to civil penalties, back pay awards, and other sanctions, and violations of Title VII could subject the Employer to back pay awards, compensatory and punitive damages. Violations of either section 274B of the INA or Title VII may also lead to the termination of its participation in E-Verify. If the Employer has any questions relating to the anti-discrimination provision, it should contact OSC at 1-800-255-8155 or 1-800-237-2515 (TDD).

13. The Employer agrees that it will use the information it receives from E-Verify (through its E-Verify Employer Agent) only to confirm the employment eligibility of employees as authorized by this MOU. The Employer agrees that it will safeguard this information, and means of access to it (such as PINS and passwords), to ensure that it is not used for any other purpose and as necessary to protect its confidentiality, including ensuring that it is not disseminated to any person other than employees of the Employer who are authorized to perform the Employer's responsibilities under this MOU, except for such dissemination as may be authorized in advance by SSA or DHS for legitimate purposes.

14. The Employer agrees to notify DHS immediately in the event of a breach of personal information. Breaches are defined as loss of control or unauthorized access to E-Verify personal data. All suspected or confirmed breaches should be reported by calling 1-888-464-4218 or via email at E-Verify@uscis.dhs.gov. Please use "Privacy Incident – Password" in the subject line of your email when sending a breach report to E-Verify.

15. The Employer acknowledges that the information it receives through the E-Verify Employer Agent from SSA is governed by the Privacy Act (5 U.S.C. § 552a(i)(1) and (3)) and the Social Security Act (42 U.S.C. 1306(a)). Any person who obtains this information under false pretenses or uses it for any purpose other than as provided for in this MOU may be subject to criminal penalties.

16. The Employer agrees to cooperate with DHS and SSA in their compliance monitoring and evaluation of E-Verify (whether directly or through their E-Verify Employer Agent), which includes permitting DHS, SSA, their contractors and other agents, upon reasonable notice, to review Forms I-9 and other employment records and to interview it and its employees regarding the Employer's use of E-Verify, and to respond in a prompt and accurate manner to DHS requests for information relating to their participation in E-Verify.

17. The Employer shall not make any false or unauthorized claims or references about its participation in E-Verify on its website, in advertising materials, or other media. The Employer shall not describe its services as federally-approved, federally-certified, or federally-recognized, or use language with a similar intent on its website or other materials provided to the public. Entering into this MOU does not mean that E-Verify endorses or authorizes your E-Verify services and any claim to that effect is false.

18. The Employer shall not state in its website or other public documents that any language used therein has been provided or approved by DHS, USCIS or the Verification Division, without first obtaining the prior written consent of DHS.

19. The Employer agrees that E-Verify trademarks and logos may be used only under license by DHS/USCIS (see M-795 (Web)) and, other than pursuant to the specific terms of such license, may not be used in any manner that might imply that the Employer's services, products, websites, or publications are sponsored by, endorsed by, licensed by, or affiliated with DHS, USCIS, or E-Verify.

20. The Employer understands that if it uses E-Verify procedures for any purpose other than as authorized by this MOU, the Employer may be subject to appropriate legal action and termination of its participation in E-Verify according to this MOU.

C. RESPONSIBILITIES OF FEDERAL CONTRACTORS

The E-Verify Employer Agent shall ensure that the E-Verify Employer Agent and the Employers represented by the E-Verify Employer Agent carry out the following responsibilities if the Employer is a federal contractor or becomes a Federal contractor. The E-Verify Employer Agent should instruct the client to keep the E-Verify Employer Agent informed about any changes or updates related to federal contracts. It is the E-Verify Employer Agent's responsibility to ensure that its clients are in compliance with all E-Verify policies and procedures.

1. If the Employer is a Federal contractor with the FAR E-Verify clause subject to the employment verification terms in Subpart 22.18 of the FAR, it will become familiar with and comply with the most current version of the E-Verify User Manual for Federal Contractors as well as the E-Verify Supplemental Guide for Federal Contractors.

2. In addition to the responsibilities of every employer outlined in this MOU, the Employer understands that if it is a Federal contractor subject to the employment verification terms in Subpart 22.18 of the FAR it must verify the employment eligibility of any "employee assigned to the contract" (as defined in FAR 22.1801). Once an employee has been verified through E-Verify by the Employer, the Employer may not reverify the employee through E-Verify.

   a. An Employer that is not enrolled in E-Verify as a Federal contractor at the time of a contract award must enroll as a Federal contractor in the E-Verify program within 30 calendar days of

contract award and, within 90 days of enrollment, begin to verify employment eligibility of new hires using E-Verify. The Employer must verify those employees who are working in the United States, whether or not they are assigned to the contract. Once the Employer begins verifying new hires, such verification of new hires must be initiated within three business days after the hire date. Once enrolled in E-Verify as a Federal contractor, the Employer must begin verification of employees assigned to the contract within 90 calendar days after the date of enrollment or within 30 days of an employee's assignment to the contract, whichever date is later.

b. Employers enrolled in E-Verify as a Federal contractor for 90 days or more at the time of a contract award must use E-Verify to begin verification of employment eligibility for new hires of the Employer who are working in the United States, whether or not assigned to the contract, within three business days after the date of hire. If the Employer is enrolled in E-Verify as a Federal contractor for 90 calendar days or less at the time of contract award, the Employer must, within 90 days of enrollment, begin to use E-Verify to initiate verification of new hires of the contractor who are working in the United States, whether or not assigned to the contract. Such verification of new hires must be initiated within three business days after the date of hire. An Employer enrolled as a Federal contractor in E-Verify must begin verification of each employee assigned to the contract within 90 calendar days after date of contract award or within 30 days after assignment to the contract, whichever is later.

c. Federal contractors that are institutions of higher education (as defined at 20 U.S.C. 1001(a)), state or local governments, governments of Federally recognized Indian tribes, or sureties performing under a takeover agreement entered into with a Federal agency under a performance bond may choose to only verify new and existing employees assigned to the Federal contract. Such Federal contractors may, however, elect to verify all new hires, and/or all existing employees hired after November 6, 1986. Employers in this category must begin verification of employees assigned to the contract within 90 calendar days after the date of enrollment or within 30 days of an employee's assignment to the contract, whichever date is later.

d. Upon enrollment, Employers who are Federal contractors may elect to verify employment eligibility of all existing employees working in the United States who were hired after November 6, 1986, instead of verifying only those employees assigned to a covered Federal contract. After enrollment, Employers must elect to verify existing staff following DHS procedures and begin E-Verify verification of all existing employees within 180 days after the election.

e. The Employer may use a previously completed Form I-9 as the basis for creating an E-Verify case for an employee assigned to a contract as long as:

i. That Form I-9 is complete (including the SSN) and complies with Article II.B.6,

ii. The employee's work authorization has not expired, and

iii. The Employer has reviewed the Form I-9 information either in person or in communications with the employee to ensure that the employee's Section 1, Form I-9 attestation has not changed (including, but not limited to, a lawful permanent resident alien having become a naturalized U.S. citizen).

f. The Employer shall complete a new Form I-9 consistent with Article II.A.6 or update the previous Form I-9 to provide the necessary information if:

i. The Employer cannot determine that Form I-9 complies with Article II.A.6,

ii. The employee's basis for work authorization as attested in Section 1 has expired or changed, or

iii. The Form I-9 contains no SSN or is otherwise incomplete.

Note: If Section 1 of the Form I-9 is otherwise valid and up-to-date and the form otherwise complies with Article II.C.5, but reflects documentation (such as a U.S. passport or Form I-551) that expired after completing Form I-9, the Employer shall not require the production of additional documentation, or use the photo screening tool described in Article II.A.5, subject to any additional or superseding instructions that may be provided on this subject in the E-Verify User Manual.

g. The Employer agrees not to require a second verification using E-Verify of any assigned employee who has previously been verified as a newly hired employee under this MOU or to authorize verification of any existing employee by any Employer that is not a Federal contractor based on this Article.

3. The Employer understands that if it is a Federal contractor, its compliance with this MOU is a performance requirement under the terms of the Federal contract or subcontract, and the Employer consents to the release of information relating to compliance with its verification responsibilities under this MOU to contracting officers or other officials authorized to review the Employer's compliance with Federal contracting requirements.

D. RESPONSIBILITIES OF SSA

1. SSA agrees to allow DHS to compare data provided by the Employer (through the E-Verify Employer Agent) against SSA's database. SSA sends DHS confirmation that the data sent either matches or does not match the information in SSA's database.

2. SSA agrees to safeguard the information the Employer provides (through the E-Verify Employer Agent) through E-Verify procedures. SSA also agrees to limit access to such information, as is appropriate by law, to individuals responsible for the verification of Social Security numbers or responsible for evaluation of E-Verify or such other persons or entities who may be authorized by SSA as governed by the Privacy Act (5 U.S.C. § 552a), the Social Security Act (42 U.S.C. 1306(a)), and SSA regulations (20 CFR Part 401).

3. SSA agrees to provide case results from its database within three Federal Government work days of the initial inquiry. E-Verify provides the information to the E-Verify Employer Agent.

4. SSA agrees to update SSA records as necessary if the employee who contests the SSA tentative nonconfirmation visits an SSA field office and provides the required evidence. If the employee visits an SSA field office within the eight Federal Government work days from the date of referral to SSA, SSA agrees to update SSA records, if appropriate, within the eight-day period unless SSA determines that more than eight days may be necessary. In such cases, SSA will provide additional instructions to the employee. If the employee does not visit SSA in the time allowed, E-Verify may provide a final nonconfirmation to the E-Verify Employer Agent.

Note: If an Employer experiences technical problems, or has a policy question, the employer should contact E-Verify at 1-888-464-4218.

E. RESPONSIBILITIES OF DHS

1. DHS agrees to provide the Employer with selected data from DHS databases to enable the Employer (through the E-Verify Employer Agent) to conduct, to the extent authorized by this MOU

   a. Automated verification checks on alien employees by electronic means, and

   b. Photo verification checks (when available) on employees.

2. DHS agrees to assist the E-Verify Employer Agent with operational problems associated with its participation in E-Verify. DHS agrees to provide the E-Verify Employer Agent names, titles, addresses, and telephone numbers of DHS representatives to be contacted during the E-Verify process.

3. DHS agrees to provide to the E-Verify Employer Agent with access to E-Verify training materials as well as an E-Verify User Manual that contain instructions on E-Verify policies, procedures, and requirements for both SSA and DHS, including restrictions on the use of E-Verify.

4. DHS agrees to train E-Verify Employer Agents on all important changes made to E-Verify through the use of mandatory refresher tutorials and updates to the E-Verify User Manual. Even without changes to E-Verify, DHS reserves the right to require E-Verify Employer Agents to take mandatory refresher tutorials.

5. DHS agrees to provide to the Employer (through the E-Verify Employer Agent) a notice, which indicates the Employer's participation in E-Verify. DHS also agrees to provide to the Employer anti-discrimination notices issued by the Office of Special Counsel for Immigration-Related Unfair Employment Practices (OSC), Civil Rights Division, U.S. Department of Justice.

6. DHS agrees to issue each of the E-Verify Employer Agent's E-Verify users a unique user identification number and password that permits them to log in to E-Verify.

7. DHS agrees to safeguard the information the Employer provides (through the E-Verify Employer Agent), and to limit access to such information to individuals responsible for the verification process, for evaluation of E-Verify, or to such other persons or entities as may be authorized by applicable law. Information will be used only to verify the accuracy of Social Security numbers and employment eligibility, to enforce the INA and Federal criminal laws, and to administer Federal contracting requirements.

8. DHS agrees to provide a means of automated verification that provides (in conjunction with SSA verification procedures) confirmation or tentative nonconfirmation of employees' employment eligibility within three Federal Government work days of the initial inquiry.

9. DHS agrees to provide a means of secondary verification (including updating DHS records) for employees who contest DHS tentative nonconfirmations and photo mismatch tentative nonconfirmations. This provides final confirmation or nonconfirmation of the employees' employment eligibility within 10 Federal Government work days of the date of referral to DHS, unless DHS determines that more than 10 days may be necessary. In such cases, DHS will provide additional verification instructions.

ARTICLE III
REFERRAL OF INDIVIDUALS TO SSA AND DHS

The E-Verify Employer Agent shall ensure that the E-Verify Employer Agent and the Employers represented by the E-Verify Employer Agent carry out the following responsibilities. It is the E-Verify Employer Agent's responsibility to ensure that its clients are in compliance with all E-Verify policies and procedures.

A. REFERRAL TO SSA

1. If the Employer receives a tentative nonconfirmation issued by SSA, the Employer must print the tentative nonconfirmation notice as directed by E-Verify. The Employer must promptly notify employees in private of the finding and provide them with the notice and letter containing information specific to the employee's E-Verify case. The Employer also agrees to provide both the English and the translated notice and letter for employees with limited English proficiency to employees. The Employer agrees to provide written referral instructions to employees and instruct affected employees to bring the English copy of the letter to the SSA. The Employer must allow employees to contest the finding, and not take adverse action against employees if they choose to contest the finding, while their case is still pending.

2. The Employer agrees to obtain the employee's response about whether he or she will contest the tentative nonconfirmation as soon as possible after the Employer receives the tentative nonconfirmation. Only the employee may determine whether he or she will contest the tentative nonconfirmation.

3. After a tentative nonconfirmation, the Employer will refer employees to SSA field offices only as directed by E-Verify. The Employer must record the case verification number, review the employee information submitted to E-Verify to identify any errors, and find out whether the employee contests the tentative nonconfirmation. The Employer will transmit the Social Security number, or any other corrected employee information that SSA requests, to SSA for verification again if this review indicates a need to do so.

4. The Employer will instruct the employee to visit an SSA office within eight Federal Government work days. SSA will electronically transmit the result of the referral to the Employer (through the E-Verify Employer Agent) within 10 Federal Government work days of the referral unless it determines that more than 10 days is necessary.

5. While waiting for case results, the Employer agrees to check the E-Verify system regularly for case updates.

6. The Employer agrees not to ask the employee to obtain a printout from the Social Security Administration number database (the Numident) or other written verification of the SSN from the SSA.

B. REFERRAL TO DHS

1. If the Employer receives a tentative nonconfirmation issued by DHS, the Employer must promptly notify employees in private of the finding and provide them with the notice and letter containing information specific to the employee's E-Verify case. The Employer also agrees to provide both the English and the translated notice and letter for employees with limited English proficiency to employees. The Employer must allow employees to contest the finding, and not take adverse action against employees if they choose to contest the finding, while their case is still pending.

2. The Employer agrees to obtain the employee's response about whether he or she will contest the tentative nonconfirmation as soon as possible after the Employer receives the tentative nonconfirmation. Only the employee may determine whether he or she will contest the tentative nonconfirmation.

3. The Employer agrees to refer individuals to DHS only when the employee chooses to contest a tentative nonconfirmation.

4. If the employee contests a tentative nonconfirmation issued by DHS, the Employer will instruct the employee to contact DHS through its toll-free hotline (as found on the referral letter) within eight Federal Government work days.

5. If the Employer finds a photo mismatch, the Employer must provide the photo mismatch tentative nonconfirmation notice and follow the instructions outlined in paragraph 1 of this section for tentative nonconfirmations, generally.

6. The Employer agrees that if an employee contests a tentative nonconfirmation based upon a photo mismatch, the Employer will send a copy of the employee's Form I-551, Form I-766, U.S. Passport, or passport card to DHS for review by:

   a. Scanning and uploading the document, or

   b. Sending a photocopy of the document by express mail (furnished and paid for by the employer).

7. The Employer understands that if it cannot determine whether there is a photo match/mismatch, the Employer must forward the employee's documentation to DHS as described in the preceding paragraph. The Employer agrees to resolve the case as specified by the DHS representative who will determine the photo match or mismatch.

8. DHS will electronically transmit the result of the referral to the Employer (though the E-Verify Employer Agent) within 10 Federal Government work days of the referral unless it determines that more than 10 days is necessary.

9. While waiting for case results, the Employer agrees to check the E-Verify system regularly for case updates.

ARTICLE IV
SERVICE PROVISIONS

A. NO SERVICE FEES

1. SSA and DHS will not charge the Employer or the E-Verify Employer Agent for verification services performed under this MOU. The E-Verify Employer Agent is responsible for providing equipment needed to make inquiries. To access E-Verify, an E-Verify Employer Agent will need a personal computer with Internet access.

ARTICLE V
MODIFICATION AND TERMINATION

A. MODIFICATION

1. This MOU is effective upon the signature of all parties and shall continue in effect for as long as the SSA and DHS operates the E-Verify program unless modified in writing by the mutual consent of all parties.

2. Any and all E-Verify system enhancements by DHS or SSA, including but not limited to E-Verify checking against additional data sources and instituting new verification policies or procedures, will be covered under this MOU and will not cause the need for a supplemental MOU that outlines these changes.

B. TERMINATION

1. The E-Verify Employer Agent may terminate this MOU and its participation in E-Verify at any time upon 30 days prior written notice to the other parties. In addition, any Employer represented by the E-Verify Employer Agent may voluntarily terminate its MOU upon giving DHS 30 days' written notice.

2. Notwithstanding Article V, part A of this MOU, DHS may terminate this MOU, and thereby the E-Verify Employer Agent's participation in E-Verify, with or without notice, at any time if deemed necessary because of the requirements of law or policy, or upon a determination by SSA or DHS that there has been a breach of system integrity or security by the E-Verify Employer Agent or the Employer, or a failure on the part of either party to comply with established E-Verify procedures and/or legal requirements. The Employer understands that if it is a Federal contractor, termination of this MOU by any party for any reason may negatively affect the performance of its contractual responsibilities. Similarly, the Employer understands that if it is in a state where E-Verify is mandatory, termination of this by any party MOU may negatively affect the Employer's business.

3. An E-Verify Employer Agent for an Employer that is a Federal contractor may terminate this MOU for that Employer when the Federal contract that requires its participation in E-Verify is terminated or completed. In such cases, the E-Verify Employer Agent must provide written notice to DHS. If the E-Verify Employer Agent fails to provide such notice, then that Employer will remain an E-Verify participant, will remain bound by the terms of this MOU that apply to non-Federal contractor participants, and will be required to use the E-Verify procedures to verify the employment eligibility of all newly hired employees.

4. The E-Verify Employer Agent agrees that E-Verify is not liable for any losses, financial or otherwise, if the E-Verify Employer Agent or the Employer is terminated from E-Verify.

ARTICLE VI
PARTIES

A. Some or all SSA and DHS responsibilities under this MOU may be performed by contractor(s), and SSA and DHS may adjust verification responsibilities between each other as necessary. By separate agreement with DHS, SSA has agreed to perform its responsibilities as described in this MOU.

B. Nothing in this MOU is intended, or should be construed, to create any right or benefit, substantive or procedural, enforceable at law by any third party against the United States, its agencies, officers, or employees, or against the E-Verify Employer Agent, its agents, officers, or employees.

C. The E-Verify Employer Agent may not assign, directly or indirectly, whether by operation of law, change of control or merger, all or any part of its rights or obligations under this MOU without the prior written consent of DHS, which consent shall not be unreasonably withheld or delayed. Any attempt to sub-license, assign, or transfer any of the rights, duties, or obligations herein is void.

D. Each party shall be solely responsible for defending any claim or action against it arising out of or related to E-Verify or this MOU, whether civil or criminal, and for any liability where from, including (but not limited to) any dispute between the Employer and any other person or entity regarding the applicability of Section 403(d) of IIRIRA to any action taken or allegedly taken by the Employer.

E. The E-Verify Employer Agent understands that its participation in E-Verify is not confidential information and may be disclosed as authorized or required by law and DHS or SSA policy, including but not limited to, Congressional oversight, E-Verify publicity and media inquiries, determinations of compliance with Federal contractual requirements, and responses to inquiries under the Freedom of Information Act (FOIA).

F. The individuals whose signatures appear below represent that they are authorized to enter into this MOU on behalf of the E-Verify Employer Agent and DHS respectively. The E-Verify Employer Agent understands that any inaccurate statement, representation, data or other information provided to DHS may subject the Employer or the E-Verify Employer Agent, as the case may be, its subcontractors, its employees, or its representatives to: (1) prosecution for false statements pursuant to 18 U.S.C. 1001 and/or; (2) immediate termination of its MOU and/or; (3) possible debarment or suspension.

G. The foregoing constitutes the full agreement on this subject between DHS and the E-Verify Employer Agent. If you have any questions, contact E-Verify at 1-888-464-4218.

E-Verify

E-VERIFY IS A SERVICE OF DHS AND SSA

Company ID Number: 469012

Approved by:

E-Verify Employer Agent Employer	
EMPLOYERS ADMINISTRATIVE SERVICES INC	
Name (Please Type or Print) AUDREY L DAY	**Title**
Signature Electronically Signed	**Date** 11/29/2011
Department of Homeland Security – Verification Division	
Name (Please Type or Print) USCIS Verification Division	**Title**
Signature Electronically Signed	**Date** 11/29/2011

E-Verify

Company ID Number: 469012

E-VERIFY IS A SERVICE OF DHS AND SSA

Information Required for the E-Verify Program Information relating to your Company:	
Company Name	EMPLOYERS ADMINISTRATIVE SERVICES INC
Company Facility Address	2700 DAUPHIN STREET MOBILE, AL 366064803
Company Alternate Address	
County or Parish	MOBILE
Employer Identification Number	631208586
North American Industry Classification Systems Code	541
Parent Company	
Number of Employees	1,000 to 2,499
Number of Sites Verified for	360 site(s)

E-Verify

E-VERIFY IS A SERVICE OF DHS AND SSA

Company ID Number: 469012

Are you verifying for more than 1 site? If yes, please provide the number of sites verified for in each State:

AL	200
AR	5
FL	5
GA	20
LA	50
MS	50
NC	5
SC	10
TN	5
TX	5
VA	5

E-Verify

Company ID Number: 469012

E-VERIFY IS A SERVICE OF DHS AND SSA

Information relating to the Program Administrator(s) for your Company on policy questions or operational problems:

Name	JANE M BRIGHAM
Phone Number	2514735848
Fax	2514711493
Email	dexeasi@aol.com

Company ID Number: 469012

This list represents the first 20 Program Administrators listed for this company.

STATE OF ALABAMA
COUNTY OF MOBILE

AFFIDAVIT OF VENDOR / CONTRACTOR

Before me, a Notary public, personally appeared Chris Brewer (affiant) who, being duly sworn says as follows:

President/CEO of Chris Brewer Contracting, Inc

As a condition for the award of a contract by the City of Mobile to a business entity or employer that employs one or more employees, I hereby attest that in my capacity as President for CBC, Inc. that said employer shall not knowingly employ, hire for employment, or continue to employ an unauthorized alien.

By signing this contract, the contracting parties affirm, for the duration of the agreement, that they will not violate Federal Immigration Law or knowingly employ, hire for employment, or continue to employ an unauthorized alien within the State of Alabama. Furthermore, a contracting party found to be in violation of this provision shall be deemed in breach of the agreement and shall be responsible for all damages resulting therefrom.

I further attest that said CBC, Inc. is enrolled in the E-Verify program. The Company ID Number in the E-Verify program is as follows: [redacted] 469012

C.S.

CEO of Chris Brewer Contracting, Inc. (CBC, Inc)

Sworn to and subscribed before me this the 9th day of June, 2026.

I certify that the affiant is known to me to be the identical party he or she claims to be.

Randall Hurd Carter
Signature and Seal of Notary Public

RANDALL HURD CARTER
NOTARY PUBLIC
ALABAMA STATE AT LARGE
COMM. EXP. 10/10/29

ATTACHMENT "G"

TAX EXEMPTION

REGULATORY REQUIREMENTS AND TAX EXEMPTIONS:

A. DESCRIPTION OF REQUIREMENTS

1. This project is being bid EXCLUDING TAXES and requires the Contractor to comply with applicable provides of the Section 40-9-14.1, Code of Alabama, 1975, as amended; applicable provisions of the Alabama Administrative Code; Alabama Department of Revenue Regulation 810-6-3-.77 and applicable requirements of the Alabama Department of Revenue (ADOR). The Contractor and the Owner will be required to apply for Certificates of Exemption with the ADOR which will handle administration of the Certificates. The Contractor shall account for the tax savings for Base Bid and Alternates on the revised proposal attached hereto, in addition to filings and reports required by the Alabama Department of Revenue during the course of the project.

2. Base bid and all Alternate Bids shall exclude state and local sales and use taxes charged to a contractor licensed by the State Licensing Board for General Contractors or subcontractor for the purchase of construction materials and supplies and other tangible personal property that becomes part of this project.

3. Forms required to be completed and submitted shall be those included in the Bid and Contract Documents; those required by the ADOR; and any others as required by the Owner.

4. The purchase of tools, equipment, and similar items, which do not become the Owner's property, are specifically excluded from these sales and use tax exemptions, and any additional exclusions as required by the ADOR's Rules and Regulations.

B. GENERAL PROCEDURES

1. The provisions of this section shall take precedence over applicable portions of the Contract and Bid Documents including, in part, "Instructions to Bidders," "General Conditions of the Contract" and "Supplementary Conditions"; unaltered provisions of those documents shall remain in effect.

2. The Contractor, subcontractors, and all material dealers are hereby made aware of the Intent of the Owner to reduce the cost of the Project by the purchase of property, materials, etc., in the manner described herein, and neither they nor the Contractor shall withhold their consent to this arrangement.

3. Any and all administrative costs incurred by Contractors and subcontractors administering the tax savings shall be considered to be included in the Base Bid Proposal and each Alternate for the Work. No additional amount shall be added to the Contract because of the service provided by the Contractor in the purchase of property, materials, etc., as described herein, or in reporting exempt purchases to the ADOR, or otherwise complying with the reporting requirements established by the ADOR.

4. The administration of the sales and use tax savings shall be administered as indicated herein and as otherwise required or directed by the ADOR. In the event of conflict, the requirements or directions of the ADOR shall govern.

5. The Contractor, notwithstanding this special purchase arrangement, shall select, describe, order, obtain approvals, submit samples, coordinate, process, prepare shop drawings, pursue, receive, inspect, store, protect, insure, guarantee, warrantee, provide, and otherwise be responsible for all materials and systems, the same as if this tax savings procedure were not implemented.

6. When necessary or required Purchase Orders shall be used for materials for Work on this project only.

7. The Contractor or subcontractor, as the case may be, shall be liable for any actual sales and use tax due; all assessments; and all civil penalties levied by the ADOR as a result of the failure to implement this procedure; the failure to properly report as required by the ADOR; or any unauthorized purchase or use of purchase orders.

8. The Contractor shall utilize the attached Accounting of Sales Tax Form in submitting its base bid and additive alternate bid.

ACCOUNTING OF SALES TAX FORM

To: City of Mobile **Date:** 6/9/26

Name of Project: 2026 PUBLIC SERVICES STORM DRAINAGE REPAIR & MAINTENANCE
Project Number: 2026-2070-01SW

SALES TAX ACCOUNTING
Pursuant to Act 2021-372, the Contractor accounts for the sales tax NOT included in the bid proposal form as follows:

		ESTIMATED SALES TAX AMOUNT
BASE BID ITEMS:	1,316,457.92	$ 39,493.74
ADDITIVE BID:	115,691.44	$ 3,470.74

Failure to provide an accounting of sales tax shall render the bid non-responsive. Other than determining responsiveness, sales tax accounting shall not affect the bid pricing nor be considered in the determination of the lowest responsible and responsive bidder.

Legal Name of Bidder Christopher Brewer
Mailing Address P.O. Box 70211 Mobile, AL 36607
***By (Legal Signature)** C.S. Brewer
*Name (type or print) Chris Brewer (Seal)
*Title President
Telephone Number 251-370-4600

ITEM I
INVITATION TO BID

Notice to Contractors:

Sealed proposals will be received by the City Clerk of the City of Mobile, Alabama, 205 Government Street, 9th Floor, South Tower, until 2:30 p.m. local time, June 10, 2026 and then publicly opened and read in the Atrium, 1st Floor, for constructing:

Project No:	2026-2070-01SW
Project:	2026 PUBLIC SERVICES STORM DRAINAGE REPAIR & MAINTENANCE
Project Description:	Repair of storm drainage structures, ditches, and related roadway items

Contract documents may be viewed at the office of the City of Mobile Public Services Administration (PSA) Department, 1900 Hurtel Street, Mobile, AL 36605 and may be obtained in electronic format by prime contractor bidders by contacting the PSA Dept. Office (dorothy.eldridge@cityofmobile.gov). If requested in advance, hard copies may be obtained by prime contractor bidders at the Pre-Bid conference upon payment of twenty-five dollars ($25.00). This deposit shall be refunded in full to each prime Contractor Bidder upon return of the documents in reusable condition within ten (10) days after Bid Opening. The cost of and return of additional sets of specifications shall be in accordance with Act 97-225, Public Works Contracts.

No Bid Packages will be issued to Contractors later than twenty-four (24) hours after the Pre-Bid Conference. No questions, whether orally or written, will be addressed after 12:00 p.m. on June 8, 2026.

A Mandatory Pre-Bid Conference will be held at the PSA Dept. Conference Room, 2nd Floor, 1900 Hurtel Street, Mobile, AL 36605 on Thursday, June 4, 2026 at 10:00 A.M. Significant items related to the proposed construction will be explained. Representative must be a principal or current employee of the contracting company at the time of the Pre-Bid Conference. ***Any contractor not represented at the Pre-Bid Conference will be disqualified from bidding on the project.*** **A single individual cannot represent more than one contracting company.**

No bid will be received and considered unless made out on the blank form or Proposal attached, and unless all papers attached hereto are returned with the bid and the Proposal sheet attached.

This project is being bid EXCLUDING TAXES and requires the Contractor to comply with applicable provisions of Section 11-2A-14.1, Code of Alabama, 1975, as amended; applicable provisions of the Alabama Administrative Code; and applicable requirements of the Alabama Department of Revenue (ADOR).

Each bid shall be accompanied by a check or bid bond for the sum of five percent (5%) of the amount bid (maximum amount of bond $10,000), made payable to the CITY, and certified by a reputable banking institution. These monies shall serve as assurance that within ten (10) days of notice of contract award contemplated in the Proposal, the successful bidder will enter into such contract and file a bond for the execution of same.

The performance bond required will be for the amount bid, and labor and material bond shall be one hundred percent (100%) of the amount of contract, and shall be made by a Surety Company acceptable to the City of Mobile and upon the forms of bonds appended hereto.

In default of the entering into of such contract and the execution of such bond, the certified check required to accompany such bid shall be forfeited to the City of Mobile, Alabama. These fees shall not be a penalty but damages for delays, or for the additional cost or expenses that the CITY may incur by reason of such default.

In addition, the Contractor must furnish to the City at the time of the signing of the Contract a certificate of insurance coverage as provided in the specification which will include comprehensive insurance, Contractor's Automobile Liability Insurance, Owner's Protective Liability Insurance, or a Comprehensive General and Public Liability policy naming the City of Mobile, its agents and employees as additionally insured, and where applicable, subcontractor's Public Liability and Property Damage Insurance. The right is reserved to reject any and/or all bids and to waive informalities and to furnish any item of material or work to change the amount of said Contract.

Liquidated damages for non-completion of the work within the time limit agreed upon will be assessed according to Section 108.11 of Alabama Department of Transportation Standard Specifications for Highway Construction 2018 Edition.

Bidders must be licensed Contractors in the State of Alabama pursuant to Sections 34-8-1 through 34-8-27 of the Code of Alabama of 1975 as amended, and shall indicate State License Number on outside of bid envelope. **Any contractor that desires to bid as a prime contractor must possess a Municipal & Utility (MU) Major Classification or a Highways & Streets (HS) Major Classification per Section 230-X-.27 of the State of Alabama Licensing Board for General Contractors Administrative Code.** The bidder must not be disqualified from bidding on ALDOT projects at the time of the Pre-Bid Conference.

The awarding of a contract will require the Contractor to pay the prevailing wage rates for this district that are applicable to the trades engaged in this project.

The City of Mobile reserves the right to reject any and all bids and waive informalities in the bidding.

Bids must be sealed and have the project name and number marked on the outside of the envelope. The envelope containing bids must be addressed as follows, and delivered to Ms. Lisa Lambert, City Clerk; City of Mobile, P. O. Box 1827, Mobile, Alabama 36633; "Bid for completion of **2026 PUBLIC SERVICES STORM DRAINAGE REPAIR & MAINTENANCE**, City of Mobile Project No. **2026-2070-01SW**, in the City of Mobile, Alabama".

PLEASE PUBLISH IN THE ISSUES MAY 13TH, 20TH, AND 27TH 2026.

ITEM II
INSTRUCTIONS TO BIDDERS

1. TYPE OF PROPOSAL:

The services to be performed by CONTRACTOR under this Agreement shall be set forth in individual task orders using the general format set forth in Attachment A ("Task Order"), attached hereto and incorporated herein by reference.

The OWNER reserves the right to issue an unlimited number of Task Orders pursuant to the Contract. Additionally, the Owner reserves the right to issue no Task Orders pursuant to the Contract.

UNIT PRICE BID – The Proposal for the work is to be submitted on a unit price basis. Unit price amounts shall be submitted on all items of work set forth in the Proposal. Estimates of quantities of each class of work to be performed are specified in the Proposal, and although stated with as much accuracy as possible, are approximate only, and are assumed solely for the basis of establishing the low bidder, upon which the award of contract shall be made. The BIDDER should not assume that he shall receive such quantity of work if awarded this contract. Payment to the CONTRACTOR will be made on the measurement of the work actually performed by the CONTRACTOR as specified in the Contract Documents.

2. PREPARATION OF BIDS:

Forms furnished, or copies thereof shall be used, and strict compliance with the requirements of the advertisement, these instructions, and the instructions printed on the forms is necessary. Special care shall be exercised in the preparation of Bids. Bidders must make their own estimates of the facilities and difficulties attending the performance of the proposed Contract, including local conditions, uncertainty of weather, and all other contingencies. All designations and prices shall be fully and clearly set forth. The proper spaces in the Bid and guaranty forms shall be suitably filled. A City of Mobile Subcontracting Plan must be submitted with the bid documents.

3. LABOR AND MATERIALS NOT TO BE FURNISHED BY CITY OF MOBILE, ALABAMA:

The City of Mobile, Alabama will not furnish any labor, materials or supplies unless specifically provided in the Contract.

4. SIGNATURE OF BIDDERS:

Each Bid must give the full business address of the Bidder and be signed by him with his usual signature. Bids by partnerships must furnish the full names of all partners and must be signed with the partnership name by one of the members of the partnership or by an authorized representative, followed by the signature and designation of the person signing. Bids by Corporations must be signed with the legal name of the corporation, followed by the name of State of Incorporation and by the signature of the president, secretary or other person authorized to bind it in the matter. The name of each person shall also be typed or printed below the signature. A Bid by a person who affixes to his signature the word "President," "Secretary," "Agent," or other designation without disclosing his principal may be held responsible for the

Bid. When requested by the City of Mobile, Alabama satisfactory evidence of the authority of the office signing on behalf of the corporation shall be furnished.

5. SPECIFICATIONS AND SCHEDULES:

The specifications, conditions, schedules and drawings that form the basis of any Bid will be considered as a part thereof and will form a part of the Contract. Copies of these papers, together with a copy of the standard Contract form, including authorized additions, or deletions, if any, will be furnished to or made available for the inspections of Bidders by the office indicated in the advertisement of invitation. The current specifications to be used for this project will be the **Alabama Department of Transportation Standard Specifications for Highway Construction, 2018 edition**, subject to any amendments set forth in the Special Provisions or the Supplemental Specifications.

6. CORRECTIONS:

Erasures or other changes in the Bids must be explained or noted over the signature of the Bidder.

7. OWNER:

Where the word "Owner" appears herein, the same refers to the City of Mobile, Alabama, and includes the Mayor acting through the City Council, its governing body.

8. GUARANTY AND INSURANCE:

Security is required to ensure the execution of the Contract and bond for performance of the services; no Bid will be considered unless it is so guaranteed. The Bidder must furnish with his Bid, a guaranty bond or certified check in the amount of five percent (5%) (maximum amount $10,000) of his Bid price payable to the City of Mobile, Alabama. Upon default of the Contract and the execution of such bond within ten (10) consecutive working days of written notice of award of the Contract, the Certified Check or Bid Bond required to accompany such Bid shall be forfeited to the City of Mobile, Alabama, not as a penalty but as liquidated damages for delays, or any additional cost or expenses which may be incurred by the CITY by reason of such default.

9. BONDS AND INSURANCE:

The bonds and insurance policies of any surety company or insurance company respectively, authorized to do business in the State of Alabama, will be accepted as security and insurance as required for any Bid or Contract. See the instructions hereinafter contained and the applicable standard forms with respect to the type, form, and the amounts of required bonds and insurance policies.

10. MARKING AND MAILING BIDS:

Bids, with their guaranty, must be securely sealed in suitable envelopes, addressed and marked on the outside "Bid for completion of **2026 PUBLIC SERVICES STORM DRAINAGE REPAIR & MAINTENANCE**, City of Mobile Project No. **2026-2070-01SW** , in the City of Mobile, Alabama".

11. TIME FOR RECEIVING BIDS:

Bids received prior to the time of opening will be securely stored, unopened. The Owner will decide when the specified time has arrived; no Bid will be considered if received thereafter. When a Bid arrives by mail after time for opening, but before award is made, and it is shown to

the Owner's satisfaction that the late arrival was due solely to mail delays, beyond the Bidder's responsibility, the Bid will be received and considered. Non-responsibility will be attached to the City of Mobile for the premature opening of a Bid not properly addressed and identified. Unless specifically authorized, telegraphic Bids will not be considered; however, modifications to previously submitted Bids will be considered if received prior to the hour set for opening.

12. WITHDRAWAL OF BIDS:
Bids may be withdrawn by written or telegraphic requests received from Bidders prior to the time fixed for opening. Negligence on the part of the Bidder in preparing the Bid confers no right for the withdrawal of Bid after it has been opened.

13. BIDDERS PRESENT:
At the time fixed for opening Bids, Bid contents will be made public for the information of Bidders and others properly interested, who may be present either in person or by representation.

14. AWARD OR REJECTION OF BIDS:
The Contract will be awarded to the lowest responsible Bidder, complying with the conditions of the Invitation for Bids, provided his Bid is reasonable and in the best interest of the Owner for acceptance. The Bidder to whom the award is made will be notified at the earliest possible date. The Owner, however, reserves the right to reject any and all Bids and to waive any informality in Bids received whenever such rejection or waiver is in the best interest of the Owner. The Owner also reserves the right to reject the Bidder who has previously failed to perform properly or complete projects on time; to complete Contracts of a similar nature; or a Bidder who is not, in the judgment of the Owner, in a position to perform the Contract.

15. PRE-QUALIFICATION OF BIDDERS:
The bidder must not be disqualified from bidding on ALDOT projects at the time of the Pre-Bid Conference. Any contractor that desires to bid as a prime contractor must possess a Municipal & Utility (MU) **Major Classification** or a Highways & Streets (HS) **Major Classification** per Section 230-X-.27 of the State of Alabama Licensing Board for General Contractors Administrative Code.

16. ISSUANCE OF PROPOSAL FORMS:
The Owner reserves the right to refuse to issue a proposal form to a prospective bidder, should such bidder be in default for any of the following reasons:

(a) Failure to comply with any pre-qualification regulations of the Owner, if such regulations are cited, or otherwise included, in the proposal as a requirement for bidding.
(b) Failure to pay, or satisfactorily settle, all bills due for labor and materials on former contracts in force (with the owner) at the time the owner issues the proposal to the prospective bidder.
(c) Contractor default under previous contracts with the owner.
(d) Unsatisfactory work of any nature, or failure to meet schedule on previous contracts with the Owner.
(e) Uncompleted work or work behind schedule, which, in the opinion of the owner, might hinder or prevent prompt completion of this work.

(f) Lack of competent workmen and equipment to perform at least 50% of the required work with contractor's own forces and equipment.

17. BIDDERS INTERESTED IN MORE THAN ONE BID:

If more than one Bid is offered by any one party, by, or in the name of his clerk, partner, a corporation in which he has a substantial interest, in which he is an officer, or other person, all such Bids may be rejected. A party who has quoted prices on materials to a Bidder is not disqualified from quoting prices to other Bidders or from submitting a Bid directly for the materials or work. The City of Mobile reserves the right to determine, in its discretion, whether any Bidder has violated the provisions of this clause.

18. ERRORS IN BID:

Bidders or their authorized agents are expected to examine the maps, drawings, specifications and all other documents pertaining to the work, which will be open to their inspection. Failure to do so will be at the Bidder's own risk; the Bidder cannot secure relief on the plea of error in the Bid. In case of error in the extenuation of prices, the unit price will govern.

Should any Bidder observe any ambiguity, discrepancy, omission, or error in the Drawings or any Contract Document, or be in doubt as to the intention and meaning thereof, he should at once report such to the PSA-PM and request clarification, in writing, with a copy of his request to the City.

Clarification will be made only by written Addenda sent to all prospective bidders. Neither the PSA-PM nor the PSA Director will be responsible, in any manner, for verbal instructions made prior to the award of the Contract.

Should conflict occur in or between Drawings and Specifications, a Bidder will be deemed to have estimated on the more expensive way of doing the work involved; unless, prior to submission of the proposal, the bidder requested and obtained the PSA-PM's written decision indicating the preferred method, materials, or equipment.

19. CONTRACT AND BOND:

The Bidder to whom award is made, must, when requested, enter into Contract on the standard form as set out herein, with satisfactory security in the amount required, within the period specified, within ten (10) working days after the required forms are presented to him for signature.

20. COLLUSION:

If there is any reason for believing that collusion exists among the Bidders, any or all Proposals may be rejected, and those participating in such collusion may be barred from submitting Bids on the same or other work with the City.

21. SUBLETTING OR ASSIGNING OF CONTRACT:

(a) **Limitations:** The Contractor shall not sublet, assign, transfer, convey, sell or otherwise dispose of any portion of the Contract, his right, title or interest therein, or his power to execute such Contract, to any person, firm, or corporation without written consent of the

City; such consent shall not be construed to relieve the Contractor of any responsibility for the fulfillment of the Contract. Unless otherwise stipulated in the proposal or special provisions, the Contractor shall perform with his own organization, and with the assistance of workmen under his immediate supervision, and reported on his payroll, all Contract work of a value not less than fifty percent (50%) of the total Contract amount. Any items designated in the Contract as "Specialty Items," so performed by Subcontract may be deducted from the total Contract amount before computing the amount of work required to be performed by the Contractor with his own organization.

(b) **Subcontractor's Status:** A Subcontractor shall be recognized only in the capacity of an employee or agent of the Contractor. The Contractor will be responsible to the City for the entire Subcontractor's work, including failures or omissions. The PSA Director may require a Subcontractor's removal, as in the case of a Contractor's employee.

22. PROSECUTION OF WORK:

(a) **Notice of Intent:** The Contractor shall give the Public Services Administration Project Manager (PSA-PM) definite notice of his intention to start work on each Task Order at least seventy-two (72) hours in advance of beginning. Should the Contractor, with the consent of the PSA-PM, discontinue prosecution of the work, the Contractor shall give the PSA-PM at least forty-eight (48) hours notice in writing before resuming operations.

(b) **General:** The Contractor shall prosecute the work continuously and diligently in the order and manner set out in his schedule as approved by the PSA-PM. The Contractor shall provide sufficient material, labor, and equipment to ensure that the work will be completed in a satisfactory manner within the time specified in the Contract.

(c) Should the Contractor fail to maintain a satisfactory rate of progress, the PSA-PM will direct additional forces and equipment to work on the project to ensure the project continues on schedule and maintain satisfactory progress.

(d) Should the Contractor fail to furnish sufficient satisfactory equipment and labor for maintaining the quality and progress of the work, the PSA-PM may withhold all pay requests and estimates that are or may become due, until satisfactory quality and progress are maintained or the Contract may be annulled.

23. SCHEDULE OF CONSTRUCTION

(a) Once a Task Order has been issued to the CONTRACTOR, the CONTRACTOR will begin work on that Task Order within ten (10) calendar days.

ITEM III
PROPOSAL

TO: Honorable Mayor
City of Mobile
Mobile, Alabama

Date 6/10/26

The undersigned, as Bidder, hereby declares that he has examined the site of the work and is fully aware of conditions pertaining to the place where the work is to be done. The Bidder also declares that he has carefully examined the Instructions to Bidders, the General Conditions of the Specifications and the drawings, as prepared by the PSA-PM, as well as the premises.

Project Name: 2026 PUBLIC SERVICES STORM DRAINAGE REPAIR & MAINTENANCE
Project No: 2026-2070-01SW
Project Description: Repair of storm drainage structures, ditches, and related roadway items
Major work items include: Repair and maintenance of storm drainage pipes, inlets, inlet tops, paved and unpaved ditches, sediment removal and roadway repairs

The Bidder further agrees to construct the improvements in accordance with the Task Order issued for the specified work.

The Bidder proposes and accepts the Articles of Agreement with the City of Mobile, Mobile, Alabama to furnish all necessary materials, equipment, tools, machinery, and means of transportation, and labor to complete the construction of the project.

All work performed under this contract shall be in accordance with the State of Alabama Highway Department Standard Specifications for Highway Construction, 2018 Edition, with all latest additions and modifications by the Public Services Administration (PSA) Department for the City of Mobile, or as amended herein.

The quantities for bid items listed on the proposal sheets are estimated quantities. Payment to the Contractor will be made only for the actual quantities of work performed and accepted on materials furnished in accordance with the contract. The scheduled quantities of work to be done and materials to be furnished may each be increased, decreased or omitted as herein provided.

No interpretations of the meaning of the plans, specifications or other bid documents will be made to any bidder orally. Any request for such interpretation should be in writing, addressed to City of Mobile PSA Department, 1900 Hurtel Street, Mobile, AL 36605 (dorothy.eldridge@cityofmobile.gov). In order to receive consideration, the request must be received before 12:00 p.m. on June 8, 2026. Any such interpretation request and/or any supplemental instructions will be mailed, emailed, or delivered to all prospective bidders.

2026-2070-01SW

2026 PUBLIC SERVICES STORM DRAINAGE REPAIR & MAINTENANCE

BASE BID

ITEM NO.	DESCRIPTION	QTY	UNIT	UNIT PRICE	UNIT PRICE (WRITTEN IN WORDS)	CONTRACT PRICE
206C 000	REMOVING CONCRETE SIDEWALK (INCLUDING SAW CUTTING)	40	SY		_____ DOLLARS AND _____ CENTS	
206C 010	REMOVING CONCRETE DRIVEWAY (INCLUDING SAW CUTTING)	55	SY		_____ DOLLARS AND _____ CENTS	
206C 020	REMOVING ASPHALT PAVEMENT (INCLUDING SAW CUTTING)	45	SY		_____ DOLLARS AND _____ CENTS	
206D 003	REMOVING CONCRETE GUTTER AND/OR CURB (ALL TYPES) (INCLUDING SAW CUTTING)	100	LF		_____ DOLLARS AND _____ CENTS	
206D 005	REMOVING PIPE 24" OR LESS DIAMETER	100	LF		_____ DOLLARS AND _____ CENTS	
206D 006	REMOVING PIPE 27" -36" DIAMETER	100	LF		_____ DOLLARS AND _____ CENTS	
206D 007	REMOVING PIPE 42" -48" DIAMETER	50	LF		_____ DOLLARS AND _____ CENTS	
206D 008	REMOVING PIPE 54" -60" DIAMETER	50	LF		_____ DOLLARS AND _____ CENTS	
206E 000	REMOVING INLETS, PARTIAL TOP AND THROAT	10	EA		_____ DOLLARS AND _____ CENTS	

ITEM NO.	DESCRIPTION	QTY	UNIT	UNIT PRICE	UNIT PRICE (WRITTEN IN WORDS)	CONTRACT PRICE
206E 061	REMOVING TREE (8 - 18 INCH)	5	EA		_____ DOLLARS AND _____ CENTS	
206E 062	REMOVING TREE (19 - 36 INCH)	3	EA		_____ DOLLARS AND _____ CENTS	
206E 063	REMOVING TREE (37 INCH OR LARGER)	3	EA		_____ DOLLARS AND _____ CENTS	
210A 000	UNCLASSIFIED EXCAVATION (INCLUDING SAW CUTTING)	70	CY		_____ DOLLARS AND _____ CENTS	
210D 000	BORROW EXCAVATION (LOOSE TRUCKBED MEASUREMENT) (A-2 OR BETTER)	70	CY		_____ DOLLARS AND _____ CENTS	
214A 000	STRUCTURE EXCATION (0' TO 6' DEPTH)	30	CY		_____ DOLLARS AND _____ CENTS	
260A 000	FLOWABLE FILL	70	CY		_____ DOLLARS AND _____ CENTS	
301A 000	CRUSHED AGGREGATE BASE COURSE, TYPE B, PLANT MIXED, 6" COMPACTED THICKNESS	200	TON		_____ DOLLARS AND _____ CENTS	
305B 000	57 STONE	150	TON		_____ DOLLARS AND _____ CENTS	

ITEM NO.	DESCRIPTION	QTY	UNIT	UNIT PRICE	UNIT PRICE (WRITTEN IN WORDS)	CONTRACT PRICE
424A 002	SUPERPAVE BITUMINOUS CONCRETE WEARING SURFACE LAYER, PATCHING OR LEVELING, 1/2" MAXIMUM AGGREGATE SIZE MIX, ESAL RANGE C/D	100	TON		_____ DOLLARS AND _____ CENTS	
533A 001	15" STORM SEWER (CLASS 3 R.C.)	100	LF		_____ DOLLARS AND _____ CENTS	
533A 002	18" STORM SEWER (CLASS 3 R.C.)	100	LF		_____ DOLLARS AND _____ CENTS	
533A 003	24" STORM SEWER (CLASS 3 R.C.)	100	LF		_____ DOLLARS AND _____ CENTS	
533A 004	30" STORM SEWER (CLASS 3 R.C.)	100	LF		_____ DOLLARS AND _____ CENTS	
533A 005	36" STORM SEWER (CLASS 3 R.C.)	100	LF		_____ DOLLARS AND _____ CENTS	
533A 006	42" STORM SEWER (CLASS 3 R.C.)	80	LF		_____ DOLLARS AND _____ CENTS	
533A 007	48" STORM SEWER (CLASS 3 R.C.)	80	LF		_____ DOLLARS AND _____ CENTS	
533A 008	54" STORM SEWER (CLASS 3 R.C.)	48	LF		_____ DOLLARS AND _____ CENTS	
533A 009	60" STORM SEWER (CLASS 3 R.C.)	40	LF		_____ DOLLARS AND _____ CENTS	
539A 001	PIPELINE CLEANING - 12"-24"	1000	LF		_____ DOLLARS AND _____ CENTS	

ITEM NO.	DESCRIPTION	QTY	UNIT	UNIT PRICE	UNIT PRICE (WRITTEN IN WORDS)	CONTRACT PRICE
539A 002	PIPELINE CLEANING - 27"-36"	1000	LF		_____ DOLLARS AND _____ CENTS	
539A 003	PIPELINE CLEANING - 42"-48"	500	LF		_____ DOLLARS AND _____ CENTS	
539A 010	PIPELINE VIDEOING - 12"-24"	1000	LF		_____ DOLLARS AND _____ CENTS	
539A 020	PIPELINE VIDEOING - 27"-36"	1000	LF		_____ DOLLARS AND _____ CENTS	
539A 030	PIPELINE VIDEOING - 42"-48"	500	LF		_____ DOLLARS AND _____ CENTS	
539A 040	PIPELINE VIDEOING - 54"-60"	125	LF		_____ DOLLARS AND _____ CENTS	
610A 000	LOOSE RIP RAP, CLASS 1	10	TON		_____ DOLLARS AND _____ CENTS	
610A 001	LOOSE RIP RAP, CLASS 2	10	TON		_____ DOLLARS AND _____ CENTS	
610A 002	LOOSE RIP RAP, CLASS 3	10	TON		_____ DOLLARS AND _____ CENTS	
610D 000	FILTER BLANKET, GEOTEXTILE FILTER FABRIC (WOVEN TYPE)	100	SY		_____ DOLLARS AND _____ CENTS	
618A 000	CONCRETE SIDEWALK, 4" THICK (INCL. EXCAVATION) (WIDTH VARIES)	150	SY		_____ DOLLARS AND _____ CENTS	

ITEM NO.	DESCRIPTION	QTY	UNIT	UNIT PRICE	UNIT PRICE (WRITTEN IN WORDS)	CONTRACT PRICE
618A 001	CONCRETE SIDEWALK, 6" THICK (INCL. REINFORCEMENT AND EXCAVATION) (WIDTH VARIES)	25	SY		_____ DOLLARS AND _____ CENTS	
618A 002	PEA GRAVEL BEDDING, 4" THICK	25	SY		_____ DOLLARS AND _____ CENTS	
618A 003	CONCRETE SIDEWALK, 4" THICK WITH HEADER CURB ONE SIDE, 4" TO 6" MAX CURB HEIGHT (INCL. EXCAVATION) (WIDTH VARIES)	25	SY		_____ DOLLARS AND _____ CENTS	
618A 004	CONCRETE SIDEWALK, 4" THICK WITH HEADER CURB BOTH SIDES, 4" TO 6" CURB HEIGHT (INCL. EXCAVATION) (WIDTH VARIES)	25	SY		_____ DOLLARS AND _____ CENTS	
618A 005	CONCRETE SIDEWALK, 5" THICK (INCL. REINFORCEMENT AND EXCAVATION) (WIDTH VARIES)	50	SY		_____ DOLLARS AND _____ CENTS	
618B 000	CONCRETE DRIVEWAY (MATCH EXISTING)- INCLUDING REINFORCEMENT& SAW CUTTING	55	SY		_____ DOLLARS AND _____ CENTS	
618D 001	HANDICAP RAMP (ALL TYPES) (INCL EXCAVATION)	10	EA		_____ DOLLARS AND _____ CENTS	

ITEM NO.	DESCRIPTION	QTY	UNIT	UNIT PRICE	UNIT PRICE (WRITTEN IN WORDS)	CONTRACT PRICE
618E 001	TRUNCATED DOME INSERT, NEW CONSTRUCTION	10	EA		_____ DOLLARS AND _____ CENTS	
618E 002	MODIFIED TRUNCATED DOME INSERT, NEW CONSTRUCTION	5	EA		_____ DOLLARS AND _____ CENTS	
620A 000	MINOR STRUCTURE CONCRETE	40	CY		_____ DOLLARS AND _____ CENTS	
621A 000	JUNCTION BOX, PARTIAL (TOP)	10	EA		_____ DOLLARS AND _____ CENTS	
621C 001	INLET, TYPE S1 OR S3 (TWO WING) PARTIAL (TOP AND THROAT)	15	EA		_____ DOLLARS AND _____ CENTS	
621C 002	INLET, TYPE S1 OR S3 (ONE WING) PARTIAL (TOP AND THROAT)	15	EA		_____ DOLLARS AND _____ CENTS	
621C 003	INLET, CITY C-INLET (NO WING) PARTIAL (TOP AND THROAT)	10	EA		_____ DOLLARS AND _____ CENTS	
623A 000	CONCRETE GUTTER (ALL TYPES) (INCLUDING SAW CUTTING)	70	LF		_____ DOLLARS AND _____ CENTS	
623B 000	CONCRETE CURB (ALL TYPES) (INCLUDING SAW CUTTING)	70	LF		_____ DOLLARS AND _____ CENTS	
623C 000	COMBINATION CURB AND GUTTER (INCLUDING SAW CUTTING)	100	LF		_____ DOLLARS AND _____ CENTS	
645U 505	12 INCH CURED IN PLACE LINER	300	LF		_____ DOLLARS AND _____ CENTS	

ITEM NO.	DESCRIPTION	QTY	UNIT	UNIT PRICE	UNIT PRICE (WRITTEN IN WORDS)	CONTRACT PRICE
645U 510	15 INCH CURED IN PLACE LINER	300	LF		_____ DOLLARS AND _____ CENTS	
645U 512	18 INCH CURED IN PLACE LINER	350	LF		_____ DOLLARS AND _____ CENTS	
645U 515	24 -27 INCH CURED IN PLACE LINER	400	LF		_____ DOLLARS AND _____ CENTS	
645U 520	30 INCH CURED IN PLACE LINER	300	LF		_____ DOLLARS AND _____ CENTS	
645U 525	36 INCH CURED IN PLACE LINER	400	LF		_____ DOLLARS AND _____ CENTS	
645U 530	42 INCH CURED IN PLACE LINER	200	LF		_____ DOLLARS AND _____ CENTS	
645U 535	48 INCH CURED IN PLACE LINER	150	LF		_____ DOLLARS AND _____ CENTS	
645U 540	54 INCH CURED IN PLACE LINER	100	LF		_____ DOLLARS AND _____ CENTS	
645U 545	60 INCH CURED IN PLACE LINER	50	LF		_____ DOLLARS AND _____ CENTS	
650A 000	TOPSOIL	50	CY		_____ DOLLARS AND _____ CENTS	
654A 000	SOLID SODDING (MATCH EXISTING)	200	SY		_____ DOLLARS AND _____ CENTS	
690A 000	DEWATERING	15	DAY		_____ DOLLARS AND _____ CENTS	
665A 000	TEMPORARY SEEDING	4	AC		_____ DOLLARS AND _____ CENTS	

ITEM NO.	DESCRIPTION	QTY	UNIT	UNIT PRICE	UNIT PRICE (WRITTEN IN WORDS)	CONTRACT PRICE
665B 000	TEMPORARY MULCHING	4	TON		_____ DOLLARS AND _____ CENTS	
665E 000	POLYETHYLENE	500	SY		_____ DOLLARS AND _____ CENTS	
665G 000	SAND BAGS	60	EA		_____ DOLLARS AND _____ CENTS	
665J 000	SILT FENCE	200	LF		_____ DOLLARS AND _____ CENTS	
665K 000	SILT FENCE REMOVAL	200	LF		_____ DOLLARS AND _____ CENTS	
665P 005	INLET PROTECTION, STAGE 3 OR 4	6	EA		_____ DOLLARS AND _____ CENTS	
665R 000	WATTLES	200	LF		_____ DOLLARS AND _____ CENTS	
674A 000	CONSTRUCTION SAFETY FENCE	100	LF		_____ DOLLARS AND _____ CENTS	
740A 100	FURNISHING, INSTALLING, AND IMPLEMENTING TRAFFIC CONTROL 2-LANES 25-35 MPH	8	DAY		_____ DOLLARS AND _____ CENTS	
740A 200	FURNISHING, INSTALLING, AND IMPLEMENTING TRAFFIC CONTROL OVER 35 MPH	8	DAY		_____ DOLLARS AND _____ CENTS	
740A 300	FURNISHING, INSTALLING, AND IMPLEMENTING TRAFFIC CONTROL OVER 3 LANES	8	DAY		_____ DOLLARS AND _____ CENTS	

ITEM NO.	DESCRIPTION	QTY	UNIT	UNIT PRICE	UNIT PRICE (WRITTEN IN WORDS)	CONTRACT PRICE
741C 000	PORTABLE SEQUENTIAL ARROW CHEVRON SIGN UNIT	8	DAY		_____ DOLLARS AND _____ CENTS	
745A 000	UNIFORMED POLICE OFFICER	75	HOUR		_____ DOLLARS AND _____ CENTS	
999A 001	TRACKHOE & OPERATOR DAILY RATE (SEDIMENT REMOVAL FOR DITCH CLEANING ONLY)	1	DAY		_____ DOLLARS AND _____ CENTS	
999A 002	BACKHOE & OPERATOR DAILY RATE (SEDIMENT REMOVAL FOR DITCH CLEANING ONLY)	1	DAY		_____ DOLLARS AND _____ CENTS	
999A 003	DUMP TRUCK & DRIVER DAILY RATE (SEDIMENT REMOVAL FOR DITCH CLEANING ONLY)	1	DAY		_____ DOLLARS AND _____ CENTS	
999A 004	2 LABORERS DAILY RATE (SEDIMENT REMOVAL FOR DITCH CLEANING ONLY)	1	DAY		_____ DOLLARS AND _____ CENTS	
999X 000	WORK OF A SIMILAR NATURE UTILIZING BID ITEMS TO BE DETERMINED BY THE CITY OF MOBILE PROJECT MANAGER	1	LS	$20,000.00	TWENTY THOUSAND DOLLARS AND NO CENTS	
				TOTAL BASE BID		

ADDITIVE BID

ITEM NO.	DESCRIPTION	QTY	UNIT	UNIT PRICE	UNIT PRICE (WRITTEN IN WORDS)	CONTRACT PRICE
206C 000	REMOVING CONCRETE SIDEWALK (INCL. SAW CUTTING)	20	SY		_____ DOLLARS AND _____ CENTS	
206C 010	REMOVING CONCRETE DRIVEWAY (INCLUDING SAW CUTTING)	20	SY		_____ DOLLARS AND _____ CENTS	
206C 020	REMOVING ASPHALT PAVEMENT (INCL. SAW CUTTING)	15	SY		_____ DOLLARS AND _____ CENTS	
206D 003	REMOVING CONCRETE GUTTER AND/OR CURB (ALL TYPES) (INCLUDING SAW CUTTING)	20	LF		_____ DOLLARS AND _____ CENTS	
206D 005	REMOVING PIPE 24" OR LESS DIAMETER	30	LF		_____ DOLLARS AND _____ CENTS	
206D 006	REMOVING PIPE 27" -36" DIAMETER	30	LF		_____ DOLLARS AND _____ CENTS	
206E 000	REMOVING INLETS, PARTIAL TOP AND THROAT	4	EA		_____ DOLLARS AND _____ CENTS	
210A 000	UNCLASSIFIED EXCAVATION (INCL. SAW CUTTING)	20	CY		_____ DOLLARS AND _____ CENTS	
210D 000	BORROW EXCAVATION (LOOSE TRUCKBED MEASUREMENT) (A-2 OR BETTER)	20	CY		_____ DOLLARS AND _____ CENTS	
214A 000	STRUCTURE EXCATION (0' TO 6' DEPTH)	15	CY		_____ DOLLARS AND _____ CENTS	

ITEM NO.	DESCRIPTION	QTY	UNIT	UNIT PRICE	UNIT PRICE (WRITTEN IN WORDS)	CONTRACT PRICE
301A 000	CRUSHED AGGREGATE BASE COURSE, TYPE B, PLANT MIXED, 6" COMPACTED THICKNESS	50	TON		_____ DOLLARS AND _____ CENTS	
305B 000	57 STONE	25	TON		_____ DOLLARS AND _____ CENTS	
424A 002	SUPERPAVE BITUMINOUS CONCRETE WEARING SURFACE LAYER, PATCHING OR LEVELING, 1/2" MAXIMUM AGG. SIZE MIX, ESAL RANGE C/D	20	TON		_____ DOLLARS AND _____ CENTS	
533A 001	15" STORM SEWER (CLASS 3 R.C.)	24	LF		_____ DOLLARS AND _____ CENTS	
533A 002	18" STORM SEWER (CLASS 3 R.C.)	24	LF		_____ DOLLARS AND _____ CENTS	
539A 001	PIPELINE CLEANING - 12"-24"	300	LF		_____ DOLLARS AND _____ CENTS	
539A 002	PIPELINE CLEANING - 27"-36"	300	LF		_____ DOLLARS AND _____ CENTS	
539A 010	PIPELINE VIDEOING - 12"-24"	500	LF		_____ DOLLARS AND _____ CENTS	
539A 020	PIPELINE VIDEOING - 27"-36"	500	LF		_____ DOLLARS AND _____ CENTS	
610D 000	FILTER BLANKET, GEOTEXTILE FILTER FABRIC (WOVEN TYPE)	50	SY		_____ DOLLARS AND _____ CENTS	

ITEM NO.	DESCRIPTION	QTY	UNIT	UNIT PRICE	UNIT PRICE (WRITTEN IN WORDS)	CONTRACT PRICE
618A 000	CONCRETE SIDEWALK, 4" THICK (INCL. EXCAVATION) (WIDTH VARIES)	50	SY		_____ DOLLARS AND _____ CENTS	
618A 005	CONCRETE SIDEWALK, 5" THICK (INCL. REINFORCEMENT AND EXCAVATION) (WIDTH VARIES)	30	SY		_____ DOLLARS AND _____ CENTS	
618B 000	CONCRETE DRIVEWAY (MATCH EXISTING)- INCL. REINFORCEMENT& SAW CUTTING	20	SY		_____ DOLLARS AND _____ CENTS	
620A 000	MINOR STRUCTURE CONCRETE	10	CY		_____ DOLLARS AND _____ CENTS	
621A 000	JUNCTION BOX, PARTIAL (TOP)	5	EA		_____ DOLLARS AND _____ CENTS	
621C 001	INLET, TYPE S1 OR S3 (TWO WING) PARTIAL (TOP AND THROAT)	6	EA		_____ DOLLARS AND _____ CENTS	
621C 002	INLET, TYPE S1 OR S3 (ONE WING) PARTIAL (TOP AND THROAT)	6	EA		_____ DOLLARS AND _____ CENTS	
621C 003	INLET, CITY C-INLET (NO WING) PARTIAL (TOP AND THROAT)	5	EA		_____ DOLLARS AND _____ CENTS	
623A 000	CONCRETE GUTTER (ALL TYPES) (INCL. SAW CUTTING)	20	LF		_____ DOLLARS AND _____ CENTS	
623B 000	CONCRETE CURB (ALL TYPES) (INCL. SAW CUTTING)	25	LF		_____ DOLLARS AND _____ CENTS	

ITEM NO.	DESCRIPTION	QTY	UNIT	UNIT PRICE	UNIT PRICE (WRITTEN IN WORDS)	CONTRACT PRICE
623C 000	COMBINATION CURB AND GUTTER (INCL. SAW CUTTING)	30	LF		_____ DOLLARS AND _____ CENTS	
623A 000	CONCRETE GUTTER (ALL TYPES) (INCL. SAW CUTTING)	25	LF		_____ DOLLARS AND _____ CENTS	
623B 000	CONCRETE CURB (ALL TYPES) (INCL. SAW CUTTING)	50	LF		_____ DOLLARS AND _____ CENTS	
623C 000	COMBINATION CURB AND GUTTER (INCL. SAW CUTTING)	1	LF		_____ DOLLARS AND _____ CENTS	
623A 000	CONCRETE GUTTER (ALL TYPES) (INCL. SAW CUTTING)	1	LF		_____ DOLLARS AND _____ CENTS	
623B 000	CONCRETE CURB (ALL TYPES) (INCL. SAW CUTTING)	300	LF		_____ DOLLARS AND _____ CENTS	
623C 000	COMBINATION CURB AND GUTTER (INCL. SAW CUTTING)	30	LF		_____ DOLLARS AND _____ CENTS	
623A 000	CONCRETE GUTTER (ALL TYPES) (INCL. SAW CUTTING)	100	LF		_____ DOLLARS AND _____ CENTS	
623B 000	CONCRETE CURB (ALL TYPES) (INCL. SAW CUTTING)	100	LF		_____ DOLLARS AND _____ CENTS	
623C 000	COMBINATION CURB AND GUTTER (INCL. SAW CUTTING)	100	LF		_____ DOLLARS AND _____ CENTS	
623A 000	CONCRETE GUTTER (ALL TYPES) (INCL. SAW CUTTING)	50	LF		_____ DOLLARS AND _____ CENTS	
				TOTAL ADDITIVE BID		

Proposal

Base Bid (Total of all items listed in Base Bid) 1,316,457.92

Additive Bid (Total of all items listed in Additive Bid) 115,691.44

Grand Total (All items listed in Base Bid + Additive Bid) 1,432,149.36

Grand Total Written in words One Million Four Hundred Thirty Two ThousAND one hundred FORTY NINE Dollars and thirty six cents

Number of working days to complete construction will be specified in each individual task order.

Signature of Bidder _____
(If a firm or individual)

Address of Bidder 3025 Dial St
Mobile, AL 36612

By Chris Brewer

Signature of Bidder _____
(If a Corporation)

By _____
President
Chris Brewer
Print

_____
Secretary
Carson Tortorice
Print

_____
Treasurer

_____
Print

Business Address 3025 Dial St Mobile, AL 36612

Business Address 3025 Dial St Mobile, AL 36612

Business Address _____

(Corporate Seal)

ATTEST: _____
Secretary

Name of State under the Laws of which the Corporation was chartered:

40677
State License Number

Corporate Seal

ITEM IV
BID BOND

KNOW ALL MEN BY THESE PRESENT:

That Chris Brewer Contracting, Inc.
(Name of Contractor)
PO Box 70211 Mobile, AL 36670
(Address)
as Principal, and Granite Re, Inc.
(Name of Surety)
14001 Quailbrook Drive Oklahoma City, OK 73134
(Address)

as Surety, are held firmly bound unto the City of Mobile, a Political Subdivision of and Body Corporate in the State of Alabama as Obligee, in the full and just sum of five percent (5%) of amount bid (maximum amount of Bond is $10,000) lawful money of the United States, for the payment of which sum, well and truly to be make, we bind ourselves, our heirs, executors, administrators, successors and assigns, jointly and severally, firmly by these presents.

WHEREAS, the said principal is herewith submitting its proposal for **2026 PUBLIC SERVICES STORM DRAINAGE REPAIR & MAINTENANCE, City of Mobile Project No. *2026-2070-01SW*.**

The condition of this obligation is such that if the aforesaid Principal shall be awarded the contract the said Principal will, within the time required, enter into a formal contract and give a good and sufficient bond to secure the performance of the terms of and conditions of the Contract, then this obligation is to be void; otherwise, the Principal and the Surety will pay unto the Obligee the difference in money between the amount of the Contract as awarded and the amount of the proposal of the next lowest bidder, which amount shall not exceed $10,000. If no other bids are received, the full amount of the proposal guarantee shall be so retained or recovered as liquidated damages for such default.

Signed, Sealed and Delivered June 10, 2026 (Date)

Chris Brewer Contracting, Inc. (Contracting Firm)

Witness as to Principal By: _____ (SEAL)

_____ Granite Re, Inc. (Name of Surety)

COUNTERSIGNED: Francis Ware AL#0453430

Alabama Resident Agent By Francis Ware
Attorney-in-Fact & AL Resident Agent

BIDS WILL NOT BE CONSIDERED UNLESS BID BOND IS SIGNED BY PRINCIPAL AND SURETY.

GRANITE RE, INC.
GENERAL POWER OF ATTORNEY

Know all Men by these Presents:

That GRANITE RE, INC., a corporation organized and existing under the laws of the State of MINNESOTA and having its principal office at the City of OKLAHOMA CITY in the State of OKLAHOMA does hereby constitute and appoint:

SONYA D. BERRYMAN; LEN SKIPPER; FRANCIS WARE; CHRISTY HICKS for the following purposes, to wit:

To sign its name as surety to, and to execute, seal and acknowledge any and all bonds, and to respectively do and perform any and all acts and things set forth in the resolution of the Board of Directors of the said GRANITE RE, INC. a certified copy of which is hereto annexed and made a part of this Power of Attorney; and the said GRANITE RE, INC. through us, its Board of Directors, hereby ratifies and confirms all and whatsoever the said:

SONYA D. BERRYMAN; LEN SKIPPER; FRANCIS WARE; CHRISTY HICKS may lawfully do in the premises by virtue of these presents.

In Witness Whereof, the said GRANITE RE, INC. has caused this instrument to be sealed with its corporate seal, duly attested by the signatures of its President and Assistant Secretary, this 31st day of July, 2023.

Kenneth D. Whittington, President

Kyle P. McDonald, Assistant Secretary

STATE OF OKLAHOMA)
) SS:
COUNTY OF OKLAHOMA)

On this 31st day of July, 2023, before me personally came Kenneth D. Whittington, President of the GRANITE RE, INC. Company and Kyle P. McDonald, Assistant Secretary of said Company, with both of whom I am personally acquainted, who being by me severally duly sworn, said, that they, the said Kenneth D. Whittington and Kyle P. McDonald were respectively the President and the Assistant Secretary of GRANITE RE, INC., the corporation described in and which executed the foregoing Power of Attorney; that they each knew the seal of said corporation; that the seal affixed to said Power of Attorney was such corporate seal, that it was so fixed by order of the Board of Directors of said corporation, and that they signed their name thereto by like order as President and Assistant Secretary, respectively, of the Company.

My Commission Expires:
April 21, 2027
Commission #: 11003620

Notary Public

GRANITE RE, INC.
Certificate

THE UNDERSIGNED, being the duly elected and acting Assistant Secretary of Granite Re, Inc., a Minnesota Corporation, HEREBY CERTIFIES that the following resolution is a true and correct excerpt from the July 15, 1987, minutes of the meeting of the Board of Directors of Granite Re, Inc. and that said Power of Attorney has not been revoked and is now in full force and effect.

"RESOLVED, that the President, any Vice President, the Assistant Secretary, and any Assistant Vice President shall each have authority to appoint individuals as attorneys-in-fact or under other appropriate titles with authority to execute on behalf of the company fidelity and surety bonds and other documents of similar character issued by the Company in the course of its business. On any instrument making or evidencing such appointment, the signatures may be affixed by facsimile. On any instrument conferring such authority or on any bond or undertaking of the Company, the seal, or a facsimile thereof, may be impressed or affixed or in any other manner reproduced; provided, however, that the seal shall not be necessary to the validity of any such instrument or undertaking."

IN WITNESS WHEREOF, the undersigned has subscribed this Certificate and affixed the corporate seal of the Corporation this 10th day of June, 2026.

Kyle P. McDonald, Assistant Secretary

GR0800-1

ITEM IX
ARTICLES OF AGREEMENT

STATE OF ALABAMA)
COUNTY OF MOBILE)
CITY OF MOBILE)

(Executed in Quintuplicate)

(1) **THIS AGREEMENT** is made and entered into by and between the **CITY OF MOBILE, ALABAMA** (hereinafter "CITY"), acting by and through its MAYOR and CITY COUNCIL, and CHRIS BREWER CONTRACTING, INC. (hereinafter "CONTRACTOR"), and shall be effective as of the date this Agreement is last signed by all parties hereto (the "Effective Date").

WITNESSETH: That the said party of the second part has agreed and by these present does agree with the said party of the first part, for the consideration hereinafter mentioned and contained, and under the penalty expressed in a bond bearing even date with these presents and hereunto annexed, to furnish at their/his own proper cost and expense, all the necessary materials, equipment and labor, of every description and to carry out and complete in a good, firm and substantial manner the following:

Project Name: 2026 PUBLIC SERVICES STORM DRAINAGE REPAIR & MAINTENANCE
Project No: 2026-2070-01SW
Project Description: Repair of storm drainage structures, ditches, and related roadway items
Major work items include: Repair and maintenance of storm drainage pipes, inlets, inlet tops, paved and unpaved ditches, sediment removal and roadway repairs

City of Mobile Project Number **2026-2070-01SW** , all complete in place with all appurtenances for the consideration of unit prices set forth in CONTRACTOR's Proposal (estimated to total $ 1,316,457.92) in strict accordance with this contract. The advertisement, proposal, special provisions, plans and specifications are all made a part of this agreement.

CITY:

(2) Wherever the word "CITY" is used, it shall refer to the City of Mobile, Alabama.

COUNCIL:

(3) Whenever the word "COUNCIL" is used in the Specifications, it shall refer to the governing body of the City of Mobile, Alabama, the party of the first part of the Agreement.

CONTRACT:

(4) Whenever the word "CONTRACT" is used it shall be held to mean the executed documents comprising the written agreement between the City of Mobile and the Contractor setting forth the obligations of the parties hereunder for the performance of the prescribed work. The Contract includes the invitation for bids, proposal, contract forms and contract bonds, specifications, supplemental specifications, special provisions, general and detailed plans, these Articles of Agreement, task orders, and any change orders that are required to complete the

construction of the work in an acceptable manner, including authorized extensions thereof, and such other documents as by law or references are made a part thereof, all of which constitute one instrument.

CONTRACTOR:

(5) Whenever the word "CONTRACTOR" is used it shall be held to mean any individual, corporation, partnership, or other entity selected to perform any or all construction services. The contractor shall be eligible to bid Alabama Department of Transportation projects at the time of the prebid conference to be considered a valid bidder for this project.

PUBLIC SERVICES ADMINISTRATION DIRECTOR:

(6) Whenever the word "PSA DIRECTOR" is used, it shall refer to the PUBLIC SERVICES ADMINISTRATION DIRECTOR for the City of Mobile or his appointed assistants.

PUBLIC SERVICES ADMINISTRATION PROJECT MANAGER (PSA-PM):

(7) Whenever the term "PSA-PM" is used, it shall refer to the PUBLIC SERVICES ADMINISTRATION PROJECT MANAGER for the City of Mobile, who is an appointed assistant of the PSA Director. The PSA-PM, or his appointed assistants, are assigned to perform construction management and inspection services for this project.

AUTHORITY OF THE PUBLIC SERVICES ADMINISTRATION DIRECTOR:

(8) The PSA DIRECTOR, or his appointed assistants, will decide all questions which may arise as to the quality and acceptability of materials furnished and work performed and as to the rate of progress of the work; all questions which may arise as to the interpretation of the plans and specifications; all questions as to the acceptable fulfillment of the contract on the part of the CONTRACTOR.

The PSA-PM shall have the authority to withhold further payment or to suspend the work wholly or in part due to failure of the CONTRACTOR to correct conditions unsafe for the workmen or the general public; failure to carry out provisions of the contract; failure to carry out orders; for such periods as he may deem necessary due to unsuitable weather; for conditions unsuitable for prosecution of the work; or for any other conditions or reason deemed to be in the public interest.

DUTIES OF THE CONTRACTOR:

(9) The work performed under this contract and agreement shall be in strict compliance with the "State of Alabama Highway Department Standard Specifications for Highway Construction", 2018 Edition, with all latest additions and modifications by the PSA and Engineering Departments of the City of Mobile and with the plans on file in the office of the PSA-PM or as noted herein.

ARBITRATOR:

(10) Both parties to this contract hereby agree that the CITY PSA DIRECTOR shall act as referee in all questions and disputes arising under the terms of this Contract between the parties thereto and that the decision of the CITY PSA DIRECTOR in all such cases shall be final.

STANDARD SPECIFICATIONS:

(11) Whenever the word "STANDARD SPECIFICATIONS" is used, it shall refer to State of Alabama Department of Transportation Standard Specifications for Highway Construction, 2018 edition, with all latest additions and modifications by the PSA and Engineering Departments of the City of Mobile, a copy of which is on file in the office of the PSA-PM.

WAGE SCALE:

(12) The CONTRACTOR will be required to pay the prevailing wage rates for this district that are applicable to the trades engaged in the several different lines of work.

APPOINTMENT AND AUTHORITY OF INSPECTORS:

(13) The PSA-PM may appoint such Inspectors, assistants, or representatives as he deems necessary, and they shall be granted full access to the work and to the mills and factories in which material is being prepared for use under the contract.

Inspectors will be authorized to inspect all work done and materials furnished. Such inspection may extend to all or any part of the work and to the preparation, fabrication or manufacture of the materials to be used. The inspector will not be authorized to alter or waive the provisions of this contract. The inspector will not be authorized to issue instructions contrary to the plans and specifications, or to act as foreman for the CONTRACTOR; however, he shall have the authority to reject work or materials until any questions at issue can be referred to and decided by the PSA-PM.

The PSA-PM reserves the right to require replacement of any inspector considered to be unqualified for the work.

INSPECTION:

(14) Inspection and acceptance of materials and construction during the progress of the work shall not relieve the CONTRACTOR from any of the obligations assumed under this contract to furnish materials and to perform work strictly in accordance with its terms, and any work in accordance therewith (although overlooked and passed), shall be made good and inferior materials shall be removed and replaced with proper materials upon the demand of the PSA-PM at any time prior to the completion of the work and its acceptance by the PSA-PM.

INCOMPETENT EMPLOYEES TO BE DISCHARGED:

(15) If the work of any person employed by the CONTRACTOR should appear to the PSA-PM to be incompetent or disorderly, he shall be immediately discharged upon the request of the PSA-PM.

CHANGES AND EXTRA WORK PRECAUTIONS TO PREVENT ACCIDENT:

(16) Should the COUNCIL deem it proper or necessary in the execution of the work to make any alterations, which shall increase or diminish the quantities or the expense, such alterations or reductions shall not validate or annul the contract or agreement hereby entered into. The said COUNCIL shall determine the value of the work to be added or omitted; such value to be added to or to be deducted from the contract price as the case may be.

No claim whatsoever shall be made by the CONTRACTOR for extra materials or work, or for a greater amount of money than is herein stipulated to be paid, unless some changes in or additions to said work requiring additional outlay by the CONTRACTOR shall first have been ordered, in writing, by the said COUNCIL on application of the PSA-PM. Said writing will be attached to the contract for the making of said improvements, stating that such work is not included in the contract, what the extras are and that such are necessary for the proper completion of the work, or for the security of the work previously done and the reason therefor.

RESPONSIBILITY FOR ACCIDENTS:

(17) The CONTRACTOR covenants to and shall defend, hold harmless, indemnify and exonerate the CITY and any of its officers, directors and employees of and from any and all claims, demands, liability, losses, damages, suits and/or judgments, whether frivolous or otherwise of any character, arising out of, or connected with, the work covered by this contract, regardless of how it may be caused. The CONTRACTOR shall be responsible for providing the City of Mobile and any of its officers, directors, and employees a defense and paying all costs of defending it and investigating said claims, including attorney's fees and expenses.

WORK TO BE PROSECUTED AS DIRECTED:

(18) All work shall be done according to the direction of the PSA-PM or his authorized assistant.

GENERAL COMPLIANCE WITH LAWS:

(19) The Contractor shall comply with the provisions of the labor laws, state laws and federal and local statutes, ordinances and regulations that are applicable to the performance of this Agreement, and procure all necessary licenses and permits.

SUSPENSION OF WORK:

(20) If, in the opinion of the PSA-PM, during the progress of the work the conditions of the weather make it inexpedient or hazardous to proceed with the same, or if the public need seems to demand a temporary suspension, prosecution of the project shall cease for such a period as the PSA-PM may direct in writing. No allowance will be made to the CONTRACTOR for damages alleged to have been sustained on account of such suspension of the work. The period of such cessation shall be determined and recorded by the PSA-PM and shall be added to the time herein specified for the completion of the work. It is further agreed that in case of any legal obstruction or injunction affecting the prosecution of the work, such delay shall extend the time of completion of such part or parts of the work as obstructed and delayed for the length of time the obstruction continued and no longer. No damages shall be claimed or allowed the CONTRACTOR by reason of such unavoidable delay.

DELAYS:

(21) Delay in completion or the acceptance of any portion of the work shall not be deemed or construed as a waiver of any of the rights of the CITY under this contract, or to prevent the abrogation of this contract on account of the violations of its terms or the enforcement and collection of any just claim for loss or damage sustained by the CITY by reason thereof. Should delay arise by reason of the neglect or inability of the CONTRACTOR to prosecute the work or to furnish materials to the extent that, in the opinion of the PSA-PM, it becomes necessary to ensure the completion within the limit of time specified to this contract, the PSA-PM shall serve a warning to the CONTRACTOR requiring him to provide the means or

material to insure the completion of work. Should such warning be disregarded to the extent that unnecessary and unreasonable delay is likely, in the opinion of the PSA-PM, to ensue, the PSA-PM shall notify the COUNCIL of such fact. Should said COUNCIL so elect, the CITY may complete the contract using for such purpose all materials and tools found upon the work site and belonging to the CONTRACTOR. The COUNCIL shall assess the cost of such work against the sum, which would have been due under this contract.

TASKORDERS:

(22) The amount of work to be performed pursuant to the Contract will be more specifically identified in Task Orders to be issued by the City. Each Task Order will include various line items of work as described herein. Each Task Order may include additional instructions regarding the work requested thereunder. Each Task Order shall be considered part of the Contract Documents and shall be incorporated herein upon issuance of the Task Order by the City. A written Notice to Proceed will not be issued for each Task Order. Receipt by the Contractor of a Task Order will be considered as the directive from the City for the Contractor to proceed with the associated work. No amount of work is guaranteed to be issued through Task Orders.

Each Task Order shall contain an identification of the project ("Project"), description of the work to be completed, compensation to be paid to CONTRACTOR for the performance of the Services ("Compensation"), and a proposed schedule for the performance ("Project Schedule") for the Services.

Upon mutual agreement of the parties, the Task Order shall be finalized and executed by the parties. The effective date of the task order will be as set forth in the individual Task Order.

Changes to the Task Order shall be made in writing and signed by both parties, in accordance with Article 7 herein.

COMMENCEMENT AND COMPLETION:

(23) The work shall commence within ten (10) calendar days from the date specified on the Task Order to be issued to the Contractor by the PSA-PM, or his authorized representative, and shall be completed within the number of working days indicated in the Task Order. In the event the Contractor should fail to complete the work within the time specified herein, the Contractor shall pay the Council, as liquidated damages, the amount specified in Section 108 of the Standard Specifications for each working day beyond the required date of completion.

TERM:

(24) The term of the Contract shall be one (1) year from the effective date of execution of the Contract. This agreement may be terminated by the CITY for any reason, pursuant to this Agreement. Nothing in this agreement grants exclusive rights to the CONTRACTOR to perform the type of work described in the Contract Documents for the City. This contract may be extended for two (2) additional one-year periods, not to exceed a total of three (3) years. The extensions shall be, under the existing terms, conditions, and unit prices, at the discretion of the PSA-PM, and by written agreement with the CONTRACTOR, contingent upon the addition of working days and/or the obligation of additional funds for similar work.

In the event of the expiration or partial termination of this Agreement, CONTRACTOR shall, unless otherwise directed by City, complete its performance of any outstanding Task Orders then pending in accordance with the terms and conditions of such Task Order(s) as may be further amended and this Agreement. In such case, the specifications, terms and conditions of the Task Order(s) and this Agreement shall be deemed to have survived the expiration of this Agreement with respect to such Task Order(s) until such time as the Task Order(s) are completed.

ESTIMATE:

(25) Upon the final completion of the work on each Task Order, according to the terms of these Articles of Agreement, the Contractor shall prepare and submit an estimate to the PSA-PM for payment for all work performed and materials furnished. Each payment request must be accompanied by a DBE Utilization Report, a progress report, and photos clearly showing the quality and extent of the completed work. Photos must show the project site before, during, and after construction. Retainage shall not be withheld. Payment will not be made until completion of work is verified and is to the satisfaction of the PSA-PM. Upon receipt of the Contractor's estimate for payment, the PSA-PM shall inspect the work and, if satisfactory, shall pay or cause to be paid to the Contractor the estimate, under the terms of these Articles of Agreement. If a Task Order is scheduled for 30 working days or more, the Contractor may submit an estimate for partial payment if approved by the PSA-PM.

Upon completion of all Task Orders, the Contractor shall furnish, to the PSA-PM, the following documents:

- The Contractor must publicly advertise the Notice of Completion a minimum of once a week for four consecutive weeks and submit proof of advertising publication, original form with notary seal, as required by Section 39-2-12 of the 1975 Code of Alabama.
- The Contractor must execute copies of Contractor's Affidavit of Payment of Claims and Debts.
- The Contractor must have his/her surety execute copies of Consent of Surety to Final Payment.
- The Contractor must furnish a letter on his letterhead acknowledging that acceptance of final payment by the Contractor constitutes a waiver of all claims, present or future, in connection with this project.
- The Contractor must ensure that a written guarantee on his letterhead covering all defects in material and workmanship for each Task Order has been submitted. Each guarantee must be for a period of one (1) year commencing on the date that final payment was made for each Task Order.
- The Contractor must provide a Maintenance Agreement for the grassing for each Task Order. Each guarantee must be for a period of one (1) year commencing on the date that final payment was made for each Task Order.
- The Contractor must provide a City of Mobile DBE Utilization Report summarizing DBE participation to include the name of the DBE firm, address, telephone number and amount paid. If there was no DBE participation on the project, this report must summarize the reasons why and document any attempts made to secure DBE participation.

Without the successful completion of these documents, the Contractor may be added to a list of irresponsible bidders.

E-VERIFY:

(26) By signing this contract, the contracting parties affirm, for the duration of the agreement, that they will not violate Federal Immigration Law or knowingly employ, hire for employment, or continue to employ an unauthorized alien within the State of Alabama. Furthermore, a contracting party found to be in violation of this provision shall be deemed in breach of the agreement and shall be responsible for all damages resulting therefrom.

The CONTRACTOR shall ensure that all subcontractors under his employment for this project shall participate in the e-verify program. The CONTRACTOR shall be responsible for having each subcontractor sign the enclosed e-verify form. Any subcontractor found to be in violation of this provision shall cause the CONTRACTOR to be in breach of the agreement and the CONTRACTOR shall be responsible for all damages resulting therefrom.

SOURCE OF FUNDS FOR PAYMENT:

(27) The source of funds for payment by City under this contract is the General Fund. Said funds are on hand at the time of the execution of this contract.

PROHIBITION OF BOYCOTTING:

(28) By signing this contract, the Contractor represents and agrees that it is not currently engaged in, nor will it engage in, any boycott of a person or entity based in or doing business with a jurisdiction with which the State of Alabama can enjoy open trade.

ANTI-DISCRIMINATION CLAUSE:

(29) Contractor shall comply with all Federal, State and local laws concerning nondiscrimination, including but not limited to City of Mobile Ordinance No. 14-034 which requires, inter alia, that all contractors performing work for the City of Mobile not discriminate on the basis of race, creed, color, national origin or disability, require that all subcontractors they engage do the same, and make every reasonable effort to assure that fifteen percent of the work performed under contract be awarded to socially and economically disadvantaged individuals and business entities.

GOVERNING LAW AND VENUE:

(30) This Agreement shall be governed by the laws of the State of Alabama, and the appropriate venue for any actions arising out of this Agreement shall be a court of proper jurisdiction in Mobile, Alabama.

TRIMBLE UNITY CONSTRUCT:

(31) The City utilizes Tremble Unity Construct (TUC) as its project management system. TUC is a secure data collection site: https://app.e-builder.net. Firms, including CONTRACTORS, shall use TUC as an essential component to project management with the City of Mobile.

TERMINATION:

(32) City may terminate all or part of this Agreement for City's convenience by providing thirty (30) days written notice to CONTRACTOR. In such event, CONTRACTOR

will be entitled to Compensation for the Services completely and satisfactorily performed up to the effective date of termination.

NOTICE:

(33) Any notice or communication required or permitted by this Agreement shall be deemed sufficiently given if in writing and when delivered personally or 48 hours after deposit with a receipted commercial courier service or the U.S. Postal Service as registered or certified mail, postage prepaid, and addressed as follows:

CITY OF MOBILE
Public Services Administration Department
1900 Hurtel Street
Mobile, Alabama 36605

Attn: Matt Anderson

or to such other address as the party to whom notice is to be given has furnished to the other party(ies) in the manner provided above.

SURVIVAL OF CONTRACT TERMINATION:

(34) The Articles relating to Indemnification, Data Rights, Governing Law and Venue shall survive completion of the Services, payment in full of the Compensation and termination of this Agreement.

MISCELLANEOUS:

Governing Law: The validity, construction and performance of this Agreement and all disputes between the parties arising out of this Agreement or as to any matters related to but not covered by this Agreement shall be governed by the laws, without regard to the laws as to choice or conflict of laws, of the State of Alabama.

Assignment: Neither this Agreement nor any rights under this Agreement may be assigned by any party, without the prior written consent of the other party.

Binding Effect: The provisions of this Agreement shall bind and inure to the benefit of the parties and their respective successors and permitted assigns.

Parties in Interest: Nothing in this Agreement, expressed or implied, is intended to confer on any person or entity other than the parties any right or remedy under or by reason of this Agreement.

Counterparts: This Agreement may be executed in one or more counterparts, each of which shall be deemed an original, but all of which together shall constitute a single agreement.

Amendment and Waiver: This Agreement may be amended, modified or supplemented only by a writing executed by each of the parties. Any party may in writing waive any provisions of this Agreement to the extent such provision is for the benefit of the waiving party. No action taken pursuant to this Agreement shall be deemed to constitute a waiver by that party of any

other party's compliance with provisions of this Agreement. No waiver by any party of a breach of any provision of this Agreement shall be construed as a waiver of any subsequent or different breach, and no forbearance by a party to seek a remedy for noncompliance or breach by another party shall be construed as a waiver of any right or remedy with respect to such noncompliance or breach.

Venue, Jurisdiction and Process: The parties agree that any suit, claim, or other action or proceeding relating to or arising out of this Agreement or any Task Order, including without limitation for the interpretation, performance, enforcement or breach of this Agreement or any Task Order, shall be instituted only in the Circuit Court for Mobile County, Alabama, and each party irrevocably submits to the jurisdiction of such proceeding and waives any and all objections to jurisdiction or venue that it may have under the laws of any state or otherwise in such proceeding.

Severability: The invalidity or unenforceability of any particular provision of this Agreement shall not affect the other provisions, and this Agreement shall be construed in all respects as if any invalid or unenforceable provision were omitted.

Preparation of Agreement: All provisions of this Agreement have been subject to full and careful review by and negotiation between CONTRACTOR and City. Each such party has availed itself of such legal advice and counsel as it, respectively, has deemed appropriate. The parties hereto agree that neither one of them shall be deemed to be the drafter or author of this Agreement, and in the event this Agreement is subject to interpretation or construction by a court of law or panel of arbitration, such court or panel shall not construe this Agreement or any portion hereof against either party as the drafter of this Agreement.

Entire Agreement: This Agreement embodies the entire agreement and understanding between the parties pertaining to the subject matter of this Agreement, and supersedes all prior agreements, understandings, negotiations, representations and discussions, whether verbal or written, of the parties pertaining to that subject matter.

SIGNATURE:

IN WITNESS WHEREOF, the parties to these presents have hereunto set their hand and seal the day and year first above written; the City of Mobile by its Mayor acting under and by virtue of the authority in him vested and the CONTRACTOR by such duly authorized officers or individuals as may be required by law.

CITY OF MOBILE

BY: _____

ITS MAYOR

_____(Print)

ATTEST:

BY: _____

CITY CLERK

_____(Print)

CONTRACTOR:

_____

AN INDIVIDUAL

_____(Print)

WITNESSES:

_____

Carson Tortorice (Print)

Chris Brewer Contracting, Inc.

CONTRACTOR: **(IF CORPORATION)**

_____(Print)

BY: C.S. Brewer

ITS PRESIDENT

C.S. Brewer (Print)

ATTEST:

_____

ITS SECRETARY

_____(Print)

Corporate Seal

_____

DATE

STATE OF ALABAMA }

COUNTY OF MOBILE }

I, the undersigned, Notary Public in and for said County in said State, hereby certify that Chris Brewer, whose name is signed to the foregoing instrument in the capacity of President of Chris Brewer Contracting Inc. and who is known to me, acknowledged before me on this day that, being informed of the contents of the instrument, he executed the same voluntarily on the day and date the same bears date.

Given under my hand and official seal of office this the 18th day of June, 2026.

Randall Hurd Carter

NOTARY PUBLIC My Commission Expires:

RANDALL HURD CARTER
NOTARY PUBLIC
ALABAMA STATE AT LARGE
COMM. EXP. 10/10/29

ITEM V
LABOR AND MATERIALS BOND

KNOW ALL MEN BY THESE PRESENT, that we _____

_____ as Principal and _____

_____ as Surety, are held and firmly bound unto said City of Mobile, a political subdivision of the body corporate in the State of Alabama, hereinafter called the Obligee, in the penal sum of _____ Dollars ($_____) lawful money of the United States, for the payment of which sum and truly to be made, we bind ourselves, our heirs, personal representatives, successors and assigns, jointly and severally, firmly by these presents.

WHEREAS, said Principal has entered into a certain Contract with said Obligee, dated _____, 20____ (hereinafter called the Contract) for **2026 PUBLIC SERVICES STORM DRAINAGE REPAIR & MAINTENANCE** which Contract the Specifications for said work shall be deemed a part hereof as fully as if set out herein.

NOW, THEREFORE, THE CONDITION OF THIS OBLIGATION IS SUCH THAT if said Principal, all subcontractors to whom any portion of the work in said Contract is sublet, all assignees of said Principal and of such subcontractors shall promptly make payments to all persons supplying him or them with labor, materials, or supplies for or in the prosecution of the work provided for in such Contract, or in any amendment or extension of or addition to said Contract, and for the payment of reasonable attorney's fees, incurred by the successful claimant or plaintiffs in suits or claims against the CONTRACTOR arising out of or in connection with the said Contract, then the above obligation shall be void; otherwise to remain in full force and effect.

PROVIDED, however, that this bond is subject to the following conditions and limitations:

(a) Any person, firm or corporation that has furnished labor, materials, or supplies for or in the projection of the work provided for in said Contract shall have a direct right of action against the Principal and Surety on this bond, which right of action shall be asserted in a proceeding, instituted in the CITY, in which the work provided for in said Contract is to be performed or in any CITY in which said Principal or Surety does business. Such right of action shall be asserted in a proceeding instituted in the name of the claimant or claimants for his or their use and benefit against the Principal and Surety or either of them (but not later than one year after the final settlement of said Contract falls due) in which action such claim or claims shall be adjusted and judgment rendered thereon.

(b) The Principal and Surety hereby designate and appoint the Mayor of the City of Mobile, Mobile County, State of Alabama, or his successor or representative, as the agent of each of them to receive and accept services of process or other pleading issued or filed in any proceeding instituted on this bond and hereby consent that such service shall be the same as personal service on the Principal and/or Surety.

(c) The Surety shall not be liable hereunder for any damage or compensation recoverable under Workmen's Compensation or Employer's Liability Statute.

(d) In no event shall the Surety be liable for a greater sum than the penalty of this bond, or subject to any suit, action or proceeding thereon that is instituted later than one year after the final settlement of said contract.

(e) This Bond is given pursuant to the terms of an Act of the Legislature of the State of Alabama approved February 8, 1935, entitled: "An Act to Further Provide for Bonds of Contractors on State and Other Public Works and Suits Thereon."

SIGNED, SEALED AND DELIVERED this _____ day of _____ 20_____.

Individual Principals sign here

_____(SEAL)

In the presence of: _____(Print)

_____(SEAL)

_____ _____(Print)

_____(SEAL)

_____ _____(Print)

(Corporate Name)

BY: _____

ATTEST: (Signature)

_____ _____

(Signature) (Print)

_____(Print) ITS: _____

ITS: _____ (Title)

(Surety sign here) (Corporate name)

BY: _____

(Signature)

ATTEST: _____

_____ (Print)

(Signature) ITS: _____

_____(Print) (Title)

ITS: _____

Corporate Seal

ITEM V
LABOR AND MATERIALS BOND

KNOW ALL MEN BY THESE PRESENT, that we Chris Brewer Contracting, Inc.

PO Box 70211 Mobile, AL 36607 as Principal and Granite Re, Inc.

14001 Quailbrook Drive Oklahoma City, OK 73134 as Surety, are held and firmly bound unto said City of Mobile, a political subdivision of the body corporate in the State of Alabama, hereinafter called the Obligee, in the penal sum of One Million Four Hundred Thirty-Two Thousand One Hundred Forty-Nine Dollars and 36/100 Dollars ($ 1,432,149.36) lawful money of the United States, for the payment of which sum and truly to be made, we bind ourselves, our heirs, personal representatives, successors and assigns, jointly and severally, firmly by these presents.

WHEREAS, said Principal has entered into a certain Contract with said Obligee, dated _____, 20____ (hereinafter called the Contract) for **2026 PUBLIC SERVICES STORM DRAINAGE REPAIR & MAINTENANCE** which Contract the Specifications for said work shall be deemed a part hereof as fully as if set out herein.

NOW, THEREFORE, THE CONDITION OF THIS OBLIGATION IS SUCH THAT if said Principal, all subcontractors to whom any portion of the work in said Contract is sublet, all assignees of said Principal and of such subcontractors shall promptly make payments to all persons supplying him or them with labor, materials, or supplies for or in the prosecution of the work provided for in such Contract, or in any amendment or extension of or addition to said Contract, and for the payment of reasonable attorney's fees, incurred by the successful claimant or plaintiffs in suits or claims against the CONTRACTOR arising out of or in connection with the said Contract, then the above obligation shall be void; otherwise to remain in full force and effect.

PROVIDED, however, that this bond is subject to the following conditions and limitations:

(a) Any person, firm or corporation that has furnished labor, materials, or supplies for or in the projection of the work provided for in said Contract shall have a direct right of action against the Principal and Surety on this bond, which right of action shall be asserted in a proceeding, instituted in the CITY, in which the work provided for in said Contract is to be performed or in any CITY in which said Principal or Surety does business. Such right of action shall be asserted in a proceeding instituted in the name of the claimant or claimants for his or their use and benefit against the Principal and Surety or either of them (but not later than one year after the final settlement of said Contract falls due) in which action such claim or claims shall be adjusted and judgment rendered thereon.

(b) The Principal and Surety hereby designate and appoint the Mayor of the City of Mobile, Mobile County, State of Alabama, or his successor or representative, as the agent of each of them to receive and accept services of process or other pleading issued or filed in any proceeding instituted on this bond and hereby consent that such service shall be the same as personal service on the Principal and/or Surety.

(c) The Surety shall not be liable hereunder for any damage or compensation recoverable under Workmen's Compensation or Employer's Liability Statute.

(d) In no event shall the Surety be liable for a greater sum than the penalty of this bond, or subject to any suit, action or proceeding thereon that is instituted later than one year after the final settlement of said contract.

(e) This Bond is given pursuant to the terms of an Act of the Legislature of the State of Alabama approved February 8, 1935, entitled: "An Act to Further Provide for Bonds of Contractors on State and Other Public Works and Suits Thereon."

SIGNED, SEALED AND DELIVERED this _____ day of _____ 20_26_.

Individual Principals sign here

_____(SEAL)

In the presence of: _____(Print)

_____(SEAL)

_____ _____(Print)

_____(SEAL)

_____ _____(Print)

(Corporate Name) Chris Brewer Contracting, Inc.

BY: _____

(Signature)

ATTEST: _____

(Signature)

C.S. Brewer

(Print)

Carson Tortorich (Print) ITS: President

(Title)

ITS: [redacted] Secretary

(Surety sign here) (Corporate name) Granite Re, Inc.

BY: _____

(Signature)

ATTEST: _____

(Signature)

Christy Hicks

(Print)

Jan Wright (Print) ITS: Attorney-in-Fact

(Title)

ITS: Account Manager

GRANITE RE, INC. CORPORATE SEAL MINNESOTA

Corporate Seal

GRANITE RE, INC.

GENERAL POWER OF ATTORNEY

Know all Men by these Presents:

That GRANITE RE, INC., a corporation organized and existing under the laws of the State of MINNESOTA and having its principal office at the City of OKLAHOMA CITY in the State of OKLAHOMA does hereby constitute and appoint:

SONYA D. BERRYMAN; LEN SKIPPER; FRANCIS WARE; CHRISTY HICKS for the following purposes, to wit:

To sign its name as surety to, and to execute, seal and acknowledge any and all bonds, and to respectively do and perform any and all acts and things set forth in the resolution of the Board of Directors of the said GRANITE RE, INC. a certified copy of which is hereto annexed and made a part of this Power of Attorney; and the said GRANITE RE, INC. through us, its Board of Directors, hereby ratifies and confirms all and whatsoever the said:

SONYA D. BERRYMAN; LEN SKIPPER; FRANCIS WARE; CHRISTY HICKS may lawfully do in the premises by virtue of these presents.

In Witness Whereof, the said GRANITE RE, INC. has caused this instrument to be sealed with its corporate seal, duly attested by the signatures of its President and Assistant Secretary, this 31st day of July, 2023.

Kenneth D. Whittington, President

Kyle P. McDonald, Assistant Secretary

STATE OF OKLAHOMA)
) SS:
COUNTY OF OKLAHOMA)

On this 31st day of July, 2023, before me personally came Kenneth D. Whittington, President of the GRANITE RE, INC. Company and Kyle P. McDonald, Assistant Secretary of said Company, with both of whom I am personally acquainted, who being by me severally duly sworn, said, that they, the said Kenneth D. Whittington and Kyle P. McDonald were respectively the President and the Assistant Secretary of GRANITE RE, INC., the corporation described in and which executed the foregoing Power of Attorney; that they each knew the seal of said corporation; that the seal affixed to said Power of Attorney was such corporate seal, that it was so fixed by order of the Board of Directors of said corporation, and that they signed their name thereto by like order as President and Assistant Secretary, respectively, of the Company.

My Commission Expires:
April 21, 2027
Commission #: 11003620

Notary Public

GRANITE RE, INC.

Certificate

THE UNDERSIGNED, being the duly elected and acting Assistant Secretary of Granite Re, Inc., a Minnesota Corporation, HEREBY CERTIFIES that the following resolution is a true and correct excerpt from the July 15, 1987, minutes of the meeting of the Board of Directors of Granite Re, Inc. and that said Power of Attorney has not been revoked and is now in full force and effect.

"RESOLVED, that the President, any Vice President, the Assistant Secretary, and any Assistant Vice President shall each have authority to appoint individuals as attorneys-in-fact or under other appropriate titles with authority to execute on behalf of the company fidelity and surety bonds and other documents of similar character issued by the Company in the course of its business. On any instrument making or evidencing such appointment, the signatures may be affixed by facsimile. On any instrument conferring such authority or on any bond or undertaking of the Company, the seal, or a facsimile thereof, may be impressed or affixed or in any other manner reproduced; provided, however, that the seal shall not be necessary to the validity of any such instrument or undertaking."

IN WITNESS WHEREOF, the undersigned has subscribed this Certificate and affixed the corporate seal of the Corporation this _____ day of _____, 20____.

Kyle P. McDonald, Assistant Secretary

GR0800-1

ITEM VI
PERFORMANCE BOND

KNOW ALL MEN: That we _____
(Name of Contractor)
a Corporation, Partnership, or Individual (underline correct legal title of Contractor), hereinafter called the "Principal," and

_____
(Name and Address or legal title of one or more sureties)

hereinafter called the "Surety" or "Sureties," are held and firmly bound unto the Council of the City of Mobile, Alabama hereinafter called the "Owner," in the sum of _____ _____dollars ($_____), for the payment whereof the Principal and the Surety or Sureties bond themselves, their heirs, executors, administrators, successors and assigns, jointly and severally, firmly by these presents.

WHEREAS, the Principal has, by means of a written agreement dated _____, 20___, entered into a Contract with the Owner for **2026 PUBLIC SERVICES STORM DRAINAGE REPAIR & MAINTENANCE** which agreement is by reference made a part hereof.

NOW THEREFORE, the condition of this obligation is such that if the Principal shall faithfully perform the Contract on his part, and satisfy all claims and demands, incurred for the same, and shall fully indemnify and save harmless the Owner from all cost and damage which he may suffer by reason of failure to do so, and shall fully reimburse and repay the Owner all outlay and expense which the Owner may incur in making good any such default, thence this obligation shall be null and void; otherwise it shall remain in full force and effect.

PROVIDED, however, that no suit action or proceedings by reason of any default whatever be brought on his Bond after twelve months from the day on which the final payment under the Contract falls due.

PROVIDED, further that the said Surety, or Sureties, for the value received hereby stipulate and agree that no charge, extension of time or addition to the terms of the Contract or to the work to be performed thereunder of the Specifications thereof shall in any way effect their obligations on this bond, and they do hereby waive notice of such change, extension of time, alteration or addition to the terms of the contract, or to the work, or to the Specifications.

SIGNED, SEALED AND DELIVERED this _____ day of _____ 20_____.

Individual Principals sign here

_____(SEAL)

In the presence of:

_____(Print)

_____(SEAL)

_____

_____(Print)

_____(SEAL)

_____

_____(Print)

(Corporate Name)

BY: _____

ATTEST:

(Signature)

_____

_____

(Print)

(Signature)

_____(Print)

ITS: _____

ITS: _____

(Title)

(Title)

(Surety sign here) (Corporate name)

BY: _____

(Signature)

ATTEST:

_____

_____

(Print)

(Signature)

ITS: _____

_____(Print)

(Title)

ITS: _____

(Title)

Corporate Seal

During the performance of this contract, the CONTRACTOR agrees as follows:

1. The CONTRACTOR will not discriminate against any employee or applicant for employment because of race, creed, color, or national origin. The CONTRACTOR will take affirmative action to ensure that applicants are employed, and that employees are treated during employment, without regard to their race, creed, color or national origin. Such shall include but not be limited to the following:

   Employment, upgrading, demotion or transfer; recruitment or recruitment advertising; layoff or termination; rates of pay or other forms of compensation, and selection for training, include apprenticeship. The CONTRACTOR agrees to post in conspicuous places, available to employees and applicants for employment, notices to be provided by the contracting agency of the municipality setting forth the provisions of this nondiscrimination clause.

2. The CONTRACTOR will, in all solicitations or advertisements for employees placed by or on behalf of the CONTRACTOR, state that all qualifying applicants will receive consideration for employment without regard to race, creed, color, or national origin.

3. The CONTRACTOR will send to each labor union or representative of workers with which he has a collective bargaining agreement or other Contract or understanding, a notice to be provided by the municipal contracting agency, advising the labor union or workers' representative of the CONTRACTOR's commitments under this ordinance. Copies of the notice shall be posted in conspicuous places available to employees and applicants for employment.

4. In the event of the CONTRACTOR's non-compliance with the non-discrimination clauses of this Contract, this Contract may be canceled, terminated or suspended in whole or in part and the CONTRACTOR may be declared ineligible for further municipal contracts.

5. CONTRACTOR will include the provisions of this ordinance in every subcontract or purchase order unless exempted by written orders of the governing body of the City of Mobile so that provisions will be binding upon each subcontractor or vendor.

Bond# GRAL72398

ITEM VI
PERFORMANCE BOND

KNOW ALL MEN: That we Chris Brewer Contracting, Inc. PO Box 70211 Mobile, AL 36607
(Name of Contractor)
a Corporation, Partnership, or Individual (underline correct legal title of Contractor), hereinafter called the "Principal," and

Granite Re, Inc. 14001 Quailbrook Drive Oklahoma City, OK 73134
(Name and Address or legal title of one or more sureties)

hereinafter called the "Surety" or "Sureties," are held and firmly bound unto the Council of the City of Mobile, Alabama hereinafter called the "Owner," in the sum of One Million Four Hundred Thirty-Two Thousand One Hundred Forty-Nine Dollars and 36/100 dollars ($ 1,432,149.36), for the payment whereof the Principal and the Surety or Sureties bond themselves, their heirs, executors, administrators, successors and assigns, jointly and severally, firmly by these presents.

WHEREAS, the Principal has, by means of a written agreement dated _____, 20___, entered into a Contract with the Owner for **2026 PUBLIC SERVICES STORM DRAINAGE REPAIR & MAINTENANCE** which agreement is by reference made a part hereof.

NOW THEREFORE, the condition of this obligation is such that if the Principal shall faithfully perform the Contract on his part, and satisfy all claims and demands, incurred for the same, and shall fully indemnify and save harmless the Owner from all cost and damage which he may suffer by reason of failure to do so, and shall fully reimburse and repay the Owner all outlay and expense which the Owner may incur in making good any such default, thence this obligation shall be null and void; otherwise it shall remain in full force and effect.

PROVIDED, however, that no suit action or proceedings by reason of any default whatever be brought on his Bond after twelve months from the day on which the final payment under the Contract falls due.

PROVIDED, further that the said Surety, or Sureties, for the value received hereby stipulate and agree that no charge, extension of time or addition to the terms of the Contract or to the work to be performed thereunder of the Specifications thereof shall in any way effect their obligations on this bond, and they do hereby waive notice of such change, extension of time, alteration or addition to the terms of the contract, or to the work, or to the Specifications.

SIGNED, SEALED AND DELIVERED this _____ day of _____ 20 26 .

Individual Principals sign here

_____(SEAL)

In the presence of:

_____(Print)

_____(SEAL)

_____

_____(Print)

_____(SEAL)

_____

_____(Print)

(Corporate Name) Chris Brewer Contracting, Inc.

BY: _____

(Signature)

C.S. Brewer

(Print)

ATTEST: _____

(Signature)

Carson Brewer (Print)

ITS: President

(Title)

ITS: Secretary

(Title)

(Surety sign here) (Corporate name) Granite Re, Inc.

BY: _____

(Signature)

Christy Hicks

(Print)

ATTEST: _____

(Signature)

ITS: Attorney-in-Fact

(Title)

Jan Wright (Print)

ITS: Account Manager

(Title)

Corporate Seal

GRANITE RE, INC. CORPORATE SEAL MINNESOTA

GRANITE RE, INC.

GENERAL POWER OF ATTORNEY

Know all Men by these Presents:

That GRANITE RE, INC., a corporation organized and existing under the laws of the State of MINNESOTA and having its principal office at the City of OKLAHOMA CITY in the State of OKLAHOMA does hereby constitute and appoint:

SONYA D. BERRYMAN; LEN SKIPPER; FRANCIS WARE; CHRISTY HICKS for the following purposes, to wit:

To sign its name as surety to, and to execute, seal and acknowledge any and all bonds, and to respectively do and perform any and all acts and things set forth in the resolution of the Board of Directors of the said GRANITE RE, INC. a certified copy of which is hereto annexed and made a part of this Power of Attorney; and the said GRANITE RE, INC. through us, its Board of Directors, hereby ratifies and confirms all and whatsoever the said:

SONYA D. BERRYMAN; LEN SKIPPER; FRANCIS WARE; CHRISTY HICKS may lawfully do in the premises by virtue of these presents.

In Witness Whereof, the said GRANITE RE, INC. has caused this instrument to be sealed with its corporate seal, duly attested by the signatures of its President and Assistant Secretary, this 31st day of July, 2023.

Kenneth D. Whittington, President

Kyle P. McDonald, Assistant Secretary

STATE OF OKLAHOMA)
) SS:
COUNTY OF OKLAHOMA)

On this 31st day of July, 2023, before me personally came Kenneth D. Whittington, President of the GRANITE RE, INC. Company and Kyle P. McDonald, Assistant Secretary of said Company, with both of whom I am personally acquainted, who being by me severally duly sworn, said, that they, the said Kenneth D. Whittington and Kyle P. McDonald were respectively the President and the Assistant Secretary of GRANITE RE, INC., the corporation described in and which executed the foregoing Power of Attorney; that they each knew the seal of said corporation; that the seal affixed to said Power of Attorney was such corporate seal, that it was so fixed by order of the Board of Directors of said corporation, and that they signed their name thereto by like order as President and Assistant Secretary, respectively, of the Company.

My Commission Expires:
April 21, 2027
Commission #: 11003620

Notary Public

GRANITE RE, INC.

Certificate

THE UNDERSIGNED, being the duly elected and acting Assistant Secretary of Granite Re, Inc., a Minnesota Corporation, HEREBY CERTIFIES that the following resolution is a true and correct excerpt from the July 15, 1987, minutes of the meeting of the Board of Directors of Granite Re, Inc. and that said Power of Attorney has not been revoked and is now in full force and effect.

"RESOLVED, that the President, any Vice President, the Assistant Secretary, and any Assistant Vice President shall each have authority to appoint individuals as attorneys-in-fact or under other appropriate titles with authority to execute on behalf of the company fidelity and surety bonds and other documents of similar character issued by the Company in the course of its business. On any instrument making or evidencing such appointment, the signatures may be affixed by facsimile. On any instrument conferring such authority or on any bond or undertaking of the Company, the seal, or a facsimile thereof, may be impressed or affixed or in any other manner reproduced; provided, however, that the seal shall not be necessary to the validity of any such instrument or undertaking."

IN WITNESS WHEREOF, the undersigned has subscribed this Certificate and affixed the corporate seal of the Corporation this _____ day of _____, 2024.

Kyle P. McDonald, Assistant Secretary

GR0800-1

ITEM VII
INSURANCE

A. INDEMNIFICATION: CONTRACTOR shall indemnify, defend and hold harmless City and its officers, elected officials, agents, representatives, and employees in respect of any and all claims, injuries, losses, diminution in value, damages, liabilities, whether or not currently due, and related expenses (including without limitation, settlement costs and any legal or other expenses for investigating or defending any actions or threatened actions) arising from or in connection with CONTRACTOR'S performance under this agreement, including but not limited to, environmental laws, regulations, orders and decrees of whatever character or nature and damage or injury to persons or property. All certificates/endorsements shall be reviewed and deemed acceptable by the City's Risk-Management Office prior to any work.

B. Insurance: CONTRACTOR shall take out and maintain during the life of the contract the following:

Contractor shall name the City of Mobile as an additional insured.

1. Workers' Compensation/Employer's Liability:

a. Workers' Compensation insurance in the amounts required by all applicable laws, rules or regulations of the state of Alabama.

b. Employer's Liability with limits of not less than:

Bodily Injury by Accident	$1,000,000 each accident
Bodily Injury by Disease	$1,000,000 policy limit
Bodily Injury by Disease	$1,000,000 each employee

c. Borrowed Servant/Alternate Employer endorsement in favor of City of Mobile.

2. Comprehensive General Liability Insurance:

a. Comprehensive General Liability (occurrence form) including coverage for products/completed operations, independent contractors, blanket contractual liability specifically covering the obligations assumed by Contractor.

b. Limit of Liability: $1,000,000 combined single limit of liability each occurrence bodily injury or property damage.

c. General Aggregate Limit shall apply on a "Per Project" Basis.

3. Automobile Liability Insurance:

a. Automobile Liability Insurance to cover any auto, including all owned, non-owned, and hired vehicles, with a $1,000,000 combined single limit of liability each accident for bodily injury and/or property damage.

4. Excess/Umbrella Liability Insurance

a. Providing following form coverage for Employer's Liability, Comprehensive General Liability, and Automobile Liability.

b. Limit of Liability: $2,000,000 combined single limit of liability each occurrence for bodily injury and/or property damage.

5. Certificate of Liability Insurance Endorsement Page

The policy endorsements listed below are required and must be listed in the "Descriptions of Operations" box on the Certificate of Liability Insurance or listed separately on an attachment to the certificate of insurance (ACORD 101, Additional Remarks Schedule).

a. Waiver of Subrogation - All policies of insurance shall be endorsed to waive rights of subrogation in favor of City of Mobile.

b. Additional Insured - All policies of insurance, except Workers Compensation and Professional Liability Insurance, shall be endorsed to name City of Mobile as an Additional Insured.

c. Primary Insurance - All policies of insurance, except Workers Compensation and Professional Liability Insurance, shall be endorsed to provide that all such insurances are primary and non-contributing with any other insurance maintained by City of Mobile.

d. Notice of Cancellation - Certificates of Insurance shall provide that such insurance shall not be subject to cancellation, non-renewal nor material change without 30 days or more (except 10 days for non-payment) prior written notice thereof to the City of Mobile.

e. Certificates of Insurance - General – Within ten (10) calendar days from the date of issuance of Contract forms for execution, Contractor shall deliver to the City of Mobile, certificates of insurance (standard ACORD format) certifying the existence and limits of the insurance coverages along with separate policy endorsements as described above. Contractor shall also be responsible for delivering policy renewal certificates to the City of Mobile.

ITEM VIII
SPECIAL PROVISIONS

1. Subletting or Assigning of Contract:

(a) Limitations: The Contractor shall not sublet, assign, transfer, convey, sell or otherwise dispose of any portion of the contract, his right, title or interest therein, or his power to execute such contract, to any person, firm or corporation without written consent of the City and such written consent shall not be construed to relieve the Contractor of any responsibility for the fulfillment of the contract. Unless otherwise stipulated in the proposal or special provisions, the Contractor shall perform with his own organization, and with the assistance of workmen under his immediate supervision and reported on his payroll, all contract work of a value not less than 50 percent of the total contract amount, except that any items designated in the contract as "Specialty Items" may be performed by subcontract, and the cost of any such "Specialty Items" so performed by subcontract may be deducted from the total contract amount before computing the amount of work required to be performed by the Contractor, with his own organization.

(b) Subcontractor's Status: A subcontractor shall be recognized only in the capacity of an employee or agent of the Contractor, and the Contractor will be responsible to the City for all subcontractors' work, including failures or omissions; and his removal may be required by the PSA Director, as in the case of an employee.

2. The contractor shall not sublet the contract on any portion thereof without written permission from the PSA-PM. If consent is given, the contractor will be permitted to sublet a portion of the work, but shall perform with his own organization, work amounting to not less than fifty (50%) percent of the total contract price. The performance of the contract may not be assigned.

3. The City PSA Department reserves the right to disqualify or refuse to award the contract to a prospective bidder for the following reasons:

(a) Uncompleted work which, in the judgment of the City PSA Department, might hinder or prevent the prompt completion of additional work if awarded.

(b) Failure to pay or satisfactorily settle all bills due to labor and material on former contracts in force at the time of issuance of proposals.

(c) Default, as defined in Article 108.12 of the Alabama Department of Transportation Standard Specifications for Highway Construction, 2018 Edition, with all latest additions and modifications of the PSA and Engineering Departments for the City of Mobile under a previous contract, or unsatisfactory work of any nature on previous work. In addition to the above, disqualification for unsatisfactory progress of an on-going contract will be administered as outlined in Subarticle 108.04(c) Alabama Department of Transportation Standard Specifications for Highway Construction, 2018 Edition, with all latest additions and modifications of the PSA and Engineering Departments for the City of Mobile. Disqualification applies to bidding as a prime contractor or doing any subcontract work for a prime contractor.

(d) The Owner reserves the right to reject any Bidder who has previously failed to perform properly or complete on time contracts of similar nature, or a bid of a bidder who is not, in the judgment of the Owner, in a position to perform the Contract.

4. The successful bidder shall make every reasonable effort to have at least fifteen (15%) percent of the total value of the contract performed by socially and economically disadvantaged individuals. A City of Mobile DBE Compliance Form must be submitted with the bid documents. Contractors will be required to submit a City of Mobile DBE Utilization Report with each invoice and with final closeout documents. Failure to meet the committed DBE percentage without documented good-faith effort shall constitute a material breach and may result in withholding of retainage or future bid disqualification.

5. It is the intent to construct the within described work as shown on the plans and specifications prepared by the PSA Department of the City of Mobile in accordance with the Alabama Department of Transportation Standard Specifications for Highway Construction, 2018 Edition, with all latest additions and modifications of the Engineering and PSA Departments for the City of Mobile.

6. In said specifications, where the words State of Alabama, Governor, State, State Highway Department, Director, etc. appear substitute City of Mobile acting by and through its Mayor.

7. All insurance and bonds must be furnished by a Surety licensed to do business in the State of Alabama, signed or countersigned by a licensed Resident Agent of Alabama and have a minimum rating of A Class VI as reported in the latest issue of Best's Key Rating Guide Property and Casualty.

8. Payment for any work incidental to the completion of this contract, for which no item was set up, shall be absorbed in other bid items.

9. The City of Mobile reserves the right to add to or reduce quantities or delete any item or items in this contract without any adjustment in unit price. Additional items of work necessary for the completion of this contract may be added by Change Order.

10. Failure to complete the work in this contract within the time stipulated will result in a deduction for money due the contractor. Such liquidated damages will be assessed as provided for in Item 108 of the Alabama Department of Transportation Standard Specifications for Highway Construction, 2018 Edition, with all latest additions and modifications of the PSA and Engineering Departments for the City of Mobile.

11. **Beginning from payment for each task order, the contractor shall provide maintenance for a period of one year for work on that task order. This maintenance work shall include furnishing all materials, labor, and incidentals necessary to maintain the project in acceptable condition as determined by the City PSA Department. This maintenance for a one-year period shall be provided with no additional compensation. A maintenance guarantee may not be required for**

specific task orders, depending on the nature of the work and upon the discretion and written agreement of the PSA-PM.

12. The City of Mobile may retain a reputable laboratory to make all tests, inspections, etc. required by the Alabama Department of Transportation Standard Specifications for Highway Construction, 2018 Edition, with all latest additions and modifications of the PSA and Engineering Departments for the City of Mobile at no cost to the contractor. The laboratory shall furnish copies of all test results to the PSA-PM. The Contractor shall coordinate activities with the City's Testing Laboratory.

13. The successful bidder will be required to submit mix designs to comply with Item 424-A, based on the State of Alabama Highway Department Standard Specifications for Highway Construction, 2006 Edition, with all latest additions and modifications of the PSA and Engineering Departments for the City of Mobile, to the PSA Department and to the City's Testing Lab for approval.

14. Any asphalt used on the project shall have an approved mix design and shall not contain shingles (RAS).

15. The Contractor shall have on the job site at all times, as his agent, a competent English-speaking superintendent capable of reading and thoroughly understanding the plans and specifications and thoroughly experienced in the type of work being performed, who shall receive instructions from the PSA-PM or his authorized representatives. When the Contractor's work force is divided between two (2) or more sites, a qualified English-speaking superintendent shall be present at each site. The Superintendent shall have full authority to execute orders or directions of the PSA-PM without delay and to promptly supply such materials, equipment, tools, labor and incidentals as may be required. The Superintendent shall be responsible for the progress of the work and the conduct of the Contractor's personnel. Joint venture Contractors shall have one such superintendent for all ventures. Such superintendents shall be furnished irrespective of the amount of work sublet and shall have full authority over all subcontract work. The superintendent shall be required to have direct communication with the supplier, in case of mechanical failure at the site or the plant, and he shall have a means with which to be contacted on-site by the CITY.

16. The contractor shall take all necessary precautions for the protection of the work and safety and comfort of the general work. Such work shall comply with applicable spec sections of Items 104 and 107. There will be no compensation for this work.

17. The quantities shown on the proposal and plans are approximate. The Contractor will be paid only for the amount of each item to complete the project.

18. It will be the Contractor's responsibility to determine the exact location of all existing utilities, whether public or private, and make the necessary adjustments as required to construct the project. Prior to construction, the Contractor shall notify all utility companies to obtain information on locations, depths, etc. of their utilities. The utility companies, directed by the PSA-PM unless provided for in this contract, shall undertake any relocation and/or adjustments of utilities. The Contractor shall cooperate with the

utility companies and provide assistance in excavation for such adjustments and relocation work, if requested. This work will be paid for under the appropriate items of work for excavation and borrow.

If any private utility line, including but not limited to irrigation lines, are encountered within the right-of-way, it is the Contractor's responsibility to make the necessary adjustments of said facilities and coordinate with the property owner or private company. Such adjustments are considered incidental to the project (no said pay item).

19. It shall be the Contractor's responsibility to determine if the required construction can be performed within the area provided and comply with requirements of the Occupational Safety and Health Regulations (OSHA) for construction projects of this type. Any safety measures or methods of construction that are necessary in the construction of this project to comply with these regulations are the Contractor's responsibility and shall be provided with all costs to be included in the various pay items of the contract (no direct payment).

20. The Contractor shall submit a Traffic Control Scheme for the City Traffic Engineer's approval prior to commencement of any work on this project. The scheme shall be in full compliance with all the provisions and requirements as designated in Item 740 and Article 104.04 of the Standard Specifications, the Federal MUTCD Manual, Current Edition, and other requirements set forth by the Traffic Engineer. Payment for items in Section 740 shall be full compensation for all materials, signage, lights, hardware, drums, equipment, labor, handling and maintenance until project completion and any other incidentals necessary to complete the job. The Contractor shall restore existing traffic mechanisms to original condition.

21. All equipment shall be in good mechanical working order. If not, the Project Inspector can require removal from the project.

22. The Contractor at no direct payment will support any utilities encountered during construction, requiring support. Contractor is responsible for securing and supporting all utilities located adjacent to or within the limits of excavation. The cost associated with this work will be a subsidiary obligation of clearing & grubbing (no direct payment).

23. Maintenance roads, haul roads, laydown yards, staging areas, and detours constructed for the Contractor's use and convenience, shall be constructed at the Contractor's expense, and shall be absorbed in other bid items. All construction entrances to the site of work shall have aggregate surfacing placed over filter fabric for a minimum of fifty (50) linear feet from the adjacent connecting roadway, by an appropriate width, in an effort to minimize the transportation of sediment onto existing roadways. All areas shall be restored to their preconstruction condition after project completion. Any traffic control required to complete such repairs shall be in accordance with Federal MUTCD manual, Latest Edition and at no cost to the Owner.

24. Any damage caused by the Contractor or his subcontractors to the existing bituminous asphalt surface and/or base structure on local streets leading to or associated with this project, as determined by the PSA-PM or Owner, shall be repaired by the Contractor at no cost to the owner.

25. It shall be the responsibility of the contractor to provide a substantial stand of grass at the time of the Final Inspection. Any sod that is not living and/or viable in the opinion of the PSA-PM shall be replaced at no additional cost to the project. The Contractor shall provide a one-year warranty period from the time of final payment.

26. Contactor shall remove and dispose of all waste and unsuitable material, from the project site. The Contractor will be held responsible for disposal of debris and construction materials in an appropriate manner and at an approved, permitted location. The Contractor will be responsible for compliance with applicable laws or ordinances regarding material type and disposal site. **Disposal of construction materials and debris is specified in Subarticles 206.4(c) and 201.03(d) of the Standard Specifications.**

    The Contractor will submit a plan for the disposal of construction materials, indicating proposed disposal location, type of debris and quantity of material. PSA-PM staff will monitor the disposal of construction materials for compliance with applicable laws and ordinances. There will be no additional compensation for disposing of such material off the project site.

27. All salvageable material from the project shall be stored on the project at locations designated by the PSA-PM. Any material not wanted by the City of Mobile shall be the property of the Contractor and removed from the project. There will be no direct payment for removing and storing the salvageable materials, nor removing unwanted materials from the project.

28. Existing excavated material suitable for use as backfill, embankments, etc. shall be used on the project at no direct payment. Additional material required and compaction of the additional fill material shall be paid for under Item 210-D and Section 306.03 of the Standard Specifications.

29. Existing topsoil material suitable for use on the project shall be stockpiled and utilized at no direct payment. Additional topsoil required shall be paid for under Item 650-A, as designated in the Standard Specifications and will be measured by Truck Bed Measurement.

30. **All water and sanitary sewer work shall comply with the Mobile Area Water and Sewer System (MAWSS) Standard Specifications, latest edition. All MAWSS work, whether by prime or subcontractor, shall be accomplished by an experienced contractor, familiar with MAWSS construction and specifications. The PSA-PM may require the Contractor to provide necessary documentation explaining such experience before permission to accomplish work is granted.**

31. The project site shall be kept clean at all times. Loose dirt, materials, excavation, etc. shall be kept cleared from streets, walks, ditches, etc. The Owner reserves the right to demand that the Contractor's forces be diverted to clean up whenever conditions warrant such diversion. Diversion of Contractor's forces will not entitle the Contractor to any extension of time or additional compensation.

32. The contractor shall take whatever steps are necessary to ensure that dust is controlled during operations.

33. If provided in the Bid Schedule, accepted Concrete Combination Curb and Gutter, as designated in the Standard Specifications, will be measured in linear feet, complete, in place, along the base of the curb face. Measurement for payment will not extend across driveways or inlets.

34. If provided in the Bid Schedule, mix design for Improved Concrete Wearing Surface, Item 424A, shall be based on the Alabama Department of Transportation Standard Specifications for Highway Construction, 2022 edition. The successful bidder will be required to submit mix designs to comply with Item 424A, based on the Alabama Department of Transportation Standard Specifications for Highway Construction, 2022 Edition, with all latest additions and modifications of the PSA and Engineering Departments for the City of Mobile, to the City's Testing Lab for approval.

35. The Contractor, at no cost to the Owner, shall replace any existing survey monument or property corner that is damaged during construction.

36. Project Documentation: Prior to the start of construction, the **Contractor** shall document any features or items of interest or importance by the use of photography and/or videotapes. At least two (2) copies of video and/or photos shall be made for each Task Order. PSA-PM shall retain one set. Prints and/or tapes shall be delivered to the PSA-PM within one week after they are made.

37. New pipe is to be videoed before acceptance by the City of Mobile. No pay item provided. Cost is considered incidental to the Project. Video must be submitted to the PSA-PM before final payment is rendered.

38. It is the sole responsibility of the Contractor to protect his/her equipment. The owner or the PSA-PM shall not entertain any claims by the Contractor due to any damage to his or her equipment or materials.

39. The Contractor shall notify property owners prior to construction. The Contractor shall provide documentation to the PSA-PM that this has been accomplished. Notifying property owners is considered incidental to the project.

40. The relocation of signs and mailboxes shall be considered a subsidiary obligation of the project.

41. Any damage to private property beyond the limits required to repair/maintain the storm drain system, roadway, sidewalk, curbing, etc., as determined by the PSA-PM, shall be repaired at the Contractor's expense.

42. The Contractor shall use extreme caution when working in close proximity to existing houses or other structures. Any damage to the existing structures from the Contractor's negligence shall be repaired at the Contractor's expense. The Contractor shall be very

cautious of existing landscaping items located within the project area and shall coordinate with property owners regarding landscaping items to be removed. Any damage to existing items not scheduled to be removed shall be replaced at the Contractor's expense.

43. All pipe joints shall be wrapped to City of Mobile specifications. Pipes shall not have lifting holes.

44. There shall be **NO** adjustment to fuel or asphalt index for this project.

45. The contractor shall be responsible for implementing and maintaining any and all necessary environmental control measures in accordance with all Local, State, and Federal laws and requirements. This includes protection from any construction related activities. Any and all fines assessed to the project resulting from the negligence of the Contractor will be the sole responsibility of the Contractor. There will be no direct payment for the materials, equipment, labor or other incidentals needed to fulfill this requirement. It shall be subsidiary of Item No. 600-A, Mobilization.

46. The Contractor shall provide, install and maintain all temporary erosion control measures shown on the drawings. Wattles, hay bales, silt fences and other approved erosion control devices shall be installed by the Contractor and shall be maintained throughout the course of this project. Adjustments to the methods and types of erosion control will be necessary during the course of the construction, and it will be the responsibility of the Contractor to provide, install and maintain these as well. The PSA-PM shall approve methods of erosion control. It will be the responsibility of the Contractor to satisfy the City and himself that all Federal, State and Local Codes and Ordinances are abided by at all times during construction. Additionally, the Contractor shall implement any and all other Best Management Practices applicable per Federal, State, County and Municipal laws concerning water pollution.

47. The Contractor shall be responsible for implementing all erosion control BMPs on City construction projects and for all sediment within and leaving the construction site until the project is accepted by the City. Severe penalties will be imposed to ensure compliance.

48. All projects and construction sites shall be in accordance with the Clean Water Act; the Alabama Water Pollution Control Act; the current version of the Alabama Handbook for Erosion Control, Sediment Control and Stormwater Management on Construction Sites and Urban Areas; current version of the Mobile, Alabama City Code Chapter 17 Stormwater Management and Flood Control.

    Any fines, penalties, or judgments accessed to City of Mobile, its agents or representatives due to inadequately installed or maintained erosion control shall be the responsibility of the Contractor. The Contractor shall indemnify and hold harmless the PSA-PM, City of Mobile, its agents or representatives from all claims resulting, all or in part, from inadequately installed or maintained erosion control.

49. The Contractor shall be required to have an 8 – 10 Ton Steel Wheel Roller that has all the mechanical parts working properly. In addition, a backup 8 – 10 Ton Steel Wheel roller

in case of breakdown so as not to interrupt the continuous placing of asphalt. The tack truck shall, at all times during working hours, have the tack heated to a temperature suitable for placing. The spreader will be required to have all mechanical parts working properly. Mechanical parts are defined as hydraulics, tamper bars, burners, etc. A backup spreader shall be readily available so as not to interrupt the continuous placing of asphalt in case of breakdown.

50. Working hours on certain streets may be limited. All working times, closures, etc., will be coordinated with the City of Mobile Traffic Engineering Department.

51. Workmen shall wear reflectorized vests, shirts or jackets.

52. The Contractor shall not commence with milling, tacking, resurfacing, or striping until all vehicles are removed from the street.

53. At intersections, driveways, and all turnouts, the City Project Inspectors and/or its PSA-PM shall determine the limits to mill and resurface. The Contractor shall ensure that the asphalt surface meets the elevation at the gutter so as to facilitate drainage, sidewalk ramp construction, and ADA compliance.

54. Tack coat shall be emulsified asphalt grade CRS-2, CRS-2h, CSS-1, CSS-1h, CQS-1h, or CQS-1hp, or one of the Performance Graded Asphalt Binders shown in Article 804.07 in accordance with requirements of Section 405 of the State of Alabama Highway Department Standard Specifications for Highway Construction, 2018 Edition, with all latest additions and modifications of the PSA and Engineering Departments for the City of Mobile.

55. Contractor shall use a mechanical broom with blower in operating condition for cleaning streets prior to tacking and resurfacing operations.

56. On some streets, a "ski pole" will be required to insure the correct grade on the street. This will be done at the discretion of the Project Inspector.

57. All temporary stop work joints shall be made using paper. At the beginning of the next work day the contractor shall make every effort to make a joint that will conform to the existing road surface.

58. Prior to resurfacing, the water and sewer manholes and valve covers will be raised by Mobile Area Water & Sewer System. The contractor will make every reasonable effort to make sure the manholes and water valves are exposed after resurfacing is completed.

59. All traffic control configurations shall be restored to their original patterns, unless otherwise directed by the Traffic Engineering Director.

60. All resurfaced streets shall require blue fire hydrant raised markers to be installed to help identify fire hydrant locations. Blue pavement markers are installed in the middle of the travel lane adjacent to a fire hydrant location. In cases where the fire hydrant is located at the corner of an intersecting street, a blue pavement marker is installed on both streets.

61. OMIT

62. The CONTRACTOR will prepare an estimate once each month for work completed. The contractor will send the PSA-PM a copy of his estimate figures for the month. Contractors will be required to submit a City of Mobile DBE Utilization Report with each invoice and with final closeout documents.

63. Tack coat shall be applied prior to placement of asphalt per ALDOT Section 405. There will be no direct payment for this work. It shall be absorbed in other items of work. Only trackless tack shall be allowed on this project.

64. Gutter cleaning will be a subsidiary obligation of 424A Superpave Bituminous Concrete Wearing Surface.

65. All permanent striping on the final surface that is required to be removed shall be removed by hydraulic means only or as directed by the PSA-PM.

ITEM X
SUPPLEMENTAL SPECIFICATIONS

Alabama Department of Transportation Standard Specifications for Highway Construction, 2018 Edition, shall be amended as follows:

1. PARAGRAPH 105.06(b) *CONTRACTOR'S SUPERINTENDENCE AND SUPERVISION* SHALL BE **AMENDED TO INCLUDE** THE FOLLOWING:

    a. If requested by the PSA-PM, Contractor shall provide resume or other information necessary to ensure that project superintendent is experienced in drainage work and associated work items. At the request of the PSA-PM in writing with concurrence of the City of Mobile, Contractor shall immediately remove any superintendent or other employee whose lack of experience, conduct or inability to effectively communicate in the English language is detrimental to the project. Said removal shall not be cause for claim against PSA-PM, City of Mobile or their agents.

    b. In the event that additional engineering or construction administration effort is required due to personnel changes required in accordance with paragraph A or solely initiated by the Contractor, the CITY shall be reimbursed by the contractor for such additional effort at the prevailing hourly rates as determined by the PSA-PM.

    PSA-PM shall provide Contractor a minimum of 48 hours' notice prior to initiating additional effort charges, clearly stating the reasons for such charges and notifying the Contractor of necessary steps or corrective actions to avoid additional effort charges.

    Proper corrective action taken within 48 hours by the Contractor shall void additional engineering/inspection fee charges.

    No corrective action by the Contractor shall initiate additional engineering/inspection fees retro-active to date of contractor notification.

2. ITEM 108.01 *SUBLETTING AND ASSIGNMENT (a);* PARAGRAPH 1 *LIMITATIONS* SHALL BE **AMENDED TO INCLUDE** THE FOLLOWING:

    The PSA-PM reserves the right, with approval from the CITY PSA DIRECTOR, to disapprove or disqualify a Subcontractor that has exhibited or participated in fraudulent activities either as a prime Contractor or a Subcontractor under a previous contract administered by the CITY. Furthermore; the PSA-PM may require a list of references from local Contractors, Project Engineers or Government Agents in order to verify past performances, capabilities and competency before acceptance of the Subcontractor is granted.

3. SECTION 109, SUB-SECTION 109.07 *PARTIAL PAYMENT* SHALL BE **REPLACED** WITH THE FOLLOWING:

Once each month the CONTRACTOR will make an appropriate estimate on the regulation form of the work or portion of the work completed and the value thereof based on the contract Unit Prices, or proportional part thereof for Lump Sum items, less retainage or any assessed liquidated damages or other designated deductions.

The payment of any monthly estimate for any portion of the work as provided in the Specifications shall in no way affect the obligation of the Contractor to complete the work in accordance with the contract. Payment of any monthly invoice will not be made until such time as all records and forms are completed and submitted.

Payment for stored materials may be included on the monthly estimates only if approved in advance by the CITY. Payment for stored materials will be at the discretion of the CITY.

4. SECTION 210, PAY ITEM 210A *UNCLASSIFIED EXCAVATION*; PAY ITEM 210D *BORROW EXCAVATION. STRUCTURE FILL (A-2-4 OR BETTER)*: PAY ITEM 210E *BORROW EXCAVATION STRUCTURE*, SUB-SECTION 210.09 METHOD OF MEASUREMENT SHALL BE **REPLACED** WITH THE FOLLOWING:

Unit of Measurement for all accepted Excavation shall be by the cubic yard truck bed measure. The accepted volume of Excavation shall be based on certified delivery tickets as determined by truck bed measure.

5. ITEM 246 GABIONS

246.01 DESCRIPTION

The work under this Section shall consist of furnishing assembling, tying and filling with approved stones, open PVC coated welded wire baskets, construction in accordance with these specifications and placed in reasonably close conformity to the lines, grades and dimensions shown on the plans or directed by the PSA-PM. Other work specified in this section shall include furnishings and placing geotextile fabric between the backfill material and the inner face of the gabions.

246.02 MATERIAL

(a) Filter Blanket

Filter Blanket shall be a woven material meeting the requirements of Subarticle 814.03 (c).

(b) Stone Fill

Stone used in the gabions shall be sound and durable, from any source approved by the PSA-PM. No stone shall be less than three inches, minimum dimension, nor

greater than six inches. The stone shall be crushed and shall be reasonably well graded between the limiting sizes.

(e) Gabion Baskets

PVC coated galvanized steel wire gabion basket units shall be of non-raveling construction, fabricated from a welded square wire mesh of hot dipped galvanized steel wired having a minimum diameter of 0.105 inches after galvanization; and additionally, shall be coated with a minimum of 0.020 inches of PVC. The steel wire used shall be galvanized and PVC coated prior to fabrication into mesh. Mesh openings shall be square in shape and uniform in size, measuring not more than 3 inches by 3 inches. The PVC coated wire of all gabion components shall be resistant to the destructive effects of immersion in acidic, salt, or polluted water, exposure to ultraviolet light and abrasion, and retain these characteristics after a period of not less than 3,000 hours under test in accordance with ASTM Test Designation G-23.

Gabions shall be fabricated in such a manner that the sides, ends, lid, and diaphragms can be assembled at the construction site into rectangular baskets of the sizes specified by the plans. Gabions shall be of single unit construction. The base, lid, ends, and sides shall be either woven into a single unit or one edge of these members connected to the base section of the gabion in such a manner that strength and flexibility at the point of connection is at least equal to that of the mesh.

The field connections between adjacent wire baskets shall be made as recommended by the manufacturer and shall develop a connection strong enough that the failure under test shall occur in the mesh rather than in the lacing.

Each shipment of gabions to a job site shall be accompanied by a certification, on company letterhead, and signed by an officer of the company, which states that the material conforms to the requirements of the contract specifications and ASTM designation A974-97 manufacturing requirements.

The PSA-PM reserves the right to modify any portion in order to enhance the final product.

(f) Grout

Grout shall consist of Portland cement concrete. Concrete shall conform to the requirements of ASTM C-94 and shall have a minimum compressive strength of 3,000 psi, a maximum nominal aggregate size of ¼ inch, and sufficient admixture to provide from 5 to 7 percent entrained air. At the Contractor's option, a water-reducing admixture, proportioned as per the manufacturer's recommendation, may be used to increase the penetration of the grout. The grout shall be designed to produce a mixture having a consistency such as to permit gravity flow into the interstices of the stone-filled gabion baskets with the help of limited brooming and vibrating. The grout shall be used in the work within a period of one (1) hour after mixing. Retempering of grout will not be permitted. Gabions baskets shall not be grouted when the ambient temperature is below 35 degrees F. or above 89 degrees

F., unless approved by the PSA-PM in writing; nor when the grout, without special preparation, is likely to be subjected to freezing temperatures before final set has occurred. Prior to grouting, all surfaces of the gabion baskets shall be wetted. The gabion baskets shall be grouted in successive longitudinal strips, approximately ten (10) feet in length, commencing at the furthest in-channel edge and working back towards the top-of-bank. Each batch of grout shall be dumped onto the ungrouted part of the strip and worked in to the voids between the stones. Grout shall be brought to the place of final deposit by approved means, and in no case will grout be permitted to flow on the gabion basket surface a distance in excess of ten (10) feet. Immediately after dumping the batch of grout, it shall be distributed over the surface of the strip by the use of brooms, and the grout worked into place between stones with suitable spades, trowels or vibrating equipment. The grout shall penetrate the gabion basket surface to provide a cap having a thickness of not less than six (6) inches. As a final operation, a stiff stable broom shall be used to give the grout cap a broomed finish; however, the wire of the gabion shall not be uncovered during the finishing operation. After completion of any strip as specified, no workman or any load shall be permitted in the grouted surface for at least twenty for (24) hours.

The surface of all grouted gabion baskets shall be cured by keeping the surface continuously wet for a period of not less than seven (7) day; during which time the grouted surface shall also be protected from flowing water and mechanical injury.

246.03 CONSTRUCTION REQUIREMENTS

(a) Excavation & Backfill

Excavation and backfilling for gabion shall be performed in accordance with Section 214.

(b) Filter Blanket

Filter Blanket (geotextile) shall be installed in accordance with Section 610.

(c) Gabion Assembly and Installation

Gabion baskets shall be assembled in such a manner that the sides, ends, lids and diaphragms can be assembled at the construction site into rectangular baskets of the sizes specified and shown on the drawings. Gabions shall be divided into cells by diaphragms of the same mesh and gauge as the gabion body. Diaphragms shall be placed a three-foot (3') nominal spacing in the long direction, and shall extend the full width and height of the basket. The gabions shall be furnished with the necessary diaphragms secured in proper position on the base in such a manner that no additional tying at this juncture will be necessary. All perimeter edges of the mesh forming the gabion shall be securely fastening all diaphragms and edges of the gabion.

Empty gabion baskets shall be installed according to manufacturer's recommendations and to the details shown on the plans. They shall be individually

placed on the approved surface to the lines and grades as shown on the drawings or as directed by the PSA-PM, with the sides, ends and diaphragms erected in a manner that will insure that correct position of all creases and that the top of all sides are level. All adjoining empty gabion units must be connected by tie wire lacing along the perimeter of their contract surfaces in order to obtain a monolithic structure.

The initial line of basket units shall be placed on the prepared bedding layer surface in a direction parallel to stream flow, unless otherwise shown on the drawings, and shall be partially filled with stones by hand to provide anchorage against deformation and displacement during the remainder of the filling operation. Stone filling operations shall carefully proceed with placement by hand or machine so as not to damage any galvanize or PVC wire coating, to assure a minimum of voids between the stones, and to assure that maintenance of alignment throughout the filling process. Undue bulging of the mesh shall be avoided. Along all exposed faces, the outer layer of stones shall be carefully placed and arranged by hand to ensure a neat and compact appearance. Where shown on the drawings or as directed by the PSA-PM, or where a complete gabion unit cannot be installed because of space limitations, the basket unit shall be cut, folded and wired together to suit existing site conditions. The mesh must be cleanly cut and the surplus mesh cut out completely or folded back and neatly wired to an adjacent basket face.

(d) Grouted Gabions

Gabions installed as specified herein shall be grouted in areas indicated on the drawings or directed by the PSA-PM. All grouting of gabions shall be done in-the-dry. Stone for grouted gabion baskets shall conform to the requirements specified hereinbefore. The stone shall be placed in conformance with the general requirements for ungrouted gabion basket units as specified hereinbefore. The Contractor shall take special care to maintain the surface of the gabion units free from becoming choked with any material, such as spilled bedding material, until grouted, so as not to hamper the penetration of the grout. If such choking does occur, the Contractor shall remove the contaminating material to a minimum depth of 6 inches prior to grouting.

(e) Stone Filled Voids

Irregular shaped areas in the ditch sides not conforming to an area that will accommodate a gabion basket shall be filled with stones in the manner specified for gabion and grouted. NO DIRECT PAYMENT.

246.04 METHOD OF MEASUREMENTS

The quantity of Gabions will be field measured along the channel face of the gabion baskets and shall be paid for at the contract unit price per linear foot for Item 246-A. Linear foot price bid shall include all costs associated with temporary sheet pile shoring in addition to furnishing all the quantity of gabions and stone filled voids filled with stone ordered and acceptably placed.

Excavation and backfill of gabions will be paid for as specified in Item 210-B Channel Excavation.

246.05 BASIS OF PAYMENT

(a) Unit Price Coverage

The quantity of gabions or stone filled voids acceptably placed, measured as noted above, will be paid for at the contract unit price bid, which shall be full compensation for furnishing all materials, including filter fabric, wire mesh and stone, labor, equipment, tools, and incidental necessary to compete this Item of work.

(b) Payment Will be Made Under Item No:

246-A Gabions – per Cubic Yard
246-E Grout for Gabions – per Cubic Yard

6. OMIT

7. ITEM 618D *HANDICAP RAMPS* (TYPE(S) A, B, C, D, E):

618.D.01

Description
This section shall include the work of furnishing, installing, and finishing as required, handicap ramps at locations as required in the plans or as directed by the PSA-PM

618.D.02

Materials
Materials shall conform to Section 618 of the 2018 ALDOT Standard Specifications for Highway Construction.

618.D.03

Basis of Payment
Payment will be based on the respective unit bid price for handicap ramps, complete-in-place according to plan details which shall be payment in full for hauling, preparation, placing, and maintenance as required and for all labor, equipment, tools, and incidentals necessary to complete this item. Truncated Domes required for handicap ramps shall be paid for separately under Pay Item No. 618-E and are not included in Pay Item 618-D.

8. ITEM 618E *REGULAR AND MODIFIED TRUNCATED DOME INSERT FOR NEW OR EXISTING HANDICAP RAMPS:*

618.E.1

Description

This section shall include the work of furnishing, installing, cutting and anchoring Truncated Dome Inserts in new and existing handicap ramps.

618.E.2

Materials
Truncated Dome Inserts shall be Armor Tile ATR 2448 for New Construction or Armor-Tile ADA-S 2448 for existing construction. Color Colonial Red, Federal Color Number 20109, or approved equal, Truncated Domes shall be 24" wide and shall extend across the **full** width of the ramp. Domes shall have a mechanism for anchoring insert into concrete that allows easy removal and replacement.

618.E.3

Basis of Payment
Payment will be based on the respective unit bid price and shall be payment in full for furnishing, installing, cutting or modification including all labor, equipment, tools and incidentals necessary to complete this item.

Where installation of multiple Truncated Domes require cutting, payment will be made for each complete Truncated Dome Insert used in the installation.

9. ITEM 623B125 *HAULING FROM CITY STOCK PILE AND INSTALLATION OF GRANITE CURB (INCLUDING CUTTING AND FITTING):*

623.B125.1

Description
This section shall include the work of hauling, cutting and installing of granite curb from City stockpile.

623.B125.2

Basis of Payment
Payment will be based on the respective unit bid price and shalt be payment in full for hauling, installing, cutting or modification including all labor, equipment, tools and incidentals necessary to complete this item.

10. ITEM 623B126 *REMOVAL AND REINSTALLATION OF GRANITE CURB (INCLUDING CUTTING AND FITTING)*:

623.B126.1

Description
This section shall include the work of removing, stockpiling, reinstalling, cutting and fitting of granite curb.

623.B126.2

Basis of Payment
Payment will be based on the respective unit bid price and shall be payment in full for removing, stockpiling, reinstalling, cutting or modification including all labor, equipment, tools and incidentals necessary to complete this item.

11. ITEM 623B127 *REMOVAL AND REINSTALLATION OF SLATE TILES*:

623.B127.1

Description
This section shall include the work of removing, stockpiling, and reinstalling slate tiles.

623.B127.2

Basis of Payment
Payment will be based on the respective unit bid price and shall be payment in full for removing, stockpiling, reinstalling, grouting, cutting or modification including all labor, equipment, tools and incidentals necessary to complete this item.

12. SECTION 650, PAY ITEM 650A *TOPSOIL*: SUB-SECTION 650.04 *METHOD OF MEASUREMENT* SHALL BE **REPLACED** WITH THE FOLLOWING:

Unit of Measurement for all accepted TOPSOIL shall be by the cubic yard truck bed measure. The accepted volume of TOPSOIL shall be based on certified delivery tickets as determined by truck bed measure.

13. ITEM 654A *SOLID SODDING*:

654.A.1

Description
This pay item shall include all labor, tools, equipment and materials necessary to provide, on the project site, solid sodding. It is the responsibility of the Contractor to determine the type of sod present and replace in kind.

654.A.2

Basis of Payment
Payment will be based on the respective unit bid price for solid sodding, complete-in-place, which shall be payment in full for furnishing the individual solid sodding, for hauling, preparation, placing, and maintenance (incl. watering) of the solid sodding and for all labor, equipment, tools and incidentals necessary to complete this item.

14. ITEM 690D *DEWATERING*

690.D.01

Description
This pay item shall include all labor and maintenance necessary to provide dewatering, regardless of nature, for the duration of one day

690.D.02

Basis of Payment
Payment will be based on the respective unit bid price for dewatering, complete-in-place, which shall be payment in full for hauling, preparation, tools, and incidentals necessary to complete this item.

15. ITEM 740A. *TRAFFIC CONTROL:*

740 A.1

Description
This section shall include the work of furnishing, installing, relocating, re-installing and maintaining Construction Signs, Drums, Cones and Weights as required to maintain traffic and to provide a safe work zone, including sign post and portable supports as necessary.

740 A.2

Materials
All materials shall conform to the appropriate Section of the 2018 ALDOT Standard Specifications for Highway Construction.

740 A.3

Basis of Payment
Payment will be based on the respective unit bid price and shall be paid in full for all labor, materials, equipment, tools, transporting, installing, removal, re-installing and all incidentals necessary to complete this item.

18. ITEM 999X *WORK OF A SIMILAR NATURE UTILIZING BID ITEMS AND UNIT PRICES TO BE DETERMINED BY CITY PROJECT MANAGER:*

Description

This section specifies administrative and procedural requirements governing handling and processing work of similar nature utilizing bid items and unit prices to be determined by PSA-PM. This has been established in lieu of additional requirements and to defer selection of actual materials and equipment to a later date when additional information is available for evaluation.

Materials

All materials furnished for use shall comply with the appropriate requirements of the Alabama Department of Transportation Standard Specifications for Highway Construction, 2018 Edition or as specified by the PSA-PM or the City of Mobile.

Construction Requirements

The equipment used for the installation of this item of work shall be approved by the PSA-PM prior to beginning work on this pay item.

Method of Measurement

All work shall be measured, complete in place, in accordance with the appropriate section of the Alabama Department of Transportation Standard Specifications for Highway Construction, 2018 Edition or as specified by the PSA-PM or the CITY PSA DIRECTOR.

Basis of Payment

a. UNIT PRICE COVERAGE.

The item of Work of Similar Nature Utilizing Bid Items and Unit Prices to be Determined by City Project Manager, measured as noted above, will be paid for at a percentage of the contract lump sum price bid. This percentage will be calculated as follows:

$$\frac{\text{Value of work performed (in dollars)}}{\text{Lump sum value of pay item (in dollars)}} = \text{Amount Payable (in percent)}$$

b. PAYMENT

Payment shall be made under Item No. 999X000, Work of Similar Nature Utilizing Bid Items and Unit Prices to be Determined by City Project Manager – per lump sum.

19. SECTION 999A *SEDIMENT REMOVAL FOR DITCH CLEANING*

Description

This section shall include all equipment, labor and any other items necessary to provide sediment removal from ditches, regardless of nature, for the duration of one day.

Construction Requirements

The use of these pay items, and the work associated therewith, shall be approved by the PSA-PM prior to beginning work on these pay items. Sediment removal from ditches must be listed in the assigned task order, and planned work activities must be coordinated with the PSA-PM.

Basis of Payment

Payment will be based on the respective unit bid prices for sediment removal for ditch cleaning, which shall be payment in full for hauling, preparation, tools, and incidentals necessary to complete this item. Payment for sediment removed from ditches will not be included in Pay Item 210A Unclassified Excavation. Payment for all work associated with sediment removal from ditches will only be calculated using Pay Items in Section 999A.

STATE OF ALABAMA

BID LIMIT: U

AMOUNT: UNLIMITED

LICENSE NO.: 40677

TYPE: RENEWAL

State Licensing Board for General Contractors

THIS IS TO CERTIFY THAT

CHRIS BREWER CONTRACTING INC

MOBILE, AL 36607

is hereby licensed a General Contractor in the State of Alabama and is authorized to perform the following type(s) of work:

D: DEMOLITION, HS: HIGHWAYS AND STREETS, MU: MUNICIPAL AND UTILITY

until **November 30, 2026** when this Certificate expires.

Witness our hands and seal of the Board, dated Montgomery, Ala.,

1st day of **December, 2025**

224949

Michael B. Tew SECRETARY-TREASURER

Charles T. Cobb, Jr. CHAIRMAN

R E S O L U T I O N

Sponsored by: Mayor Spiro N. Cheriogotis

BE IT RESOLVED BY THE CITY COUNCIL OF MOBILE, ALABAMA, that the Mayor and City Clerk be, and they hereby are, authorized and directed to execute and attest, respectively for and on behalf of the City of Mobile, a Contract by and between the City of Mobile, and the company listed below, for work as outlined in the Contract attached hereto and made a part hereof as though set forth in full. A copy of said Contract is on file in the office of the City Clerk.

Name of company: Chris Brewer Contracting Inc.

Project name: 2026 Public Services Storm Drainage Repair & Maintenance

Project number: 2026-2070-01SW

Amount: $1,432,149.36

Adopted:

_____

City Clerk

CAPITAL CONTRACT SUMMARY SHEET

AGENDA ITEM SUMMARY SHEET

Agenda of: July 7, 2026

Submitted by:
Lana Pafenbach, Assistant City Clerk

Sponsored by:

Purpose and Scope of Project:
Submitted by Lana Pafenbach on behalf of Karen Poth

Amount of Contract:

Funding Source

ATTACHMENTS:
1. Finn Partners - resolution for city Council
2. City of Mobile 2026 COI
3. Finn Partners Inc._CYA_6.26.26
4. National Maritime Museum of the Gulf x Finn Partners_Professional Services_6.30.26 (FP signed)
5. NMMOG x FINN Partners SOW

REVIEWERS:
Lana Pafenbach
Donna Bryars
Cherlina Monteiro
James Barber

R E S O L U T I O N

Sponsored by: Mayor Spiro N. Cheriogotis

BE IT RESOLVED BY THE CITY COUNCIL OF MOBILE, ALABAMA, that the Mayor and City Clerk be, and they hereby are, authorized and directed to execute and attest, respectively for and on behalf of the City of Mobile, a Contract by and between the City of Mobile, and the company listed below, for work as outlined in the Contract attached hereto and made a part hereof as though set forth in full. A copy of said Contract is on file in the office of the City Clerk.

Name of company: Finn Partners, Inc.

Project name: Son of a Son of a Sailor Exhibition – Marketing and PR

Amount: $90,000

Adopted:

_____

City Clerk

CERTIFICATE OF LIABILITY INSURANCE

DATE (MM/DD/YYYY): 6/30/2026

THIS CERTIFICATE IS ISSUED AS A MATTER OF INFORMATION ONLY AND CONFERS NO RIGHTS UPON THE CERTIFICATE HOLDER. THIS CERTIFICATE DOES NOT AFFIRMATIVELY OR NEGATIVELY AMEND, EXTEND OR ALTER THE COVERAGE AFFORDED BY THE POLICIES BELOW. THIS CERTIFICATE OF INSURANCE DOES NOT CONSTITUTE A CONTRACT BETWEEN THE ISSUING INSURER(S), AUTHORIZED REPRESENTATIVE OR PRODUCER, AND THE CERTIFICATE HOLDER.

IMPORTANT: If the certificate holder is an ADDITIONAL INSURED, the policy(ies) must have ADDITIONAL INSURED provisions or be endorsed. If SUBROGATION IS WAIVED, subject to the terms and conditions of the policy, certain policies may require an endorsement. A statement on this certificate does not confer rights to the certificate holder in lieu of such endorsement(s).

PRODUCER
Risk Strategies Company
New York Office
PO Box 818078
Cleveland, OH 44181

CONTACT NAME: Certificate Department
PHONE (A/C, No, Ext): (212) 867-3550 **FAX (A/C, No):**
E-MAIL ADDRESS: certificates2@risk-strategies.com

INSURER(S) AFFORDING COVERAGE	NAIC #
INSURER A : Travelers Casualty Insurance Co of Amer	19046
INSURER B : Travelers Property Casualty Co of Amer	25674
INSURER C : Travelers Indemnity Company	25658
INSURER D : AXIS Insurance Company	37273
INSURER E :	
INSURER F :	

INSURED
Art and Science Partners, Inc.
RedBird Development Group LLC
17 State Street, Suite 1830
New York NY 10004

COVERAGES **CERTIFICATE NUMBER:** 91260235 **REVISION NUMBER:**

THIS IS TO CERTIFY THAT THE POLICIES OF INSURANCE LISTED BELOW HAVE BEEN ISSUED TO THE INSURED NAMED ABOVE FOR THE POLICY PERIOD INDICATED. NOTWITHSTANDING ANY REQUIREMENT, TERM OR CONDITION OF ANY CONTRACT OR OTHER DOCUMENT WITH RESPECT TO WHICH THIS CERTIFICATE MAY BE ISSUED OR MAY PERTAIN, THE INSURANCE AFFORDED BY THE POLICIES DESCRIBED HEREIN IS SUBJECT TO ALL THE TERMS, EXCLUSIONS AND CONDITIONS OF SUCH POLICIES. LIMITS SHOWN MAY HAVE BEEN REDUCED BY PAID CLAIMS.

INSR LTR	TYPE OF INSURANCE	ADDL INSD	SUBR WVD	POLICY NUMBER	POLICY EFF (MM/DD/YYYY)	POLICY EXP (MM/DD/YYYY)	LIMITS	
A	✓ **COMMERCIAL GENERAL LIABILITY** ☐ CLAIMS-MADE ✓ OCCUR ✓ Contractual Liability Included GEN'L AGGREGATE LIMIT APPLIES PER: ✓ POLICY ☐ PRO-JECT ☐ LOC ☐ OTHER:	✓		680-2J987390	3/31/2026	3/31/2027	EACH OCCURRENCE DAMAGE TO RENTED PREMISES (Ea occurrence) MED EXP (Any one person) PERSONAL & ADV INJURY GENERAL AGGREGATE PRODUCTS - COMP/OP AGG Emp Ben.	$ 2,000,000 $ 300,000 $ 5,000 $ $ 4,000,000 $ 4,000,000 $ 2,000,000
B	**AUTOMOBILE LIABILITY** ☐ ANY AUTO ☐ OWNED AUTOS ONLY ☐ SCHEDULED AUTOS ✓ HIRED AUTOS ONLY ✓ NON-OWNED AUTOS ONLY			BA-2J98776A	3/31/2026	3/31/2027	COMBINED SINGLE LIMIT (Ea accident) BODILY INJURY (Per person) BODILY INJURY (Per accident) PROPERTY DAMAGE (Per accident)	$ 1,000,000 $ $ $
C	✓ **UMBRELLA LIAB** ✓ OCCUR **EXCESS LIAB** ☐ CLAIMS-MADE ☐ DED ☐ RETENTION $ 10,000			CUP-2J98792A	3/31/2026	3/31/2027	EACH OCCURRENCE AGGREGATE	$ 3,000,000 $ 3,000,000
	WORKERS COMPENSATION AND EMPLOYERS' LIABILITY Y / N ANYPROPRIETOR/PARTNER/EXECUTIVE OFFICER/MEMBER EXCLUDED? ☐ **(Mandatory in NH)** If yes, describe under DESCRIPTION OF OPERATIONS below	N / A					☐ PER STATUTE ☐ OTH-ER E.L. EACH ACCIDENT E.L. DISEASE - EA EMPLOYEE E.L. DISEASE - POLICY LIMIT	$ $ $
D	MULTIMEDIA (E&O) LIABILITY			P-001-000142306-07	3/31/2026	3/31/2027	Each Occurrence Aggregate	$5,000,000 $5,000,000
A	MISCELLANEOUS RENTED EQUIPMENT			680-2J987390	3/31/2026	3/31/2027	Limit	$50,000

DESCRIPTION OF OPERATIONS / LOCATIONS / VEHICLES (ACORD 101, Additional Remarks Schedule, may be attached if more space is required)

{Additional Insured Wording Attached}

CERTIFICATE HOLDER
DDCD013

Verizon Communications Inc.
1 Verizon Way
Basking Ridge NJ 07920

CANCELLATION

SHOULD ANY OF THE ABOVE DESCRIBED POLICIES BE CANCELLED BEFORE THE EXPIRATION DATE THEREOF, NOTICE WILL BE DELIVERED IN ACCORDANCE WITH THE POLICY PROVISIONS.

AUTHORIZED REPRESENTATIVE
RSC Insurance Brokerage

© 1988-2015 ACORD CORPORATION. All rights reserved.

ADDITIONAL REMARKS SCHEDULE

AGENCY	NAMED INSURED
Risk Strategies Company	Art and Science Partners, Inc. RedBird Development Group LLC 17 State Street, Suite 1830 New York NY 10004
POLICY NUMBER	
CARRIER / **NAIC CODE**	**EFFECTIVE DATE:**

ADDITIONAL REMARKS

THIS ADDITIONAL REMARKS FORM IS A SCHEDULE TO ACORD FORM,

FORM NUMBER: 25 **FORM TITLE:** Certificate of Liability Insurance (03/16)

HOLDER: Verizon Communications Inc.
ADDRESS: 1 Verizon Way Basking Ridge NJ 07920

Verizon Communications Inc. and all its subsidiaries and affiliates are named as additional insured as their interests may appear excluding workersÆ compensation, employerÆs liability and errors & omissions liability. Coverage is primary and non-contributory with any insurance or program of self insurance that may be maintained by Verizon. Supplier shall waive its rights of subrogation against Verizon for claims, which may arise out of the services provided under this Agreement.

© 2008 ACORD CORPORATION. All rights reserved.
The ACORD name and logo are registered marks of ACORD

LEGAL DEPARTMENT — CONTRACT REVIEW COVER SHEET [REVIEW # ____]

To: Karen Poth / Gulf Quest
Requester / Department

From: City of Mobile Legal Department
Date: 06/26/26
CityLaw ID: A26-1982
Project / Contract Title: _____
Vendor / Consultant: Finn Partners, Inc

I. DOCUMENTS SUBMITTED FOR LEGAL REVIEW (✓ all that apply)

- ■ Contract / Agreement / MOU / Easement
- ■ Exhibit A – Scope of Work
- ☐ Exhibit B – Compensation or Fee Schedule
- ☐ Exhibit C – Insurance Requirements
- ☐ Certificate of Insurance (COI)
- ☐ Endorsements
- ☐ Other (specify): _____
- ☐ Resolution
- ☐ Amendment(s)
- ☐ Change Order(s)
- ☐ Contract Prior Amendments/Change Orders
- ☐ E-Verify documents

II. LEGAL REVIEW STATUS

☐ **Approved as to Legal Form and Compliance** — All submitted documents have been reviewed and approved for legal compliance.

■ *Requires revision before final approval*

III. FOR CIVICPLUS AND ADOBE MATTERS
[The following items were not submitted to Legal for Review]

- ☐ Contract / Agreement / MOU / Easement
- ☐ Exhibit A – Scope of Work
- ☐ Exhibit B – Compensation or Fee Schedule
- ☐ Exhibit C – Insurance Requirements
- ■ Certificate of Insurance (COI)
- ■ Endorsements
- ☐ Other (specify): _____
- ■ Resolution
- ☐ Amendment(s)
- ☐ Change Order(s)
- ☐ Contract Prior Amendments/Change Orders
- ☐ E-Verify documents

_____

_____

V. LEGAL DEPARTMENT SIGN-OFF

VS _____ 06/26/26 _____

Reviewed By **Date**

STATE OF ALABAMA
CITY OF MOBILE

PROFESSIONAL SERVICES CONTRACT
CITY OF MOBILE

AGREEMENT

This Professional Services Contract (sometimes hereinafter "Agreement") made and entered into as of the date of execution, by and between **THE CITY OF MOBILE**, a Municipal Corporation of the State of Alabama (hereinafter referred to as the "City") and Finn Partners, Inc. (hereinafter "Contractor"), as follows:

WHEREAS, Contractor is uniquely qualified to engage in Public Relations and Media Relations services; and

WHEREAS, Contractor is also highly skilled in promoting engagement and events through strategic media outreach, event-driven publicity, social media and tourism-focused digital engagement, and coordination of media attendance and communications for exhibition openings and related events.

WHEREAS, the specialized nature of the services required does not fall within any current classification of the Mobile County Personnel Board, making it appropriate to secure such services by independent contract.

WHEREAS, City desires to engage this Contractor, due to the Contractor's high degree of professional skill to generate awareness for the Jimmy Buffett Experience at National Maritime Museum of the Gulf.

NOW THEREFORE, City and Contractor, for and in consideration of the mutual covenants and agreements hereinafter set forth to be kept and performed by the other, and other good and valuable consideration, the receipt and sufficiency of all of which are hereby acknowledged, do hereby covenant and agree as follows:

I. PROFESSIONAL SERVICES TO BE PERFORMED

The professional services to be performed by the Service Provider under this Agreement (the "Services") for the City of Mobile are set forth in **Exhibit A (Scope of Work)**.

A. The Contractor shall perform all professional services under this contract with the professional skill and care ordinarily provided by a competent professional practicing under the same or similar

circumstances and as expeditiously as is prudent considering the ordinary professional skill and care of such profession.

B. The Contractor shall report to the Executive Director of the National Maritime Museum of the Gulf ("Executive Director") or her designee who shall provide specific tasking to the Contractor with respect to these services.

II. TERM OF AGREEMENT

A. This Contract shall commence immediately upon execution by both the City and the Contractor. It shall continue until September 30, 2026.

III. COMPENSATION

The City agrees to pay the Contractor an amount not to exceed Ninety Thousand Dollars ($90,000.00), which amount shall include the service fee of Thirty-Five Thousand Dollars ($35,000.00) and expenses incurred by Contractor in connection with the performance of the Services, invoiced by Contractor, and approved in writing by the City, all in accordance with the terms of this Agreement.

IV. METHOD OF PAYMENT

A. Payments shall be made via direct deposit to a banking institution designated by the Contractor.

V. ADDITIONAL SERVICES

A. No changes to this Contract or the performance contemplated hereunder shall be made unless the same are in writing and signed by both the Contractor and the City's authorized agent.

B. If the City requires the Contractor to perform additional services related to this Contract then the Contractor shall be entitled to additional compensation based on an amended fee schedule to the extent necessary to accommodate such additional work. The additional compensation shall be agreed upon in writing before the commencement of any additional services or changes and shall be incorporated into this Contract by written amendment. The City shall not pay for any additional service or work performed before a written amendment to this Contract is executed by the City and the Contractor. Notwithstanding the preceding, in the event additional services are required as a result of error, omission or negligence of the Contractor, the Contractor shall not be entitled to additional compensation.

VI. LIABILITY OF CONTRACTOR

To the fullest extent permitted by law, Contractor shall defend and hold harmless the City of Mobile, Alabama, its officers, elected officials, agents, representatives, employees, and volunteers (collectively, "City") from and against all claims, demands, suits, damages, losses, liabilities, fines, penalties, judgments, and expenses (including reasonable attorney fees, court costs, and expert

witness fees) arising out of or resulting from bodily injury, sickness, disease, death, or property damage (including loss of use), to the extent caused in whole or in part by the negligent, reckless, or intentional acts or omissions of Contractor, its subconsultants, or anyone for whom Contractor is legally responsible. Contractor shall have no obligation to indemnify or defend the City against losses caused by the City's sole negligence; for concurrent fault, Contractor's obligation is limited to the extent of Contractor's own fault as allowed by §41-9A-3. Consultant's indemnity obligations are independent of and shall not be limited by any insurance maintained by Consultant. This section of the Agreement will survive the expiration or termination of the Agreement.

VII. CONTRACTOR'S INSURANCE.

For the term of this Agreement, the Contractor shall acquire and maintain in full force and effect the following liability and comprehensive insurance issued by a company licensed and qualified to do business in the State of Alabama, which such insurance shall name the City of Mobile as an additional insured, and shall attach to this contract, as proof thereof, a certificate of insurance issued by an agent licensed and qualified to do business in the State of Alabama. Said insurance coverage shall be Primary and Non-contributory, waiver of subrogation shall apply in favor of City with respect to all policies, and no policy will be altered or terminated unless City shall be given written notice of such alteration or termination delivered to City not less than thirty (30) days before the effective date of such alteration or termination

General Liability Insurance - public liability including premises, products and complete operations.

Bodily injury liability:

$250,000 each person
$500,000 each occurrence

Property damage liability:

$100,000 each occurrence

Or, (in lieu of (1) and (2) above)

Bodily injury and property damage combined:

$500,000 per occurrence

If the certificate of insurance referenced in this agreement does not evidence insurance of owned vehicles, said certificate and this sentence shall evidence the Contractor's covenant that it will not purchase or obtain any vehicles during the term of this Agreement."

VIII. RESPONSIBILITIES OF THE CONTRACTOR

A. The Contractor agrees to respond to communication from the City within three working days unless a shorter response time is specified by the City.

B. The Contractor shall maintain books, records, documents, and other evidence directly pertaining to or connected with the services under this Contract which shall be available and accessible at the Contractor's offices for the purpose of inspection, audit, and copying during normal business hours by the City, or any of its authorized representatives.

C. The Contractor is, and shall be, in the performance of all work, services and activities under this Contract, an independent contractor.

IX. FORCE MAJEURE

A. The Contractor specifically agrees that all work performed under the terms and conditions of this Contract shall be completed within the time limits as set forth herein, or as otherwise identified in the City's purchase order or specified by the Ex, subject only to delays caused by force majeure, or as otherwise defined herein. "Force majeure" shall be deemed to be any cause affecting the performance of this Contract arising from or attributable to acts, events, omissions or accidents beyond the reasonable control of the parties.

X. OBLIGATIONS OF CITY

A. City shall designate the Executive Director to act as City's representative with respect to this Agreement, as set out herein above. Such person(s) will have the authority to transmit instructions, receive information, and interpret and define the City's policies and decisions regarding the scope of services.

B. City shall furnish to Contractor all applicable information and technical data in City's possession or control reasonably requested by Contractor for the proper performance of the Services.

C. The City's Designated representative will do all things necessary to properly administer the terms and conditions of this Agreement.

D. The City shall not provide any services to the Contractor in connection with any claim brought on behalf of or against the Contractor.

XI. TERMINATION

A. The City shall have the right at any time upon thirty (30) calendar day's written notice to the Contractor to terminate the services of the Contractor. The City shall pay to the Contractor and

the Contractor shall accept as full payment for its services, a sum of money equal to the work completed in any commenced but incomplete services.

B. Any failure of the Contractor to satisfy the requirements of this Contract, as documented by the Executive Director, shall be considered a default of the Contract and sufficient reason for termination. 1. For defaults that are curable (as determined by the City), the Contractor shall be notified in writing by the City and shall have an opportunity to cure such default(s) within ten (10) working days after notification. 2. For defaults that are not curable (as determined by the City), notice of the termination date shall be given as deemed appropriate by the City.

C. In the event the City's termination of this Contract for default is in any way deficient, at the option of the City such termination shall be deemed to be a termination for convenience.

D. The parties may mutually agree to terminate this Contract. Such termination shall be evidenced by a notice issued by the City. The City shall pay to the Contractor and the Contractor shall accept as payment for its services, a sum of money equal to the work completed in any commenced but incomplete services.

E. In the event that the Contractor has abandoned performance under this Contract, then the City may terminate this Contract upon three (3) calendar day's written notice to the Contractor indicating its intention to do so. Payment for work performed prior to the Contractor's abandonment shall be as stated above.

XII. DISPUTE RESOLUTION

A. Any dispute, action or proceeding arising out of or related to this Agreement will be exclusively commenced in the state courts of Mobile City, Alabama, or where proper subject matter jurisdiction exists in the United States District Court for the Southern District of Alabama. Each party irrevocably submits and waives any objections to the exclusive personal jurisdiction and venue of such courts, including any objection based on forum non conveniens.

B. Contractor agrees to waive all rights to trial by jury for any litigation undertaken concerning this Agreement.

C. This Agreement and the rights and obligations of the parties shall be governed by the laws of the State of Alabama without regard to its conflict of laws principles.

XIII. NOTICES

A. The City of Mobile Authorized Agent, authorized to act on the City's behalf with respect to the Project, is The Executive Director of the National Maritime Museum of the gulf or the Director's designated representative.

B. Any notices of default or termination shall be sufficient if sent by parties via United States Certified mail, postage paid, or via nationally recognized delivery service, to the address listed below:

CITY:
Maritime Museum of the Gulf
c/o Karen Poth
155 South Water Street
Mobile, AL 36602

CONTRACTOR:
FINN Partners, Inc.
c/o Martin Ettlemyer
1675 Broadway
New York, NY 10019

Copy to:
City Attorney
City of Mobile Legal Department
P.O. Box 1827
Mobile, AL 36633-1827

C. Any change in the City's Executive Director of the National Maritime Museum of the Gulf or the Contractor's Representative will be promptly communicated by the party making the change.

XIV. DEFAULT/ BREACH.

A. **Default**. Default, for purposes of this contract, shall include, but is not limited to, any of the following: 1) failure to perform the work or provide the services in accordance with the terms of the contract, 2) failure to meet established deadlines or schedules, 3) substandard or non-compliant work or services, 4) failure to comply with applicable laws, regulations, or permits, including state and federal law, local ordinances and any federal grant requirements, 5) failure to communicate adequately with the City regarding progress or issues, 6) unauthorized assignment or transfer of the contract without prior written consent from the City, 7) failure to correct deficiencies after receiving written notice from the City, 8) misrepresentation or falsification of information provided during performance, 9) failure to maintain required insurance coverage , 10) unauthorized use of City property, equipment, or resources, 11) violation of confidentiality or data protection requirements outlined in the contract, 12) failure to provide required reports, documentation, or certifications, 13) failing to comply with written directives from the City to correct specific issues or deficiencies, 14) failure to maintain adequate security measures for sensitive information or physical assets.

XV. EFFECT OF DEFAULT

A. Upon the occurrence of default, City shall have rights which include but are not limited to (i) the right to keep this Contract in effect and sue Contractor for all damages caused by the default and recover the cost thereof; (ii) the right to cure any such default by Contractor and to recover any damages caused thereby; and (iii) the right to terminate this Contract either as to the entire Project or part thereof, in either case by giving Contractor written notice of such termination. In the event of termination of this Agreement by the City because of the Contractor's default or breach, the City

may take possession of all material, and may finish the Project by whatever method and means City may select subject to its obligation to reasonably mitigate.

XVI. WITHHOLDING PAYMENT DUE

A. Default by Contractor shall excuse any obligation of City to pay compensation or sums otherwise due Contractor under the agreement. City may withhold any and all sums due if there has been a default or breach by Contractor of any provision of this agreement.

XVII. CURE PLAN

A. If Contractor fails to comply with any material provision of this agreement, the City may issue a written notice requiring Contractor to submit a corrective action plan (CAP) within such time as City directs. If Contractor fails to provide an acceptable CAP or does not cure the breach within the time frame specified, the City may invoke additional sanctions or terminate this Agreement.

XVIII. ANTI-BOYCOTT

A. Contractor agrees it is not currently engaged in and will not engage in the boycott of a person or an entity based in or doing business with a jurisdiction with which the State of Alabama can enjoy open trade within the meaning of Alabama Code 41-16-5.

XIX. NON-DISCRIMINATION

A. Contractor shall comply with all Federal, State and local laws concerning nondiscrimination, including but not limited to City of Mobile Ordinance No. 14-034 which requires, inter alia, that all contractors performing work for the City of Mobile not discriminate on the basis of race, creed, color, national origin or disability, require that all subcontractors they engage do the same, and make every reasonable effort to assure that fifteen percent of the work performed under contract be awarded to socially and economically disadvantaged individuals and business entities.

XX. COMPLIANCE WITH IMMIGRATION LAW

A. By signing this contract, the contracting parties affirm, for the duration of the Agreement, that they will not violate federal immigration law or knowingly employ, hire for employment, or continue to employ an unauthorized alien within the state of Alabama. Pursuant to Alabama Code (1975) Section 31-13-9, if Contractor employs one or more employees within the State of Alabama, Contractor shall provide documentation establishing that Contractor is enrolled in the E-Verify program. Furthermore, a contracting party found to be in violation of this provision shall be deemed in breach of the Agreement and shall be responsible for all damages resulting therefrom.

XXI. MISCELLANEOUS

A. This Agreement constitutes the sole and complete understanding between the parties and supersedes all agreements between them, whether oral or written with respect to the subject matter. No Amendment, change or addendum to this Agreement is enforceable unless agreed to in writing by both parties and incorporated into this Agreement.

B. The language of this Agreement shall be construed, in all cases, according to its fair meaning and not for or against any party hereto.

C. The parties hereto do not intend nor shall this Agreement be construed to grant any rights, privileges or interest to any third party.

D. Time is of the essence with regard to each and every aspect of the Contractor's performance under this Contract.

E. The rights and remedies of the City provided for under this Agreement are in addition to any other rights and remedies provided by law.

F. If the Contractor is comprised of more than one legal entity, each entity shall be jointly and severally liable hereunder.

G. The exercise by either party of any rights or remedies provided herein shall not constitute a waiver of any other rights or remedies available under this Agreement or any applicable law.

H. If any term, condition, or covenant of this Agreement is held by a court of competent jurisdiction to be invalid, void, or unenforceable, the remaining provisions of this Agreement shall be valid and binding on each party.

I. The parties covenant and agree that each is duly authorized to enter into and perform this Agreement and those executing this Agreement have all requisite power and authority to bind the parties.

J. Neither the City's review, approval or acceptance of, nor payment for, the services required under this Agreement shall be construed to operate as a waiver of any rights under this Agreement or of any cause of action arising out of the performance of this Agreement.

K. Paragraph headings are for the convenience of the parties and for reference purposes only and shall be given no legal effect.

L. **Preparation of Agreement**. All provisions of this Agreement have been subject to full and careful review by and negotiation between Contractor and City. Each such party has availed itself of such legal advice and counsel as it, respectively, has deemed appropriate. The parties hereto agree that neither one of them shall be deemed to be the drafter or author of this Agreement, and

in the event this Agreement is subject to interpretation or construction by a court of law or panel of arbitration, such court or panel shall not construe this Agreement or any portion hereof against either party as the drafter of this Agreement.

M. **Binding Effect**. The provisions of this Agreement shall bind and inure to the benefit of the parties and their respective successors and permitted assigns.

N. **Counterparts**. This Agreement may be executed in one or more counterparts, each of which shall be deemed an original, but all of which together shall constitute a single agreement.

O. **Amendment and Waiver**. This Agreement may be amended, modified or supplemented only by a writing executed by each of the parties. Any party may in writing waive any provisions of this Agreement to the extent such provision is for the benefit of the waiving party. No action taken pursuant to this Agreement shall be deemed to constitute a waiver by that party of any other party's compliance with provisions of this Agreement. No waiver by any party of a breach of any provision of this Agreement shall be construed as a waiver of any subsequent or different breach, and no forbearance by a party to seek a remedy for noncompliance or breach by another party shall be construed as a waiver of any right or remedy with respect to such noncompliance or breach.

P. **Attorney's Fees and Costs**. If the City is required to take legal action to enforce this contract, the contractor agrees to reimburse the City for all reasonable attorney's fees and associated costs incurred.

Q. **Non-Waiver of Rights**. Failure by the City to enforce any provision of this contract shall not be deemed a waiver of its rights to enforce any other provision or the same provision in the future.

R. **Sovereign Immunity**. Nothing in this Agreement shall be construed as a waiver of any governmental, sovereign, or other immunity by the City, its officials, or employees. All defenses and limitations of liability provided by law remain fully applicable.

S. **Non-Assignment**. The City and Contractor each bind itself, its successors and assigns, to the other party of this contract, in respect to all covenants of this agreement. The contractor shall not transfer or assign this contract or the license or any of the rights or privileges granted herein without the prior written consent of the City, which such consent shall be granted or denied solely at the City's sole discretion.

[Signature page to follow]

IN WITNESS WHEREOF, we have hereunto set our hands and seals on this the day and year first written.

Finn Partners, Inc.

By: _____

Print Name: Martin Ettlemyer, CFO

Date: 7/1/2026

ACKNOWLEDGEMENT

The State of New Jersey }
Monmouth County}

I, Asmat Bajwa, a Notary Public, in and for said County in said State, hereby certify that Martin Ettlemyer, whose name is signed to the foregoing conveyance and who is known to me, acknowledged before me on this day that, being informed of the contents of the conveyance, with full authority, executed the same voluntarily.

Given under my hand this the 1 day of July, 2026.

_____
Notary Public

(Seal)
ASMAT BAJWA
Notary Public, State of New Jersey
My Commission Expires Mar 23, 2028

CITY OF MOBILE, A Municipal Corporation

By: _____

Spiro N. Cheriogotis, Mayor

Date: _____

ATTEST:

_____ Date: _____

City Clerk

SCOPE OF WORK

Proposed Activity and SOW: Jimmy Buffett Experience at National Maritime Museum of the Gulf Public Relations Support

Objective: Generate awareness for the Jimmy Buffett Experience at National Maritime Museum of the Gulf through strategic national, regional, and local media relations efforts, positioning the exhibition as a nationally relevant attraction and a must-visit destination for audiences throughout the Gulf Coast region.

1. PR Strategy & Timeline Development
    a. Lead development of a PR timeline and communications strategy aligned with milestones, including ticket on-sale, announcements, preview opportunities, and opening day.
    b. Develop a strategic editorial framework positioning the Jimmy Buffett Experience as a must-see cultural and entertainment attraction for local, regional, and national audiences.
2. Media Relations / Asset Development
    a. Craft core messaging and narrative to position the Jimmy Buffett Experience as a premier museum exhibition celebrating the life, music, and cultural legacy of Jimmy Buffett.
    b. Develop and manage targeted media lists across national, regional, and local outlets, including arts & culture, lifestyle, travel/tourism, entertainment, music, and museum-focused media.
    c. Conduct proactive outreach to Jimmy Buffett-focused publications, fan communities, newsletters, and other relevant media.
    d. Coordinate media interviews with museum leadership, exhibit representatives, and approved spokespeople.
    e. Manage all outreach, fact-checking, media requests, and creative asset distribution with media.
    f. Develop and distribute press materials as needed, including press releases, media advisories, and supporting media assets.
3. Engagement and Events
    a. Proactively seek opportunities for exhibit coverage, previews, feature stories, and event-driven media placements.
    b. Facilitate attendance and engagement from local and regional media at opening events and media preview opportunities.
    c. Identify and engage relevant social media publishers, local discovery platforms, tourism-focused digital outlets, and media-style content channels serving regional travel, culture, entertainment, and lifestyle audiences.
    d. Support media credentialing, RSVP coordination, and communications related to approved media events.
4. Paid Media Planning & Placement Support

a. Develop recommendations for paid media opportunities to support awareness and visitation in priority markets, including Alabama, Florida, Georgia, Tennessee, and Louisiana.
b. Research, identify, evaluate, and recommend advertising opportunities across travel, tourism, lifestyle, entertainment, music, Jimmy Buffett fan-focused, Parrothead, Margaritaville, and consumer channels, including print, digital, newsletter, and destination-based placements.
c. Coordinate with media outlets, publishers, and publications regarding specifications, deadlines, and placement logistics.
d. Assist with coordination of approved media placements, including coordination of Client-developed creative assets and resources, to support timely delivery of advertising materials and compliance with publisher specifications. All media costs and placement fees shall be paid by Client unless otherwise agreed in writing.

5. Admin Activities
    a. Provide media coverage reports and updates as requested by client.
    b. Conduct bi-weekly calls to communicate in-progress media outreach, upcoming opportunities, progress, and results.
    c. Maintain ongoing communication with client regarding media opportunities, interview requests, event attendance, and strategic recommendations.

SCOPE OF WORK

Proposed Activity and SOW: Jimmy Buffett Experience at National Maritime Museum of the Gulf Public Relations Support

Objective: Generate awareness for the Jimmy Buffett Experience at National Maritime Museum of the Gulf through strategic national, regional, and local media relations efforts, positioning the exhibition as a nationally relevant attraction and a must-visit destination for audiences throughout the Gulf Coast region.

1. PR Strategy & Timeline Development
    a. Lead development of a PR timeline and communications strategy aligned with milestones, including ticket on-sale, announcements, preview opportunities, and opening day.
    b. Develop a strategic editorial framework positioning the Jimmy Buffett Experience as a must-see cultural and entertainment attraction for local, regional, and national audiences.
2. Media Relations / Asset Development
    a. Craft core messaging and narrative to position the Jimmy Buffett Experience as a premier museum exhibition celebrating the life, music, and cultural legacy of Jimmy Buffett.
    b. Develop and manage targeted media lists across national, regional, and local outlets, including arts & culture, lifestyle, travel/tourism, entertainment, music, and museum-focused media.
    c. Conduct proactive outreach to Jimmy Buffett-focused publications, fan communities, newsletters, and other relevant media.
    d. Coordinate media interviews with museum leadership, exhibit representatives, and approved spokespeople.
    e. Manage all outreach, fact-checking, media requests, and creative asset distribution with media.
    f. Develop and distribute press materials as needed, including press releases, media advisories, and supporting media assets.
3. Engagement and Events
    a. Proactively seek opportunities for exhibit coverage, previews, feature stories, and event-driven media placements.
    b. Facilitate attendance and engagement from local and regional media at opening events and media preview opportunities.
    c. Identify and engage relevant social media publishers, local discovery platforms, tourism-focused digital outlets, and media-style content channels serving regional travel, culture, entertainment, and lifestyle audiences.
    d. Support media credentialing, RSVP coordination, and communications related to approved media events.
4. Paid Media Planning & Placement Support
    a. Develop recommendations for paid media opportunities to support awareness and visitation in priority markets, including Alabama, Florida, Georgia, Tennessee, and Louisiana.
    b. Research, identify, evaluate, and recommend advertising opportunities across travel, tourism, lifestyle, entertainment, music, Jimmy Buffett fan-focused, Parrothead, Margaritaville, and consumer channels, including print, digital, newsletter, and destination-based placements.
    c. Coordinate with media outlets, publishers, and publications regarding specifications, deadlines, and placement logistics.
    d. Assist with coordination of approved media placements, including coordination of Client-developed creative assets and resources, to support timely delivery of advertising materials and compliance with publisher specifications. All media costs and placement fees shall be paid by Client unless otherwise agreed in writing.
5. Admin Activities
    a. Provide media coverage reports and updates as requested by client.
    b. Conduct bi-weekly calls to communicate in-progress media outreach, upcoming opportunities, progress, and results.
    c. Maintain ongoing communication with client regarding media opportunities, interview requests, event attendance, and strategic recommendations.

Term:
July 1, 2026 – September 30, 2026

Fees and Expenses:
The total fee shall be paid in one installment of $35,000, which shall be billed upon execution of the SOW.

Expenses: National Maritime Museum of the Gulf agrees to reimburse Agency for expenses incurred and out-of-pocket disbursements made in connection with Agency's performance of Services hereunder as outlined in Section 3 of the Agreement.

IN WITNESS WHEREOF, the parties hereto have caused this SOW to be executed as of the Effective Date.

National Maritime Museum of the Gulf	**FINN PARTNERS, INC.**
By:	By:
Name:	Name: Martin Ettlemyer
Title:	Title: Chief Financial Officer
Date:	Date:

CAPITAL CONTRACT SUMMARY SHEET

AGENDA ITEM SUMMARY SHEET

Agenda of: July 7, 2026

Submitted by:
Shayla Beaco, Exec Dir - Build Mobile

Sponsored by:
Spiro Cheriogotis, Mayor

Purpose and Scope of Project:
A study to evaluate the City's cost of providing development review and permitting services and to compare those costs with the current fees charged for those services, in order to ensure fees are appropriate and aligned with actual service delivery costs.

Amount of Contract:
$60,490.00

Funding Source
Build Mobile Professional/Technical 10043040.42200

ATTACHMENTS:
1. RESOLUTION PROFESSIONAL Services Impact v.2
2. Cover Letter
3. CONTRACT - SIGNED - Mobile MGT Solutions Agreement 2026-06-30 PE
4. MGT Proposal_City of Mobile_UF Study April 2026 (Exhibit A)
5. MGT Proposal_City of Mobile_UF Study April 2026 (Exhibit B)
6. City of Mobile - COI
7. MGT Employer MOU for E-Verify

REVIEWERS:
Lisa Watkins
Shayla Beaco

RESOLUTION NO. _____ 2026

RESOLUTION AUTHORIZING THE MAYOR TO EXECUTE A PROFESSIONAL SERVICES CONSULTANT CONTRACT WITH MGT IMPACT SOLUTIONS, LLC, FOR A COMPREHENSIVE COST OF SERVICES STUDY FOR DEVELOPMENT-RELATED USER FEES WITHIN BUILD MOBILE

Sponsored by: Spiro N. Cheriogotis

WHEREAS, the City of Mobile desires to conduct a Comprehensive Cost of Services Study for Development-Related User Fees to evaluate the costs associated with providing development-related services and to develop recommendations for an appropriate fee structure; and

WHEREAS, MGT Impact Solutions, LLC, is qualified to perform such professional consulting services; and

WHEREAS, the City desires to enter into a Professional Services Consultant Contract with MGT Impact Solutions, LLC, for an amount not to exceed Sixty Thousand Four Hundred Ninety Dollars ($60,490.00); and

NOW, THEREFORE, BE IT RESOLVED BY THE CITY COUNCIL OF THE CITY OF MOBILE, ALABAMA**,** that the Mayor and the City Clerk be, and they hereby are authorized to execute and attest, respectively, for and on behalf of the City of Mobile, the Professional Services Agreement between MGT Impact Solutions, LLC and the City of Mobile, in an amount not to exceed $60,490.00, attached hereto or one with wording substantially similar, and made apart hereof, as though set forth in full, and to take such further action necessary to effectuate the Agreement. A copy of said Agreement is on file in the office of the City Clerk.

ATTEST:

_____
City Clerk

July 1, 2026

Mobile City Council

Re: Approval of Professional Services Agreement with MGT Solutions for Permit Fee Study

Dear Members of the City Council:

You are being asked to approve a Professional Services Agreement with MGT Solutions to conduct a comprehensive permit fee study for the City of Mobile.

The City has not undertaken a comprehensive update of its permit fee structure in more than twenty years. As a result, it is important to evaluate whether current fees appropriately reflect the cost of providing permitting and inspection services, including plan review, inspections, and permit administration.

MGT Solutions will review current operations, determine the cost of service delivery, and benchmark Mobile's permit fees against neighboring and comparable jurisdictions. The goal is to ensure the City appropriately captures the cost of services while remaining competitive within the region.

The results of this study will provide the City Council with data-driven recommendations to support future decisions regarding permit fees. Any proposed adjustments will be brought forward for Council consideration through the normal public process.

Approval of this agreement will allow the City to proceed with this important evaluation and review effort.

Should you have any questions, please feel free to contact me at your convenience.

Thank you for your consideration.

Shayla Jones Beaco
Chief of Building and Planning

PROFESSIONAL SERVICES CONSULTANT CONTRACT
FOR A STIPULATED SUM
City of Mobile

BETWEEN: **CITY OF MOBILE**
205 Government Street
P. O. Box 1827
Mobile, Alabama 36633

And the Consultant: **MGT IMPACT SOLUTIONS, LLC**
4320 W. KENNEDY BLVD., Ste. 200
TAMPA, FL 33609

Secretary of State Registration No.: 000-389-696

For the following Project: Comprehensive Cost of Services Study for the Development-Related User Fees within Build Mobile
205 Government Street
Mobile, AL 36644

This Professional Services Agreement ("Agreement") is made and entered into as of the date on which the last party executes this Agreement (the "Effective Date"), by and between:

CITY OF MOBILE, ALABAMA ("City"), a municipal corporation organized under the laws of the State of Alabama, acting by and through its Mayor and City Council; and

MGT IMPACT SOLUTIONS, LLC ("Consultant"), a Florida limited liability company authorized to do business in the State of Alabama, with its principal office at 4320 W. Kennedy Blvd., Ste. 200, Tampa, Florida 33609.

Entire Agreement; Order of Precedence.

This Agreement, including all Exhibits and attachments hereto, which are incorporated herein by reference, constitutes the entire agreement between the City and the Consultant with respect to the subject matter hereof and supersedes all prior or contemporaneous agreements, proposals, negotiations, representations, or understandings, whether written or oral, relating to such subject matter.

The City expressly rejects and does not accept any terms or conditions contained in any prior or separate document submitted by the Consultant, including, but not limited to, any master services agreement, standard terms and conditions, or similar documents, unless expressly incorporated into this Agreement by written amendment executed by the City and the Consultant.

In the event of any conflict between the terms of this Agreement and any Exhibit or attachment, the terms of this Agreement shall control in all respects, and no Exhibit or attachment shall be construed to limit, modify, or waive any obligation, liability, or requirement set forth in this Agreement unless expressly stated in a written amendment executed by the City and the Consultant.

Any additional or conflicting terms proposed by the Consultant in any document, including but not limited to proposals, invoices, or communications, are hereby rejected and shall have no force or effect unless expressly agreed to in a written amendment executed by the City and the Consultant. The City shall not be deemed to have relied, directly or indirectly, upon any statements, representations, assumptions, or methodologies contained in any proposal, presentation, or other pre-contract materials provided by the Consultant, except to the extent such items are expressly incorporated into this Agreement.

No proposal, scope document, or other Consultant-generated material shall be incorporated by reference into this Agreement unless specifically identified and expressly incorporated in a written amendment executed by the City and the Consultant. The Consultant shall not require the

City to agree to any additional terms, conditions, licenses, or restrictions, including but not limited to software terms of use, click-through agreements, or access restrictions, in order to access or use any Deliverable.

The parties acknowledge that they have read and understand this Agreement and agree to be bound by its terms and conditions. No course of dealing, course of performance, prior practice, or informal communication between the parties shall be construed to modify, interpret, supplement, or waive any provision of this Agreement.

The Consultant shall not include in any Deliverable, report, model, or communication any disclaimer, limitation, or qualification that purports to limit the Consultant's responsibility for the accuracy, completeness, or reliability of the Services or Deliverables, or that is inconsistent with the terms of this Agreement. The Consultant acknowledges that the City may rely upon the Deliverables for governmental, regulatory, and policy purposes, and that such Deliverables may be disclosed to third parties, including elected officials and the public. The Consultant agrees that the Deliverables are intended to be relied upon by the City for such purposes and shall be prepared accordingly. The Consultant acknowledges that such reliance is reasonable and intended, and the Consultant's obligations under this Agreement extend to the preparation of Deliverables suitable for such reliance.

For purposes of this Agreement, "Deliverables" shall include, without limitation, all reports, models, analyses, data, documentation, presentations, work papers, calculations, assumptions, and all other work product prepared or provided by the Consultant under this Agreement, whether in draft or final form.

WHEREAS, the Consultant represents that it is qualified and experienced in the provision of governmental financial analysis and user fee studies, including cost-of-service analysis and the development of fee structures for public sector entities; and

WHEREAS, the City desires to engage the Consultant, and the Consultant agrees to provide such services, in accordance with the terms and conditions set forth herein;

NOW, THEREFORE, in consideration of the mutual covenants and agreements contained herein, and other good and valuable consideration, the receipt and sufficiency of which are hereby acknowledged, the City and the Consultant agree as follows:

I. PROFESSIONAL SERVICES TO BE PERFORMED

A. Scope of Services. The Consultant shall provide professional consulting services to the City for the Comprehensive Cost of Services Study for Development-Related User Fees within Build

Mobile (the "Project"), including project management, user fee design, user fee analysis, cost-of-service analysis, and preparation of all required Deliverables related to permit fees, regulatory fees, inspection fees, plan review fees, and other development-related service fees.

The services shall be performed in accordance with Exhibit A (Scope of Services & Project Schedule) attached hereto and incorporated herein by reference. In the event of any inconsistency between Exhibit A and this Agreement, the terms of this Agreement shall control.

Without limiting the foregoing, the Consultant's services shall include, at a minimum:

1. Preparation of a comprehensive written report detailing methodology, assumptions, analysis, findings, and recommendations;

2. Development and delivery of a fully functional, fully editable, and fully transparent fee model, including all supporting calculations and data inputs, which:

    (a) contains no locked, hidden, or protected cells;

    (b) contains no external links, proprietary dependencies, or inaccessible formulas;

    (c) contains no macros, scripts, or embedded code that are not fully disclosed and accessible to the City;

    (d) clearly identifies all inputs, assumptions, calculations, and outputs;

    (e) is capable of being independently used, modified, and updated by City staff without assistance from the Consultant; and

    (f) includes all underlying calculations and supporting work papers necessary to understand and replicate the results.

    (g) does not require any external data connections, links, or ongoing integration with Consultant systems;

3. Documentation of all assumptions, methodologies, and data sources used in the analysis;

4. Presentation of findings to City staff and elected officials, and other governing bodies as reasonably requested by the City, including reasonable in-person attendance for significant meetings if requested by the City. If Consultant is required to travel for

provision of Services, Consultant will obtain prior written authorization from City for reimbursement of actual expenses.

5. Provision of training or guidance to City staff sufficient to allow the City to understand and utilize the model and results;

6. Preparation of all Deliverables in a manner that is transparent, reproducible, and capable of being clearly explained and defended to City staff, elected officials, and the public.

All Deliverables shall meet all applicable requirements set forth in Exhibit A, and any failure to meet such requirements shall constitute a failure to perform under this Agreement.

B. Standard of Care. The Consultant shall perform all professional services under this Contract with the professional skill, care, diligence, and competence ordinarily exercised by similarly situated professionals performing similar services under comparable circumstances.

C. Performance of Services. The Consultant shall diligently and timely furnish all labor, materials, and professional services necessary to perform the Project in accordance with this Agreement and Exhibit A. The Consultant shall be responsible for the completeness, accuracy, and internal consistency of all analyses, models, assumptions, and recommendations prepared under this Agreement.

The Consultant shall not include any proprietary restrictions, limitations, or conditions on the City's access to or use of the Deliverables. All Deliverables shall be provided in formats fully accessible to and usable by the City without restriction.

All Deliverables shall be complete, internally consistent, and sufficient to allow the City and any third party to independently understand, evaluate, and replicate the results without reliance on the Consultant. The Consultant shall ensure that all Deliverables, including the written report and the fee model, are fully consistent with one another. In the event of any discrepancy, the Consultant shall promptly correct such discrepancy at no additional cost to the City. Partial, incomplete, or preliminary Deliverables shall not be considered compliant with this Agreement unless expressly accepted in writing by the City.

The Consultant shall not incorporate into any Deliverable any third-party software, tool, license restriction, or proprietary element that limits the City's ability to access, use, modify, or rely upon the Deliverable without additional cost or permission, unless expressly approved in writing by the City.

All Deliverables shall be provided in fully editable, non-proprietary formats acceptable to the City, and no Deliverable shall be provided in a format that restricts the City's ability to access, modify, or use the Deliverable.

D. Project Manager. The Executive Director of Build Mobile, or her designated representative, shall serve as the City's Project Manager and shall coordinate with the Consultant regarding the performance of services under this Contract.

E. Methodology, Data, and Technical Support. The Consultant shall prepare all analyses, models, and recommendations using generally accepted professional methodologies appropriate for governmental cost-of-service and user fee studies.

The Consultant acknowledges that the City will provide certain data and information for use in the study. While the Consultant may rely on such data, the Consultant shall:

1. Review such data for reasonableness and internal consistency;

2. Identify any material gaps, inconsistencies, or assumptions in the data; and

3. Notify the City in writing of any issues that may materially affect the accuracy or reliability of the study.

4. Independently evaluate and validate key assumptions used in the analysis and identify any assumptions that materially impact the results.

5. Clearly identify and explain any adjustments, allocations, rounding, or normalization applied to the data or results.

6. Clearly identify all assumptions used in the analysis, including any assumptions not directly derived from City-provided data.

The Consultant shall not rely on incomplete or obviously inaccurate data without first notifying the City and obtaining direction. The Consultant shall not disclaim or limit responsibility for the results of the study based solely on data provided by the City where the Consultant has failed to identify or raise concerns regarding such data as required herein.

Upon request by the City, the Consultant shall provide timely clarification and explanation of the methodologies, assumptions, and calculations used in the preparation of the study, including participation in meetings, which may occur virtually or in person as reasonably requested by the City, with City staff, elected officials, or the public as reasonably necessary to explain and support

the study findings, including the ability to explain how specific fees were calculated in clear, non-technical terms.

Such clarification, explanation, and participation shall be considered part of the Consultant's basic services and shall not entitle the Consultant to additional compensation unless otherwise agreed in writing.

G. Ownership of Work Product. All Deliverables and work product prepared or provided by the Consultant under this Agreement shall be the sole and exclusive property of the City. The Consultant hereby irrevocably assigns to the City all rights, title, and interest in and to such Deliverables, including all intellectual property rights.

The Consultant shall not assert any ownership interest in the Deliverables and shall not restrict the City's use, modification, reproduction, or distribution of the Deliverables for any governmental purpose.

The Consultant may retain copies of the Deliverables for its records but shall not use, reproduce, or distribute the Deliverables for any other client or purpose without the prior written consent of the City.

II. TERM OF AGREEMENT

This Contract shall commence upon execution by the last party hereto (the "Effective Date") and shall remain in effect until the Services have been fully performed and all Deliverables have been submitted and expressly accepted in writing by the City. Submission of Deliverables alone shall not constitute completion of the Services. Completion shall occur only upon written acceptance by the City in accordance with the requirements of this Contract and Exhibit A, unless earlier terminated as provided herein or extended by written amendment approved by the City.

The Consultant shall perform the Services and deliver all Deliverables in strict accordance with the deadlines set forth in Exhibit A, as may be adjusted only by written amendment executed by the City and the Consultant. Failure to meet any such deadline shall constitute a material breach and default under this Contract and may result, in the City's sole discretion, in rejection of Deliverables, withholding of payment, or termination of this Contract. The City shall have no obligation to accept, approve, or pay for any Deliverables that are not submitted in accordance with the deadlines set forth in Exhibit A or that otherwise fail to comply with the requirements of this Contract.

No delay, act, or omission by the City, including but not limited to review of Deliverables, coordination among departments, or provision of data, shall be deemed to extend the time for

performance or constitute a basis for additional compensation, unless expressly approved in a written amendment executed by the City and the Consultant.

In no event shall this Contract extend beyond one hundred fifty (150) calendar days from the Effective Date, unless expressly extended by written amendment executed by the City and the Consultant. Time is of the essence with respect to all obligations under this Contract. Failure to achieve completion within this period shall constitute a material breach and default under this Contract.

III. COMPENSATION

A. The City shall pay the Consultant for Services performed under this Contract an amount not to exceed $60,490.00 (Sixty Thousand Four Hundred Ninety and 00/100 Dollars) for the entire Project, in accordance with the Fee Schedule attached hereto as Exhibit B and incorporated herein by reference. Payment shall be made only for Services actually performed and Deliverables submitted and accepted in writing by the City, upon submission of properly itemized invoices and supporting documentation in a form acceptable to the City, as determined in the City's sole discretion, and in accordance with the terms of this Contract.

No payment shall be due for partially completed Services or Deliverables unless expressly authorized in writing by the City. Progress payments or percentage-of-completion payments are not permitted unless specifically set forth in Exhibit B. The City shall have no obligation to pay for any Services or Deliverables that are incomplete, deficient, noncompliant, untimely, or not accepted in writing by the City.

The contract price may include a contingency amount for unanticipated work necessary to complete the Services within the original scope of this Contract. Any use of contingency funds must be authorized in writing by the City's Executive Director of Build Mobile prior to the performance of such work, and no contingency funds shall be expended without such prior written approval.

The Consultant acknowledges that the contract amount constitutes full compensation for all Services, including all labor, overhead, administrative costs, coordination, revisions, virtual meetings, and support required under this Contract. No additional compensation shall be due unless expressly authorized by written amendment executed by the City and the Consultant.

B. Notwithstanding the foregoing, the Consultant shall perform no Services under this Contract until receipt of a written Notice to Proceed issued by the City. The Consultant acknowledges and agrees that no compensation shall be due for any Services performed prior to the issuance of a Notice to Proceed.

The Consultant further acknowledges and agrees that no minimum amount of work is guaranteed under this Contract and that the City may elect, in its sole discretion, to issue no Notice to Proceed. The City reserves the right, in its sole discretion, to amend, suspend, reduce, or cancel any Notice to Proceed at any time.

The City shall have no obligation to pay for any Services performed outside the scope of this Contract or not authorized in writing by the City. No course of conduct, communication, or performance by the Consultant shall entitle the Consultant to any additional or implied compensation, equitable adjustment, or other payment unless expressly authorized in a written amendment executed by the City and the Consultant.

IV. METHOD OF PAYMENT

A. The City shall pay the Consultant only upon receipt of a properly submitted invoice and written approval of the invoice by the City's Executive Director of Build Mobile, or her designated representative, confirming that the Services billed have been fully performed in accordance with the requirements of this Contract and that the applicable Deliverables have been submitted and expressly accepted in writing by the City.

B. The Consultant shall submit invoices to the City only for Services actually and fully performed in accordance with Exhibit B (Fee Schedule) attached hereto and incorporated herein by reference. Each invoice shall clearly identify the Services performed, the applicable Deliverables, and the corresponding line items from the Fee Schedule. Invoices that do not strictly comply with the requirements of this Contract may be rejected in the City's sole discretion.

C. Invoices submitted by the Consultant shall be in a form satisfactory to the Executive Director of Build Mobile, as determined in the City's sole discretion, and shall include sufficient detail and supporting documentation to allow the City to verify that the Services billed were properly performed and that all Deliverables meet the requirements of this Contract. The Executive Director of Build Mobile shall have the right to approve, reject, or request additional information regarding any invoice prior to initiating payment. The City shall have no obligation to process or pay any invoice until all requested supporting information has been provided.

D. The City reserves the right to withhold payment, in whole or in part, for any Services that are not performed in accordance with this Contract, for incomplete, deficient, noncompliant, or untimely Deliverables, or for any amounts disputed in good faith by the City. The Consultant shall promptly correct any deficiencies identified by the City at no additional cost, and no payment shall be due until such deficiencies have been corrected to the satisfaction of the City.

E. Payment by the City shall not constitute acceptance of Services or Deliverables, nor shall it be deemed a waiver of any rights or remedies available to the City under this Contract or applicable law.

F. Approved invoices shall be paid within 30 days of receipt. s. The Consultant acknowledges that such procedures are subject to governmental budgeting, appropriation, and payment processes, and that payment shall be subject to availability of appropriated funds unless expressly required by applicable law, and no interest, late fees, or finance charges shall accrue unless expressly authorized by law.

V. CHANGES IN SERVICES AND ADDITIONAL SERVICES

A. Written Amendments Required. No changes to this Contract, including any changes to the scope of Services, Deliverables, schedule, or compensation, shall be made unless such changes are set forth in a written amendment executed by the City's authorized representative and the Consultant.

B. Authorization of Additional Services. If the City's Executive Director of Build Mobile determines that additional services related to the Project are required, the Consultant may be authorized to perform such additional services only after the parties have agreed in writing to the scope of the additional services and the corresponding compensation. Any such additional services and compensation shall be incorporated into this Contract by written amendment executed by both the City and the Consultant prior to the commencement of the additional services.

The City shall have no obligation to pay for any additional services performed prior to execution of such written amendment, regardless of whether the City had knowledge of, requested, or received the benefit of such services.

Notwithstanding the foregoing, no additional compensation shall be paid for services required as a result of any error, omission, or negligence, or failure of the Consultant to comply with the requirements of this Contract**.**

No course of conduct, oral direction, email communication, meeting discussion, or other informal communication shall be construed as authorization for additional services or compensation, nor shall any such actions give rise to any implied or constructive change, unless confirmed in a written amendment to this Contract executed by the City.

C. Revisions and Coordination. The Consultant acknowledges that the Services contemplated under this Contract include reasonable coordination with City staff and timely revisions to draft

Deliverables. Such coordination, revisions, clarifications, presentations, and responses to questions from City staff, elected officials, or the public shall be considered part of the Consultant's basic Services under this Contract and shall not entitle the Consultant to additional compensation unless such services are determined by the City, in its sole discretion, to materially expand the scope of work and are authorized in advance by written amendment to this Contract.

D. City Review and Coordination. The Consultant acknowledges that the City's review of draft materials, internal coordination among departments, and review by elected officials may require additional time. Such review periods shall not constitute a delay, change in scope, or constructive change, and shall not entitle the Consultant to any additional compensation unless otherwise expressly authorized by written amendment to this Contract.

VI. LIABILITY OF CONSULTANT

A. Indemnification. To the fullest extent permitted by law, the Consultant shall defend, indemnify, hold harmless, protect, and exonerate the City of Mobile, Alabama, and its officers, officials, employees, agents, and representatives (collectively, the "City") from and against any and all claims, demands, suits, actions, damages, losses, liabilities, judgments, awards, liens, costs, expenses, and attorneys' fees, but only to the extent caused by the negligent acts, errors, omissions, breach of contract, or other wrongful conduct of the Consultant, its officers, employees, agents, subcontractors, suppliers, or any person or entity for whom the Consultant is legally responsible, arising out of or related to the performance of Services under this Contract. This indemnification obligation includes, without limitation, the costs of enforcing this provision.

This obligation applies to claims for personal injury, bodily injury, sickness, disease, death, damage to property (including loss of use), economic loss, violations of third-party rights, and includes all costs of defense, including reasonable attorneys' fees.

The Consultant's duty to defend shall apply immediately upon written notice from the City and shall continue until final resolution of the claim; provided, however, that the City shall retain the right to participate in or assume control of the defense of any claim, at its sole discretion.
Notwithstanding the foregoing, nothing in this Contract shall be construed to require the Consultant to indemnify or defend the City for the City's negligence, consistent with applicable Alabama law.

The Consultant represents that it is not a design professional within the meaning of § 41-9A-3, Code of Alabama (1975). The obligations of the Consultant under this Section shall not be limited by the availability or amount of any insurance maintained by the Consultant.

Consultant shall not be held liable for factors outside of its reasonable control, including losses or damages as a result of City's provision of inaccurate data, or changing laws, regulations, political conditions. To the extent permitted by law, except for actions or claims resulting from Consultant's gross negligence or intentional or willful misconduct, Consultant's total aggregate liability to City shall be limited to the amount of compensation paid by City to Consultant under this Agreement in the twelve (12) months prior to the action giving rise to liability.

B. Limitation on Consultant Recovery. In no event shall the Consultant be entitled to recover from the City any indirect, incidental, consequential, special, or punitive damages, including but not limited to lost profits, loss of business, or loss of opportunity, arising out of or relating to this Agreement, regardless of the theory of liability.

C. Survival. The provisions of this Section shall survive the expiration or termination of this Agreement.

VII. CONSULTANT'S INSURANCE.

The Consultant shall procure and continuously maintain at its sole cost and expense Professional Liability Insurance (Errors and Omissions) covering the professional services performed under this Contract. The insurance required under this Section shall not be construed to limit the Consultant's liability under this Contract.

A. Professional Liability Coverage. The Consultant shall maintain Professional Liability Insurance with limits of not less than One Million Dollars ($1,000,000) per claim and Two Million Dollars ($2,000,000) aggregate covering claims arising out of negligent acts, errors, or omissions in the performance of professional services under this Contract.

B. Claims-Made Coverage. If the Professional Liability policy is written on a claims-made basis, the policy shall have a retroactive date prior to the Effective Date of this Contract and shall be continuously maintained in full force and effect during the term of this Contract and for a period of not less than two (2) years after completion of the services under this Contract, either through renewal of the policy or the purchase of an extended reporting period. There shall be no lapse or gap in coverage.

C. Certificates of Insurance. The Consultant shall provide the City with a certificate of insurance in standard ACORD format evidencing the required Professional Liability coverage prior to commencing services under this Contract. The certificate shall identify the Project name and list the City of Mobile as certificate holder as follows:

City of Mobile
P.O. Box 1827
Mobile, Alabama 36633

Upon request, the Consultant shall provide copies of applicable insurance policies or endorsements evidencing compliance with this Section.

D. Cancellation or Material Change. The Consultant shall provide the City with not less than thirty (30) days' prior written notice, or as much notice as is reasonably available, of any cancellation, non-renewal, or material reduction in coverage of the required insurance. Failure to maintain the required insurance shall constitute a material breach of this Contract.

E. Deductibles and Self-Insured Retentions. Any deductible or self-insured retention under the Professional Liability policy shall be the sole responsibility of the Consultant and shall be subject to prior written approval by the City.

F. Insurer Qualifications. All insurance required under this Contract shall be placed with insurers authorized to do business in the State of Alabama and having a minimum A.M. Best rating of A- VII or better.

G. No Limitation of Liability. The insurance requirements set forth herein shall not be construed to limit or restrict the liability of the Consultant under this Contract.

VIII. RESPONSIBILITIES OF THE CONSULTANT

A. Personnel Qualifications. The personnel assigned by the Consultant to perform the Services under this Contract shall comply with the terms set forth herein. The Consultant shall ensure that all key personnel, support personnel, and other agents are fully qualified and capable of performing their assigned tasks. Any change or substitution of key personnel shall require the prior written approval of the City's Executive Director of Build Mobile. Any proposed replacement personnel shall be reasonably comparable in experience and qualifications to the personnel originally assigned to the Project.

B. Subconsultants. The Consultant shall not engage any subcontractors or subconsultants without the prior written approval of the City. The Consultant shall be fully responsible for the acts, errors, omissions, and performance of all subcontractors and subconsultants and shall ensure that all such parties comply with the terms and conditions of this Agreement. No subcontracting shall relieve the Consultant of any obligation under this Agreement.

C. Communication and Responsiveness. The Consultant shall respond to communications from the City within three (3) working days, unless a shorter response time is specified by the City or circumstances reasonably require a more immediate response. Failure to comply with this requirement may be considered a material failure to perform under this Contract. The Consultant shall also promptly notify the City of any issue, delay, or circumstance that may affect the performance of Services or the timely delivery of Deliverables.

D. Anti-Contingent Fee Certification. The Consultant warrants that it has not employed or retained any company or person, other than a bona fide employee working solely for the Consultant, to solicit or secure this Contract, and that it has not paid or agreed to pay any person, company, corporation, individual, or firm, other than a bona fide employee working solely for the Consultant, any fee, commission, percentage, gift, or other consideration contingent upon or resulting from the award of this Contract. A breach of this provision shall constitute grounds for termination of this Contract and recovery of any amounts paid by the City.

E. Professional Conduct. The Consultant agrees that it and its employees shall communicate with City employees and members of the public in a professional and civil manner. All aspects of the Consultant's performance under this Contract, including complaints received from City employees or members of the public, may be considered by the City in determining whether to renew, suspend, or terminate this Contract. Unprofessional conduct or failure to maintain appropriate standards of communication may constitute a breach of this Contract. The City further reserves the right to suspend or debar the Consultant from consideration for future contracts in accordance with applicable Alabama law.

F. Compliance With Laws. The Consultant shall comply with all applicable federal, state, and local laws, regulations, and ordinances in the performance of Services under this Contract and shall not discriminate on the basis of race, color, religion, sex, national origin, or any other classification protected by law.

G. Records, Audit, and Inspection. The Consultant shall maintain complete and accurate books, records, documents, and other evidence directly pertaining to or connected with the Services performed under this Contract. Such records shall be maintained for a period of five (5) years after final payment and shall be made available for inspection, audit, and copying by the City or its authorized representatives during normal business hours upon reasonable notice, or without notice where reasonably necessary to protect the City's interests. These requirements shall also apply to any subcontractors or subconsultants engaged by the Consultant. The City shall have the right to audit, test, and validate any models, calculations, or methodologies used in the preparation of the Deliverables.

H. Independent Contractor Status. The Consultant is, and shall remain, an independent contractor in the performance of all work, Services, and activities under this Contract. The Consultant is not an employee, agent, or servant of the City and shall not represent itself as such. All persons engaged in work performed pursuant to this Contract shall be under the sole direction, supervision, and control of the Consultant. The Consultant shall be solely responsible for providing compensation, benefits, and insurance for its employees. The Consultant shall have no authority to bind the City to any agreement or obligation. The Consultant shall be solely responsible for all taxes, withholdings, and other statutory or contractual obligations of any sort.

I. Support of Study Findings. Upon reasonable request by the City, the Consultant shall provide reasonable assistance to the City in explaining and supporting the analyses, methodologies, and conclusions contained in the study prepared under this Agreement. Such assistance may include participation in virtual meetings and reasonable in-person meetings with City staff, elected officials, governing bodies, or members of the public, and providing clarification of the methodologies, assumptions, and calculations used in the preparation of the study. The Consultant shall make reasonable efforts to be available for such support within the timeframe requested by the City. Failure to provide such support may be considered a material failure to perform under this Contract. If Consultant is required to travel for provision of Services, Consultant must obtain prior written authorization from City for reimbursement of actual expenses.

Any such assistance requested by the City within one (1) year after delivery of the final report shall be considered part of the Consultant's Services under this Agreement and shall not entitle the Consultant to additional compensation unless otherwise agreed in writing.

J. Public Records and Confidentiality. The Consultant acknowledges that the City is subject to Alabama public records laws. All Deliverables and materials provided under this Agreement may be subject to disclosure.

The Consultant shall clearly identify any information it considers confidential at the time of submission; however, the City makes no representation that such information will be exempt from disclosure.

The Consultant shall not include any confidential, proprietary, or restricted information in Deliverables unless necessary for performance of the Services and approved by the City.

Nothing in this Section shall be construed to limit the City's obligations under applicable public records laws.

IX. TIME FOR PERFORMANCE

Time is of the essence in the performance of this Contract. The Consultant shall commence work upon receipt of a written Notice to Proceed issued by the City and shall not begin work prior to such notice.

The Consultant shall diligently and timely perform the Services in strict accordance with the requirements of this Contract and shall complete the Project in strict accordance with the Project Schedule set forth in Exhibit A, attached hereto and incorporated herein by reference. Failure to perform in accordance with the Project Schedule shall constitute a material breach and default under this Contract.

Completion of the Project shall occur only upon the delivery of all required reports, analyses, models, and other Deliverables set forth in Exhibit A and written acceptance of such Deliverables by the City.

The Consultant shall promptly notify the City in writing of any circumstance that may materially affect the schedule for performance of the Services. Such notice shall not relieve the Consultant of its obligation to perform in accordance with the Project Schedule unless an adjustment to the schedule is expressly approved in a written amendment to this Contract executed by the City.

No delay, act, or omission by the City, including but not limited to review of Deliverables or coordination among departments, shall be deemed to extend the Project Schedule or constitute a basis for additional compensation unless expressly authorized by written amendment to this Contract.

The Consultant acknowledges that the City's review of draft materials and internal coordination among departments may require additional time, and such review periods shall not constitute a delay in performance, a change in scope, or a constructive change, and shall not entitle the Consultant to any additional compensation unless otherwise expressly authorized by written amendment to this Contract.

X. FORCE MAJEURE

Neither party shall be considered in default of its obligations under this Contract to the extent that performance is prevented or delayed by events beyond the reasonable control of the affected party and not caused by the negligence, fault, or failure to act of the affected party, including but not limited to acts of God, hurricanes, floods, fires, epidemics, war, terrorism, civil disturbances, or governmental orders ("Force Majeure Event").

The party affected by a Force Majeure Event shall provide prompt written notice to the other party of the nature of the event, the anticipated duration of the delay, and the steps being taken to mitigate the impact of the event. Failure to provide such notice within a reasonable time shall preclude the affected party from claiming relief under this Section to the extent the other party is prejudiced thereby.

The affected party shall use reasonable efforts to mitigate the effects of the Force Majeure Event and to resume performance as soon as practicable, including continuing to perform any portions of the Services not affected by the Force Majeure Event.

A Force Majeure Event shall excuse performance only for the duration and to the extent of the impact of the event and shall not entitle the Consultant to any additional compensation, equitable adjustment, or other payment. The Consultant shall not be entitled to payment for Services not performed as a result of a Force Majeure Event.

Any adjustment to the Project Schedule resulting from a Force Majeure Event must be approved in writing by the City and only to the extent directly attributable to the Force Majeure Event.

If a Force Majeure Event continues for a period of more than sixty (60) days, the City may, upon written notice, terminate this Contract without further obligation, except for payment for Services properly performed and accepted prior to the effective date of termination.

XI. OBLIGATIONS OF CITY

A. City Representative. The City shall designate a Department Head or other authorized representative to act on behalf of the City with respect to this Agreement. Such representative shall have authority to transmit instructions, receive information, and communicate the City's policies and decisions regarding the Services under this Agreement. The City's representative shall not have authority to amend or modify the terms of this Contract, including scope, schedule, or compensation, except through a written amendment executed by an authorized signatory of the City.

B. Information and Data. The City shall make available to the Consultant such information and technical data in the City's possession or control as the City reasonably determines is necessary for the Consultant to perform the Services under this Agreement. The Consultant may rely upon such information and data; however, the Consultant shall exercise appropriate professional judgment in the use of such information and shall promptly notify the City of any errors, omissions, or inconsistencies discovered. The City makes no representations or warranties as to the accuracy or completeness of such information or data. The Consultant's reliance on such information shall not relieve the Consultant of its obligations under this Contract. The City shall

have no liability for any errors, omissions, or inaccuracies in such information or data, and the Consultant's reliance thereon shall not relieve the Consultant of its obligations under this Agreement.

C. Contract Administration. The City's designated representative shall administer this Agreement on behalf of the City and shall perform such administrative functions as are reasonably necessary for the implementation of this Agreement, including but not limited to:

1. Review and approval or rejection of Consultant payment requests; and

2. Periodic review of the Consultant's work and Deliverables during the term of this Agreement.

Any review, approval, acceptance, or payment by the City shall not relieve the Consultant of its responsibility to perform the Services in accordance with this Contract, nor shall it be deemed a waiver of any rights or remedies available to the City.

XII. TERMINATION

A. Termination for Convenience. The City may terminate this Contract at any time upon thirty (30) calendar days' written notice to the Consultant. In the event of such termination, the City shall pay the Consultant for Services properly performed and Deliverables accepted by the City up to the effective date of termination. Such payment shall constitute full compensation, and the Consultant shall not be entitled to any additional compensation, including lost profits, overhead on unperformed work, demobilization costs, or consequential damages.

B. Termination for Default. Any material failure of the Consultant to perform in accordance with the requirements of this Contract, as determined by the City and documented by the City's Executive Director of Build Mobile, shall constitute a default and sufficient grounds for termination.

1. For defaults that are curable, as determined by the City, the Consultant shall be notified in writing and shall have ten (10) working days from receipt of such notice to cure the default, or such shorter period as the City determines is reasonably necessary under the circumstances.

2. For defaults that are not curable, as determined by the City, the City may terminate this Contract upon written notice effective on a date specified by the City.

C. Conversion to Termination for Convenience. If a termination for default is determined to be improper or invalid for any reason, such termination shall be deemed to be a termination for convenience pursuant to Section XII.A.

D. Mutual Termination. The parties may mutually agree to terminate this Contract; however, any such termination must be confirmed in a written agreement executed by the City. In such event, the City shall pay the Consultant for Services properly performed and Deliverables accepted prior to the effective date of termination.

E. Abandonment of Services. If the Consultant abandons performance of the Services under this Contract, the City may terminate this Contract upon three (3) calendar days' written notice to the Consultant indicating its intent to do so. In such event, the City may take such actions as it deems necessary to secure completion of the Services. Payment for Services properly performed and Deliverables accepted prior to abandonment shall be made in accordance with this Section.
The Consultant shall submit all outstanding invoices within one hundred eighty (180) days following termination. Invoices submitted after this period may be rejected by the City.

F. Consultant Termination Rights. The Consultant may terminate this Contract only if the City fails to pay a properly submitted and undisputed invoice within ninety (90) calendar days after approval by the City's Executive Director of Build Mobile, or if the Project is suspended by the City for a continuous period exceeding ninety (90) calendar days. The Consultant shall have no right to suspend or delay performance of the Services pending any such termination.

G. Right to Withhold Payment. After consultation with and written notice to the Consultant providing a reasonable opportunity to cure, the City may withhold payment, in whole or in part, if:

1. The quality of the Consultant's work does not conform to the requirements of this Contract;

2. The quantity of work delivered does not correspond to the Consultant's payment request;

3. Claims have been made, or are likely to be made, against the City or its property arising from the Consultant's work;

4. The Consultant has caused damage to the City or a third party; or

5. The Consultant has failed or refused to perform any obligation under this Contract.

The City's exercise of its right to withhold payment shall not waive any other rights or remedies available under this Contract or applicable law.

H. Transition and Delivery of Work Product. Upon termination of this Contract for any reason, the Consultant shall promptly deliver to the City all work product, Deliverables, data, reports, and materials prepared under this Contract, whether complete or in progress, and shall reasonably cooperate with the City to facilitate an orderly transition of the Services. The Consultant shall not withhold any such materials pending payment or for any other reason.

XIII. DISPUTE RESOLUTION

A. Informal Resolution. In the event of a dispute or claim arising out of or relating to this Agreement, the parties shall first attempt in good faith to resolve the dispute through direct discussions between authorized representatives of the parties. If the dispute is not resolved within thirty (30) calendar days after written notice of the dispute by either party, either party may pursue any remedies available at law or in equity.

B. Litigation and Venue. If the dispute cannot be resolved through direct discussions, any dispute, action, or proceeding arising out of or relating to this Agreement shall be exclusively brought in the state courts located in Mobile County, Alabama, or, where proper subject matter jurisdiction exists, in the United States District Court for the Southern District of Alabama. Each party irrevocably submits to the jurisdiction of such courts and waives any objection based on improper venue, lack of personal jurisdiction, or forum non conveniens. The parties agree that no mediation or arbitration shall be required as a condition precedent to litigation unless expressly agreed to in writing by the City.

C. Waiver of Jury Trial. To the fullest extent permitted by law, the Consultant knowingly, voluntarily, and intentionally waives any right to trial by jury in any litigation arising out of or relating to this Agreement.

D. Governing Law. This Agreement and the rights and obligations of the parties shall be governed by and construed in accordance with the laws of the State of Alabama, without regard to its conflict of laws principles.

E. Continued Performance. Unless otherwise directed in writing by the City, the Consultant shall continue to perform its obligations under this Agreement during the pendency of any dispute or claim arising under this Agreement. The existence of a dispute, including any dispute regarding payment, shall not relieve the Consultant of its obligation to continue performance unless this Contract is terminated in accordance with Section XII. Failure to continue performance as required by this Section shall constitute a material breach of this Contract. The Consultant shall not suspend, delay, or withhold performance of Services for any reason, including any dispute regarding payment, unless this Agreement is terminated in accordance with Section XII.

XIV. CONSULTANT WARRANTY / STANDARD OF CARE

A. Professional Services Standard. The Consultant shall perform all Services under this Agreement using that degree of care, skill, and diligence ordinarily exercised by qualified professionals performing similar services under similar circumstances. All Services shall be performed by qualified personnel in a professional and workmanlike manner.

B. Compliance With Contract Requirements. The Consultant shall perform the Services in strict accordance with the scope of services, specifications, and requirements set forth in this Agreement and its exhibits. The City shall have the right to reject any Services or Deliverables that do not conform to such requirements.

C. Compliance With Laws. The Consultant shall perform all Services in compliance with all applicable federal, state, and local laws, regulations, and ordinances.

D. Correction of Deficient Services. If the City determines that any Services or Deliverables do not conform to the requirements of this Agreement, the City shall provide written notice describing the deficiency. Upon receipt of such notice, the Consultant shall, within a timeframe specified by the City, promptly correct or re-perform the deficient Services at no additional cost to the City. The Consultant's obligation to correct deficient Services shall apply notwithstanding any prior review, approval, acceptance, or payment by the City.

E. Methodology Support of Study Findings. The Consultant represents that the analyses, models, assumptions, and recommendations contained in the study prepared under this Agreement are based upon generally accepted professional methodologies appropriate for governmental cost-of-service and user fee studies and are internally consistent and supported by the underlying data and calculations.

Upon reasonable request by the City, the Consultant shall provide clarification and explanation of the methodologies, assumptions, and calculations used in the preparation of the study, including participation in virtual meetings and reasonable in-person meetings with City staff, elected officials, governing bodies, or members of the public to explain and support the study findings.

Any such assistance requested by the City within one (1) year after delivery of the final report shall be considered part of the Consultant's Services under this Agreement and shall not entitle the Consultant to additional compensation unless expressly authorized in a written amendment to this Contract.

F. Certification of Accuracy. Upon delivery of the final report, the Consultant shall certify in writing that, to the best of its knowledge and professional judgment, the analyses, models, assumptions, and conclusions contained in the Deliverables are accurate, internally consistent, and prepared in accordance with generally accepted professional standards applicable to governmental cost-of-service and user fee studies.

XV. SUSPENSION/STOP WORK ORDER

A. Suspension of Services. The City may, at any time, by written notice to the Consultant, require the Consultant to temporarily suspend all or part of the Services under this Agreement. Upon receipt of such notice, the Consultant shall immediately comply with the terms of the suspension, shall cease performance of the suspended Services, and shall continue performance of any non-suspended Services unless otherwise directed by the City. The Consultant shall take all reasonable steps to minimize costs and protect and preserve all work product, Deliverables, and materials during the period of suspension.

B. Resumption of Services. The Consultant shall not resume suspended Services until directed to do so in writing by the City. Any resumption of Services shall be subject to the terms of this Contract and any written direction issued by the City.

C. City Options During Suspension. The City may, at its option, cancel the suspension and direct the Consultant to resume Services, adjust the Project Schedule, or terminate this Agreement in accordance with the termination provisions contained herein.

D. Compensation During Suspension. Unless otherwise expressly authorized in a written amendment executed by the City and the Consultant, the Consultant shall not be entitled to any additional compensation, damages, equitable adjustment, or costs arising out of or related to the suspension of Services. The City shall only be obligated to pay for Services properly performed and Deliverables accepted prior to the effective date of suspension, and for any Services expressly authorized in writing during the suspension period.

E. Extended Suspension. If the suspension continues for more than ninety (90) calendar days, the Consultant may submit a written request that the City either authorize resumption of the Services or terminate this Agreement. Any decision to resume Services, adjust the Project Schedule, or terminate this Agreement shall be at the sole discretion of the City. The Consultant shall not be entitled to terminate this Agreement or recover any additional compensation as a result of such suspension.

XVI. NOTICES

A. Designated Representatives. The City's authorized representative for purposes of this Agreement shall be:

City: City of Mobile
c/o Shayla Beaco
Chief of Building and Planning
205 Government Street
Mobile, Alabama 36602
shayla.beaco@cityofmobile.gov

Consultant: MGT Impact Solutions, LLC
c/o A. Trey Traviesa, CEO
Consultant's Authorized Agent
4320 West Kennedy Blvd.
Tampa, FL 33609

B. Method of Notice. Any notice required or permitted under this Agreement shall be in writing and shall be deemed sufficient if delivered:

1. By hand delivery;
2. By United States certified mail, return receipt requested, postage prepaid;
3. By a nationally recognized overnight delivery service; or
4. By electronic mail (email), provided that confirmation of transmission or receipt is obtained.

C. Effective Date of Notice. Notices shall be deemed effective:

- Upon delivery, if delivered by hand;
- Three (3) business days after deposit in the United States mail;
- One (1) business day after deposit with an overnight delivery service; or
- On the date of transmission, if sent by email with confirmation of transmission or receipt.
- Refusal to accept delivery, failure to claim mailed notice, or failure to acknowledge receipt of email shall not invalidate the effectiveness of such notice.

D. Change of Address or Representative. Either party may change its designated representative or address for notice by providing written notice in accordance with this Section. Such change shall not be effective until receipt of such notice by the other party.

XVII. DEFAULT

The occurrence of any of the following shall constitute a material default under this Agreement:

1. Failure of the Consultant to materially perform the Services in accordance with the terms of this Agreement;

2. Failure to meet required deadlines or schedules in accordance with the Project Schedule;

3. Failure to perform the Services in accordance with the professional standard of care set forth in this Agreement;

4. Failure to comply with applicable federal, state, or local laws or regulations;

5. Misrepresentation, falsification, or material omission of information provided to the City;

6. Failure to procure or maintain required insurance coverage;

7. Unauthorized assignment or transfer of this Agreement or any interest herein;

8. Failure to correct deficiencies or cure a default after receiving written notice from the City and expiration of any applicable cure period; or

9. Failure to comply with any other material obligation under this Agreement.

XVIII. CITY REMEDIES

Upon the occurrence of a default, the City may, in its sole discretion, exercise any rights or remedies available under this Agreement or at law or in equity, including but not limited to:

1. Requiring the Consultant to cure the default within a specified period;

2. Performing or arranging for performance of the Services and recovering from the Consultant all reasonable costs and expenses thereof, including administrative, legal, and related costs incurred by the City;

3. Terminating the Agreement in accordance with the termination provisions contained herein;

4. Seeking recovery of all damages resulting from the default;

5. Withholding payment of any sums otherwise due under this Agreement until the default has been cured to the satisfaction of the City; and

6. Offsetting any amounts owed by the Consultant against any amounts otherwise due to the Consultant under this Agreement or any other agreement with the City.

The rights and remedies of the City set forth herein are cumulative and in addition to any other rights or remedies available at law or in equity.

Failure of the City to enforce any provision of this Agreement shall not be deemed a waiver of such provision or of the right to enforce such provision thereafter, nor shall any single or partial exercise of any right or remedy preclude any other or further exercise thereof.

XIX. FUTURE CONTRACT ELIGIBILITY

Failure of the Consultant to perform in accordance with the terms and conditions of this Agreement, including failure to meet schedule requirements, provide acceptable Deliverables, or comply with applicable laws and Contract requirements, may be considered by the City in evaluating the Consultant's responsibility, qualifications, and past performance for purposes of future contract awards.

Such performance issues may also be considered by the City in determining whether to suspend or debar the Consultant from participation in future City contracts, in accordance with applicable Alabama law and City policies. Any such determination shall be made in accordance with applicable procedures and due process requirements.

XX. PEER REVIEW

The City reserves the right, at its sole discretion, to engage independent experts to conduct peer reviews of the analyses, methodologies, models, assumptions, calculations, and recommendations prepared under this Agreement.

The Consultant shall fully cooperate with such review, including providing prompt and complete access to all relevant documentation, data, work papers, calculations, assumptions, and electronic models used in the preparation of the Deliverables, in a format reasonably requested by the City.

The Consultant shall, at no additional cost to the City, promptly respond to reasonable comments and questions arising from such peer review and shall correct, revise, or supplement the Deliverables as necessary to address any deficiencies identified that reflect non-compliance with the requirements of this Agreement.

The cost of any peer review conducted by the City shall be borne by the City; however, the Consultant shall not be entitled to any additional compensation, equitable adjustment, or extension of time as a result of such peer review unless expressly authorized in a written amendment to this Contract.

Peer review by the City or its consultants shall not relieve the Consultant of its responsibility for the accuracy, completeness, or compliance of the Services or Deliverables under this Agreement.

XXI. ANTI-BOYCOTT CERTIFICATION

Pursuant to Ala. Code § 41-16-5, the Consultant represents and certifies that it is not currently engaged in, and agrees that for the duration of this Agreement it will not engage in, a boycott of a person or entity based in or doing business with a jurisdiction with which the State of Alabama can enjoy open trade, as defined in § 41-16-5, Code of Alabama (1975). The Consultant acknowledges that a breach of this certification may result in termination of this Agreement and any other remedies available under applicable law.

XXII. NON-DISCRIMINATION

The Consultant shall comply with all applicable federal, state, and local laws concerning nondiscrimination, including but not limited to City of Mobile Ordinance No. 14-034.

Without limiting the foregoing, the Consultant shall not discriminate on the basis of race, creed, color, national origin, disability, or any other classification protected by law, shall require all subcontractors to comply with the same requirements, and shall make every reasonable effort to ensure that fifteen percent (15%) of the work performed under this Agreement is awarded to socially and economically disadvantaged individuals and business entities, in accordance with applicable law and City policy.

Failure to comply with this Section may constitute a material breach of this Agreement.

XXIII. COMPLIANCE WITH IMMIGRATION LAW

By entering into this Agreement, the Consultant represents and certifies that, for the duration of this Agreement, it will not violate federal immigration law and will not knowingly employ, hire for employment, or continue to employ an unauthorized alien within the State of Alabama.

Pursuant to Ala. Code § 31-13-9, if the Consultant employs one or more employees within the State of Alabama, the Consultant shall provide documentation establishing that it is enrolled in the E-Verify program and shall maintain such enrollment for the duration of this Agreement.

The Consultant shall require all subcontractors performing work under this Agreement to comply with the requirements of this Section.

A violation of this Section shall constitute a material breach of this Agreement, and the Consultant shall be responsible for all damages resulting therefrom, in addition to any other remedies available to the City under this Agreement or applicable law.

XXIV. MISCELLANEOUS

A. Construction. The language of this Agreement shall be construed according to its fair meaning and not strictly for or against any party.

B. No Third-Party Beneficiaries. This Agreement is intended solely for the benefit of the parties and does not create any rights, privileges, or causes of action in any third party. Notwithstanding the foregoing, the parties acknowledge that Deliverables are intended to be relied upon by the City and may be disclosed to and relied upon by third parties for governmental, regulatory, and policy purposes without creating contractual privity or limiting the Consultant's obligations under this Agreement.

C. Time of the Essence. Time is of the essence with respect to each and every aspect of the Consultant's performance under this Contract.

D. Cumulative Remedies. The rights and remedies of the City provided under this Agreement are cumulative and in addition to any other rights and remedies available at law or in equity.

E. Joint and Several Liability. If the Consultant is comprised of more than one legal entity, each entity shall be jointly and severally liable under this Agreement.

F. Severability. If any provision of this Agreement is held by a court of competent jurisdiction to be invalid, void, or unenforceable, the remaining provisions shall remain in full force and effect.

G. Authority. The parties represent and warrant that they are duly authorized to enter into and perform this Agreement and that the individuals executing this Agreement have full authority to bind the respective parties.

H. No Waiver by Payment or Acceptance. The City's review, approval, acceptance of, or payment for Services shall not constitute a waiver of any rights or remedies under this Agreement.

I. Headings. Section and paragraph headings are for convenience only and shall not affect the interpretation of this Agreement.

J. Independent Drafting. This Agreement has been reviewed and negotiated by both parties, and no provision shall be construed against either party as the drafter.

K. Binding Effect. This Agreement shall be binding upon and inure to the benefit of the parties and their respective successors and permitted assigns.

L. Counterparts. This Agreement may be executed in counterparts, each of which shall be deemed an original, and all of which together shall constitute one instrument.

M. Amendment and Waiver. This Agreement may be amended only by a written amendment executed by the City and the Consultant. No waiver of any provision shall be effective unless in writing. No waiver of any breach shall be deemed a waiver of any subsequent breach.

N. Attorney's Fees and Costs. If the City is required to enforce this Agreement due to a breach by the Consultant, the Consultant shall reimburse the City for all reasonable attorneys' fees and costs incurred to the extent permitted by Alabama law.

O. Sovereign Immunity. Nothing in this Agreement shall be construed as a waiver of any governmental, sovereign, or other immunity of the City, its officials, or employees.

P. Assignment. The Consultant shall not assign, transfer, or convey this Agreement, or any interest herein, without the prior written consent of the City, which may be granted or withheld in the City's sole discretion. The Consultant shall not assign or transfer any claim, cause of action, or right to payment under this Agreement without the prior written consent of the City.

[Remainder of Page Intentionally Left Blank; Signature Page Follows]

XV. SIGNATURES

By signing below, the parties acknowledge they have read, understood, and agree to abide by the terms of this Contract, including all incorporated exhibits.

CONSULTANT

By: _____
A. Trey Traviesa, CEO

Date: 7/1/2026

State of Florida }
County of Hillsborough }

I, the undersigned Notary Public, in and for said county and state, hereby certify that A. Trey Traviesa [Individual's Name] whose name as CEO [Title] of **MGT Impact Solutions, LLC**, is signed to the foregoing conveyance, and who is known to me, acknowledged before me on this day that, being informed of the contents of the conveyance, he, as such officer and with full authority, executed the same voluntarily for and as the act of said limited liability company.

In witness whereof, I hereunto set my hand and official seal on this ____ day of _____**, 20____**

_____
Notary Public
Print: John Carrozza

My commission expires: _____
(Seal)

CITY OF MOBILE

By: _____
Spiro N. Cheriogotis, Mayor

Date: _____

ATTEST:

_____
City Clerk

EXHIBIT A: SCOPE OF SERVICES & PROJECT SCHEDULE

EXHIBIT B: FEE SCHEDULE

EXHIBIT C: CERTIFICATE OF INSURANCE AND ENDORSEMENTS

EXHIBIT D: E-VERIFY DOCUMENTS [IF APPLICABLE]

XV. SIGNATURES

By signing below, the parties acknowledge they have read, understood, and agree to abide by the terms of this Contract, including all incorporated exhibits.

CONSULTANT

By: _____
A. Trey Traviesa, CEO

Date: 7/1/2026

State of Florida }
County of Hillsborough }

I, the undersigned Notary Public, in and for said county and state, hereby certify that A. Trey Traviesa [Individual's Name] whose name as CEO [Title] of **MGT Impact Solutions, LLC**, is signed to the foregoing conveyance, and who is known to me, acknowledged before me on this day that, being informed of the contents of the conveyance, he, as such officer and with full authority, executed the same voluntarily for and as the act of said limited liability company.

In witness whereof, I hereunto set my hand and official seal on this 1st day of July, 2026

Notary Public State of Florida
John Joseph Carrozza
My Commission HH 426717
Expires 8/2/2027

John J Carrozza
Notary Public
Print: John Carrozza

My commission expires: 8-2-2027
(Seal)

CITY OF MOBILE

By: _____
Spiro N. Cheriogotis, Mayor

Date: _____

ATTEST:

_____
City Clerk

EXHIBIT A:
SCOPE OF SERVICES & PROJECT SCHEDULE



Proposal

APRIL 16, 2026

Comprehensive Development User Fee Study (Build Mobile)

City of Mobile, Alabama

Submitted by:

MIKE ADAMS
MANAGER
4320 WEST KENNEDY BLVD
SUITE 200
TAMPA, FLORIDA 33609
949.310.4470
MADAMS@MGT.US

April 16, 2026

Ms. Shayla Beaco, Chief of Building and Planning
City of Mobile
205 Government Street
Mobile, AL 36602

RE: BUILD MOBILE COMPREHENSIVE COST OF SERVICES / USER FEE STUDY

Dear Ms. Beaco:

At the City's request, MGT Impact Solutions, LLC has prepared this revised scope of services package for the Build Mobile Comprehensive Cost of Services / User Fee Study. This package is intended to support the City's project-specific professional services agreement and to provide contract-ready language suitable for inclusion as agreement exhibits.

The enclosed materials define the project purpose, scope of services, deliverables, assumptions and responsibilities, schedule, and fixed-fee payment milestones for the study. The work remains focused on development-related user fees within Build Mobile and is intended to provide the City with a clear, data-supported basis to determine full cost of service, evaluate current cost recovery, and consider defensible fee recommendations.

This revised package reflects the City's requested structure and aligns the services to the fixed fee previously quoted by MGT for this engagement. It also incorporates the City's requested milestone schedule, draft and final deliverables, presentation and training commitments, and reasonable post-delivery support.

Project Understanding / Purpose

The City seeks a Comprehensive Cost of Services / User Fee Study for Build Mobile development-related services. The study is intended to provide a clear and supportable basis for evaluating the relationship between the City's cost to provide development review and permitting services and the fees currently charged for those services.

The purpose of the study is to:

- determine the full cost of providing development-related services within Build Mobile;
- evaluate current cost recovery levels associated with existing fees; and
- provide defensible, data-supported recommendations regarding user fees for the services included in the study.

This engagement is limited to user fee-related services. It does not include development impact fee analysis unless separately authorized by written amendment. It also does not include peer jurisdiction benchmarking unless separately authorized.

The study will focus on transparent methods, clear documentation, and practical work products that City staff can understand and use after project completion. The final work products will include a fully editable Excel model, a draft and final written report, presentation materials, and staff training on use of the final model and interpretation of study results.

Revised Scope of Services

MGT shall provide the professional services necessary to complete the Build Mobile Comprehensive Cost of Services / User Fee Study. The scope of services shall include the following tasks.

TASK 1.0: **PROJECT MANAGEMENT AND COORDINATION**

MGT shall conduct a kickoff meeting with City staff to confirm project objectives, study boundaries, communication protocols, coordination procedures, and immediate next steps. MGT shall prepare and maintain a project work plan and schedule aligned to the contract milestones.

MGT shall coordinate with the City's designated point of contact regarding data requests, interviews, review meetings, schedule updates, and issue resolution. MGT shall provide periodic status updates and shall promptly identify any issue that may materially affect the scope, schedule, or deliverables.

TASK 2.0: **DEPARTMENT AND SERVICE IDENTIFICATION**

In coordination with the City, MGT shall confirm the departments, divisions, and service areas included in the study for Build Mobile development-related functions. This is expected to include applicable Building, Planning, Engineering, and Fire Prevention development plan review functions, together with related services and fee categories identified by the City for inclusion in the study.

MGT shall identify and document the services, activities, and fee categories to be analyzed and shall work with City staff to identify any proposed new or revised fee categories for City consideration.

TASK 3.0: **FEE FRAMEWORK AND DESIGN**

MGT shall review the City's current fee structures for the included Build Mobile services and work with City staff to confirm the fees and service categories to be analyzed. Based on that review, MGT shall develop a proposed fee framework that identifies the principal cost drivers, service units, and allocation methods to be used in the analysis.

MGT shall present the proposed framework to the City for review before completing model development and shall revise the framework as reasonably needed to reflect City input.

TASK 4.0: **DATA COLLECTION AND VALIDATION**

MGT shall identify the data needed to complete the study and shall provide data request materials and collection templates for City use. Requested data may include staffing information, compensation data, operating cost information, overhead allocation inputs, service descriptions, estimated time by service, transaction volumes, current fee schedules, and other information reasonably necessary for the analysis.

MGT shall review the data provided by the City for reasonableness and internal consistency. If MGT identifies material gaps, assumptions, or limitations that may affect the analysis, MGT shall notify the City in writing and work with City staff to determine how those items will be addressed in the study.

TASK 5.0: **COST-OF-SERVICE ANALYSIS**

Using the data provided and validated through the project, MGT shall develop fully burdened hourly rates for relevant staff positions using personnel cost data, operational cost data, and allocated overhead. MGT shall work with City staff to evaluate the time required to perform the services included in the study, including existing services and any new services identified during the engagement.

MGT shall prepare a cost-of-service analysis that calculates the full cost of providing each service, identifies current fee levels, evaluates cost recovery percentages, and quantifies the relationship between current fee revenue and estimated service cost. Where applicable, MGT shall incorporate service volume information and demand data into the analysis.

If requested by the City within the agreed scope, MGT may also prepare alternative fee scenarios for City review.

TASK 6.0: **MODEL DEVELOPMENT**

MGT shall develop and deliver a fully editable, transparent cost-of-service model in Microsoft Excel, or another format approved by the City. The model shall include all formulas, assumptions, methodologies, and calculations required to understand and update the analysis.

The model shall be structured so City staff can independently review inputs, follow calculations, and revise assumptions over time. The model shall not require proprietary software, separate licenses, or inaccessible tools for the City to access, use, or modify it. The final model shall clearly identify data inputs, calculation logic, and resulting outputs.

TASK 7.0: **DRAFT REVIEW AND REVISIONS**

MGT shall submit draft analysis materials, draft model materials, and a draft report for City review. MGT shall participate in review meetings with City staff, receive comments, and revise draft deliverables as reasonably necessary to address City feedback and prepare final deliverables.

Reasonable revisions, coordination, and review meetings contemplated by this scope are included in the fixed fee.

TASK 8.0: **FINAL REPORT**

MGT shall prepare a comprehensive written report that documents the project purpose, scope, methodology, data sources, assumptions, current fee analysis, cost recovery findings, and recommended fee structures. The report shall include supporting tables, summaries, and graphics as appropriate to explain the analysis and findings clearly.

The final report shall be delivered in PDF and editable format.

TASK 9.0: **PRESENTATIONS AND TRAINING**

MGT shall present preliminary findings to City staff during the draft stage and shall present final findings to City staff and, if requested by the City, to the City Council or other governing body following completion of the final report.

MGT shall also provide one training session for City staff on use of the final Excel model and interpretation of study results. Presentation materials used in support of draft and final presentations shall be included as project deliverables.

Unless otherwise approved by the City in writing, meetings, presentations, and training sessions are assumed to be conducted virtually.

TASK 10.0: **POST-DELIVERY SUPPORT**

For a period of one year following delivery of the final report and final model, MGT shall provide reasonable clarification and explanation of the study, respond to reasonable questions from City staff, and participate in reasonable follow-up discussions requested by the City regarding methodology, model use, or interpretation of results, without additional charge, unless the City requests services outside the agreed scope.

Deliverables

MGT shall provide the following deliverables, at a minimum:

1. **Project Work Plan and Schedule:** A written work plan and project schedule aligned to the contract milestones and Notice to Proceed.

2. **Data Collection Templates:** Data request materials and collection templates for City use in compiling staffing, cost, service, and volume information needed for the study.

3. **Draft Cost-of-Service Model:** A draft Excel-based model showing initial cost-of-service calculations, assumptions, and fee framework for City review.

4. **Final Cost-of-Service Model:** A final fully editable and transparent Excel model that includes inputs, assumptions, formulas, outputs, and sufficient documentation for City staff use and updating.

5. **Draft Report:** A draft written report summarizing project purpose, methodology, assumptions, preliminary analysis, and preliminary fee findings.

6. **Final Report:** A final written report in PDF and editable format incorporating City comments and final analytical results.

7. **Presentation Materials:** Materials used to present preliminary and final findings to City staff and, if requested, City Council or another governing body.

8. **Training Session for City Staff:** One training session on use of the final model and interpretation of study findings.

All deliverables shall be subject to City review and written acceptance in accordance with the Agreement.

Assumptions, Exclusions, and Responsibilities

Assumptions

The scope of services is based on the following assumptions:

- The project is limited to user fee-related services associated with Build Mobile development-related functions.
- The City will designate a primary point of contact to coordinate communications, scheduling, data transmission, and internal review.
- The City will provide reasonably necessary data, documentation, and staff access needed to complete the study.
- The City will coordinate participation by appropriate City staff for interviews, review meetings, validation, and comment resolution.
- The City will review draft deliverables and provide comments within the review periods identified in the project schedule.
- Meetings, presentations, and training are assumed to occur virtually unless the City approves on-site participation in writing.
- The project will proceed on a fixed-fee basis in accordance with the milestone-based payment structure set out below.

Exclusions

Unless separately authorized by written amendment, the following are excluded from the scope of services:

- development impact fee analysis;
- peer jurisdiction benchmarking or peer fee comparison;
- litigation support or expert testimony;

- on-site travel, on-site meetings, or on-site presentations not approved in writing by the City; and
- services outside the scope expressly described in this package or the incorporated agreement exhibits.

City Responsibilities

The City shall:

- provide available data and information reasonably necessary for the study;
- designate a primary point of contact;
- coordinate internal staff participation;
- provide staff access for interviews, validation, and review;
- review deliverables and provide feedback within the schedule periods established for the project; and
- identify requested revisions or questions in a reasonably clear and timely manner.

MGT Responsibilities

MGT shall:

- manage the project and maintain the work plan and schedule;
- identify the data needed for the study and provide collection templates;
- perform the cost-of-service and fee analysis using the agreed study framework;
- prepare transparent and editable work products suitable for City review and use;
- identify material data gaps or issues that may affect the analysis;
- revise draft deliverables as reasonably necessary to address City comments within the agreed scope; and
- provide the required presentations, training, and post-delivery support described in this package.

Nothing in this section is intended to modify the governing terms of the City's professional services agreement. In the event of any inconsistency, the agreement shall control.

Project Schedule

All time periods shall run from the City's written Notice to Proceed. MGT shall perform the services in accordance with the following project schedule:

WORK PLAN TASKS	Month 1				Month 2				Month 3				Month 4				Month 5				Month 6	
	1	2	3	4	1	2	3	4	1	2	3	4	1	2	3	4	1	2	3	4	1	2
1.0 Project Management and Coordination																						
2.0 Department and Service Identification																						
3.0 Fee Framework and Design																						
4.0 Data Collection and Validation																						
5.0 Cost-of-Service Analysis																						
6.0 Model Development																						
7.0 Draft Review and Revisions																						
8.0 Final Report																						
9.0 Presentations and Training																						
10.0 Post-Delivery Support																						

REQUIRED SCHEDULE ANCHORS

- **Kickoff meeting with City staff:** within 10 calendar days of Notice to Proceed.
- **Submission of data request and data collection templates:** within 15 calendar days of Notice to Proceed.
- **Completion of departmental interviews and initial data collection:** within 45 calendar days of Notice to Proceed.
- **Written notice to the City of material data gaps or issues:** within 50 calendar days of Notice to Proceed.
- **Delivery of preliminary analysis and draft cost-of-service model:** within 75 calendar days of Notice to Proceed.
- **Presentation of preliminary findings to City staff:** within 80 calendar days of Notice to Proceed.
- **Submission of draft report and revised model:** within 90 calendar days of Notice to Proceed.
- **City review period:** up to 15 calendar days following draft submission.
- **Incorporation of City comments and revisions:** within 15 calendar days after receipt of City comments.
- **Submission of final report and final model:** within 120 calendar days of Notice to Proceed.
- **Final presentation to City staff and/or City Council, if requested:** within 10 calendar days after final submission.
- **Training session for City staff:** within 15 calendar days after final submission.

- **Outside completion date:** 150 calendar days from Notice to Proceed unless amended in writing.

Fixed Fee and Payment Milestones

The total fixed fee for all services described in this package shall be **$60,490.00**. This amount constitutes full compensation for all services, labor, deliverables, meetings, revisions, presentations, training, coordination, and reasonable post-delivery support included in the scope of services.

Payment shall be made on a milestone basis, subject to submission of the applicable deliverables and written acceptance by the City in accordance with the Agreement.

Milestone	Related Tasks	Basis for Payment	Amount
1	1.0 – 4.0	Completion of project kickoff and coordination activities, department and service identification, fee framework confirmation, submission of data request and data collection templates, and completion of initial interviews and data collection activities	$15,122.50
2	5.0 – 6.0 and 9.0 (preliminary presentation)	Delivery of preliminary cost-of-service analysis, submission of draft cost-of-service model, and presentation of preliminary findings to City staff	$21,171.50
3	7.0 and 6.0 (final model updates)	Incorporation of City comments, completion of revisions, and submission of the revised and final cost-of-service model	$15,122.50
4	8.0 – 10.0 and 9.0 (final presentation and training)	Submission of final report in PDF and editable format, completion of required presentation(s), completion of staff training, and final acceptance of deliverables	$9,073.50

Each invoice shall reference the applicable milestone and shall describe the services performed and deliverables submitted in support of that milestone. No payment shall be due unless and until the deliverables associated with the applicable milestone have been submitted and accepted in writing by the City.

Conclusion

MGT appreciates the opportunity to continue supporting the City of Mobile on this effort and stands ready to coordinate with Build Mobile staff and the City's Legal Department as needed to finalize these materials for contract incorporation.

Regards,



Lawrence Cowan, Chief Operations Officer for Revenue Operations
Authorized to bind the firm

EXHIBIT B:
FEE SCHEDULE



Proposal

APRIL 16, 2026

Comprehensive Development User Fee Study (Build Mobile)

City of Mobile, Alabama

Submitted by:

MIKE ADAMS
MANAGER
4320 WEST KENNEDY BLVD
SUITE 200
TAMPA, FLORIDA 33609
949.310.4470
MADAMS@MGT.US

April 16, 2026

Ms. Shayla Beaco, Chief of Building and Planning
City of Mobile
205 Government Street
Mobile, AL 36602

RE: BUILD MOBILE COMPREHENSIVE COST OF SERVICES / USER FEE STUDY

Dear Ms. Beaco:

At the City's request, MGT Impact Solutions, LLC has prepared this revised scope of services package for the Build Mobile Comprehensive Cost of Services / User Fee Study. This package is intended to support the City's project-specific professional services agreement and to provide contract-ready language suitable for inclusion as agreement exhibits.

The enclosed materials define the project purpose, scope of services, deliverables, assumptions and responsibilities, schedule, and fixed-fee payment milestones for the study. The work remains focused on development-related user fees within Build Mobile and is intended to provide the City with a clear, data-supported basis to determine full cost of service, evaluate current cost recovery, and consider defensible fee recommendations.

This revised package reflects the City's requested structure and aligns the services to the fixed fee previously quoted by MGT for this engagement. It also incorporates the City's requested milestone schedule, draft and final deliverables, presentation and training commitments, and reasonable post-delivery support.

Project Understanding / Purpose

The City seeks a Comprehensive Cost of Services / User Fee Study for Build Mobile development-related services. The study is intended to provide a clear and supportable basis for evaluating the relationship between the City's cost to provide development review and permitting services and the fees currently charged for those services.

The purpose of the study is to:

- determine the full cost of providing development-related services within Build Mobile;
- evaluate current cost recovery levels associated with existing fees; and
- provide defensible, data-supported recommendations regarding user fees for the services included in the study.

This engagement is limited to user fee-related services. It does not include development impact fee analysis unless separately authorized by written amendment. It also does not include peer jurisdiction benchmarking unless separately authorized.

The study will focus on transparent methods, clear documentation, and practical work products that City staff can understand and use after project completion. The final work products will include a fully editable Excel model, a draft and final written report, presentation materials, and staff training on use of the final model and interpretation of study results.

Revised Scope of Services

MGT shall provide the professional services necessary to complete the Build Mobile Comprehensive Cost of Services / User Fee Study. The scope of services shall include the following tasks.

TASK 1.0: **PROJECT MANAGEMENT AND COORDINATION**

MGT shall conduct a kickoff meeting with City staff to confirm project objectives, study boundaries, communication protocols, coordination procedures, and immediate next steps. MGT shall prepare and maintain a project work plan and schedule aligned to the contract milestones.

MGT shall coordinate with the City's designated point of contact regarding data requests, interviews, review meetings, schedule updates, and issue resolution. MGT shall provide periodic status updates and shall promptly identify any issue that may materially affect the scope, schedule, or deliverables.

TASK 2.0: **DEPARTMENT AND SERVICE IDENTIFICATION**

In coordination with the City, MGT shall confirm the departments, divisions, and service areas included in the study for Build Mobile development-related functions. This is expected to include applicable Building, Planning, Engineering, and Fire Prevention development plan review functions, together with related services and fee categories identified by the City for inclusion in the study.

MGT shall identify and document the services, activities, and fee categories to be analyzed and shall work with City staff to identify any proposed new or revised fee categories for City consideration.

TASK 3.0: **FEE FRAMEWORK AND DESIGN**

MGT shall review the City's current fee structures for the included Build Mobile services and work with City staff to confirm the fees and service categories to be analyzed. Based on that review, MGT shall develop a proposed fee framework that identifies the principal cost drivers, service units, and allocation methods to be used in the analysis.

MGT shall present the proposed framework to the City for review before completing model development and shall revise the framework as reasonably needed to reflect City input.

TASK 4.0: **DATA COLLECTION AND VALIDATION**

MGT shall identify the data needed to complete the study and shall provide data request materials and collection templates for City use. Requested data may include staffing information, compensation data, operating cost information, overhead allocation inputs, service descriptions, estimated time by service, transaction volumes, current fee schedules, and other information reasonably necessary for the analysis.

MGT shall review the data provided by the City for reasonableness and internal consistency. If MGT identifies material gaps, assumptions, or limitations that may affect the analysis, MGT shall notify the City in writing and work with City staff to determine how those items will be addressed in the study.

TASK 5.0: **COST-OF-SERVICE ANALYSIS**

Using the data provided and validated through the project, MGT shall develop fully burdened hourly rates for relevant staff positions using personnel cost data, operational cost data, and allocated overhead. MGT shall work with City staff to evaluate the time required to perform the services included in the study, including existing services and any new services identified during the engagement.

MGT shall prepare a cost-of-service analysis that calculates the full cost of providing each service, identifies current fee levels, evaluates cost recovery percentages, and quantifies the relationship between current fee revenue and estimated service cost. Where applicable, MGT shall incorporate service volume information and demand data into the analysis.

If requested by the City within the agreed scope, MGT may also prepare alternative fee scenarios for City review.

TASK 6.0: **MODEL DEVELOPMENT**

MGT shall develop and deliver a fully editable, transparent cost-of-service model in Microsoft Excel, or another format approved by the City. The model shall include all formulas, assumptions, methodologies, and calculations required to understand and update the analysis.

The model shall be structured so City staff can independently review inputs, follow calculations, and revise assumptions over time. The model shall not require proprietary software, separate licenses, or inaccessible tools for the City to access, use, or modify it. The final model shall clearly identify data inputs, calculation logic, and resulting outputs.

TASK 7.0: **DRAFT REVIEW AND REVISIONS**

MGT shall submit draft analysis materials, draft model materials, and a draft report for City review. MGT shall participate in review meetings with City staff, receive comments, and revise draft deliverables as reasonably necessary to address City feedback and prepare final deliverables.

Reasonable revisions, coordination, and review meetings contemplated by this scope are included in the fixed fee.

TASK 8.0: **FINAL REPORT**

MGT shall prepare a comprehensive written report that documents the project purpose, scope, methodology, data sources, assumptions, current fee analysis, cost recovery findings, and recommended fee structures. The report shall include supporting tables, summaries, and graphics as appropriate to explain the analysis and findings clearly.

The final report shall be delivered in PDF and editable format.

TASK 9.0: **PRESENTATIONS AND TRAINING**

MGT shall present preliminary findings to City staff during the draft stage and shall present final findings to City staff and, if requested by the City, to the City Council or other governing body following completion of the final report.

MGT shall also provide one training session for City staff on use of the final Excel model and interpretation of study results. Presentation materials used in support of draft and final presentations shall be included as project deliverables.

Unless otherwise approved by the City in writing, meetings, presentations, and training sessions are assumed to be conducted virtually.

TASK 10.0: **POST-DELIVERY SUPPORT**

For a period of one year following delivery of the final report and final model, MGT shall provide reasonable clarification and explanation of the study, respond to reasonable questions from City staff, and participate in reasonable follow-up discussions requested by the City regarding methodology, model use, or interpretation of results, without additional charge, unless the City requests services outside the agreed scope.

Deliverables

MGT shall provide the following deliverables, at a minimum:

1. **Project Work Plan and Schedule:** A written work plan and project schedule aligned to the contract milestones and Notice to Proceed.

2. **Data Collection Templates:** Data request materials and collection templates for City use in compiling staffing, cost, service, and volume information needed for the study.

3. **Draft Cost-of-Service Model:** A draft Excel-based model showing initial cost-of-service calculations, assumptions, and fee framework for City review.

4. **Final Cost-of-Service Model:** A final fully editable and transparent Excel model that includes inputs, assumptions, formulas, outputs, and sufficient documentation for City staff use and updating.

5. **Draft Report:** A draft written report summarizing project purpose, methodology, assumptions, preliminary analysis, and preliminary fee findings.

6. **Final Report:** A final written report in PDF and editable format incorporating City comments and final analytical results.

7. **Presentation Materials:** Materials used to present preliminary and final findings to City staff and, if requested, City Council or another governing body.

8. **Training Session for City Staff:** One training session on use of the final model and interpretation of study findings.

All deliverables shall be subject to City review and written acceptance in accordance with the Agreement.

Assumptions, Exclusions, and Responsibilities

Assumptions

The scope of services is based on the following assumptions:

- The project is limited to user fee-related services associated with Build Mobile development-related functions.
- The City will designate a primary point of contact to coordinate communications, scheduling, data transmission, and internal review.
- The City will provide reasonably necessary data, documentation, and staff access needed to complete the study.
- The City will coordinate participation by appropriate City staff for interviews, review meetings, validation, and comment resolution.
- The City will review draft deliverables and provide comments within the review periods identified in the project schedule.
- Meetings, presentations, and training are assumed to occur virtually unless the City approves on-site participation in writing.
- The project will proceed on a fixed-fee basis in accordance with the milestone-based payment structure set out below.

Exclusions

Unless separately authorized by written amendment, the following are excluded from the scope of services:

- development impact fee analysis;
- peer jurisdiction benchmarking or peer fee comparison;
- litigation support or expert testimony;

- on-site travel, on-site meetings, or on-site presentations not approved in writing by the City; and
- services outside the scope expressly described in this package or the incorporated agreement exhibits.

City Responsibilities

The City shall:

- provide available data and information reasonably necessary for the study;
- designate a primary point of contact;
- coordinate internal staff participation;
- provide staff access for interviews, validation, and review;
- review deliverables and provide feedback within the schedule periods established for the project; and
- identify requested revisions or questions in a reasonably clear and timely manner.

MGT Responsibilities

MGT shall:

- manage the project and maintain the work plan and schedule;
- identify the data needed for the study and provide collection templates;
- perform the cost-of-service and fee analysis using the agreed study framework;
- prepare transparent and editable work products suitable for City review and use;
- identify material data gaps or issues that may affect the analysis;
- revise draft deliverables as reasonably necessary to address City comments within the agreed scope; and
- provide the required presentations, training, and post-delivery support described in this package.

Nothing in this section is intended to modify the governing terms of the City's professional services agreement. In the event of any inconsistency, the agreement shall control.

Project Schedule

All time periods shall run from the City's written Notice to Proceed. MGT shall perform the services in accordance with the following project schedule:

WORK PLAN TASKS	Month 1				Month 2				Month 3				Month 4				Month 5				Month 6	
	1	2	3	4	1	2	3	4	1	2	3	4	1	2	3	4	1	2	3	4	1	2
1.0 Project Management and Coordination																						
2.0 Department and Service Identification																						
3.0 Fee Framework and Design																						
4.0 Data Collection and Validation																						
5.0 Cost-of-Service Analysis																						
6.0 Model Development																						
7.0 Draft Review and Revisions																						
8.0 Final Report																						
9.0 Presentations and Training																						
10.0 Post-Delivery Support																						

REQUIRED SCHEDULE ANCHORS

- **Kickoff meeting with City staff:** within 10 calendar days of Notice to Proceed.
- **Submission of data request and data collection templates:** within 15 calendar days of Notice to Proceed.
- **Completion of departmental interviews and initial data collection:** within 45 calendar days of Notice to Proceed.
- **Written notice to the City of material data gaps or issues:** within 50 calendar days of Notice to Proceed.
- **Delivery of preliminary analysis and draft cost-of-service model:** within 75 calendar days of Notice to Proceed.
- **Presentation of preliminary findings to City staff:** within 80 calendar days of Notice to Proceed.
- **Submission of draft report and revised model:** within 90 calendar days of Notice to Proceed.
- **City review period:** up to 15 calendar days following draft submission.
- **Incorporation of City comments and revisions:** within 15 calendar days after receipt of City comments.
- **Submission of final report and final model:** within 120 calendar days of Notice to Proceed.
- **Final presentation to City staff and/or City Council, if requested:** within 10 calendar days after final submission.
- **Training session for City staff:** within 15 calendar days after final submission.

- **Outside completion date:** 150 calendar days from Notice to Proceed unless amended in writing.

Fixed Fee and Payment Milestones

The total fixed fee for all services described in this package shall be **$60,490.00**. This amount constitutes full compensation for all services, labor, deliverables, meetings, revisions, presentations, training, coordination, and reasonable post-delivery support included in the scope of services.

Payment shall be made on a milestone basis, subject to submission of the applicable deliverables and written acceptance by the City in accordance with the Agreement.

Milestone	Related Tasks	Basis for Payment	Amount
1	1.0 – 4.0	Completion of project kickoff and coordination activities, department and service identification, fee framework confirmation, submission of data request and data collection templates, and completion of initial interviews and data collection activities	$15,122.50
2	5.0 – 6.0 and 9.0 (preliminary presentation)	Delivery of preliminary cost-of-service analysis, submission of draft cost-of-service model, and presentation of preliminary findings to City staff	$21,171.50
3	7.0 and 6.0 (final model updates)	Incorporation of City comments, completion of revisions, and submission of the revised and final cost-of-service model	$15,122.50
4	8.0 – 10.0 and 9.0 (final presentation and training)	Submission of final report in PDF and editable format, completion of required presentation(s), completion of staff training, and final acceptance of deliverables	$9,073.50

Each invoice shall reference the applicable milestone and shall describe the services performed and deliverables submitted in support of that milestone. No payment shall be due unless and until the deliverables associated with the applicable milestone have been submitted and accepted in writing by the City.

Conclusion

MGT appreciates the opportunity to continue supporting the City of Mobile on this effort and stands ready to coordinate with Build Mobile staff and the City's Legal Department as needed to finalize these materials for contract incorporation.

Regards,



Lawrence Cowan, Chief Operations Officer for Revenue Operations
Authorized to bind the firm

ACORD

CERTIFICATE OF LIABILITY INSURANCE

DATE (MM/DD/YYYY)
6/29/2026

THIS CERTIFICATE IS ISSUED AS A MATTER OF INFORMATION ONLY AND CONFERS NO RIGHTS UPON THE CERTIFICATE HOLDER. THIS CERTIFICATE DOES NOT AFFIRMATIVELY OR NEGATIVELY AMEND, EXTEND OR ALTER THE COVERAGE AFFORDED BY THE POLICIES BELOW. THIS CERTIFICATE OF INSURANCE DOES NOT CONSTITUTE A CONTRACT BETWEEN THE ISSUING INSURER(S), AUTHORIZED REPRESENTATIVE OR PRODUCER, AND THE CERTIFICATE HOLDER.

IMPORTANT: If the certificate holder is an ADDITIONAL INSURED, the policy(ies) must have ADDITIONAL INSURED provisions or be endorsed. If SUBROGATION IS WAIVED, subject to the terms and conditions of the policy, certain policies may require an endorsement. A statement on this certificate does not confer rights to the certificate holder in lieu of such endorsement(s).

PRODUCER
Alliant Insurance Services, Inc.
32 Old Slip
New York NY 10005

License#: 812008

CONTACT NAME: Brady Campbell
PHONE (A/C, No, Ext): **FAX (A/C, No):**
E-MAIL ADDRESS: brady.campbell@alliant.com

INSURER(S) AFFORDING COVERAGE	NAIC #
INSURER A : Atlantic Specialty Insurance C	27154
INSURER B : Indian Harbor Insurance Compan	36940
INSURER C : Westchester Fire Insurance Com	10030
INSURER D :	
INSURER E :	
INSURER F :	

INSURED
MGTCONS-01
TVG-MGT Holdings, LP.
MGT Impact Solutions, LLC
4320 West Kennedy Blvd
Tampa FL 33609

COVERAGES **CERTIFICATE NUMBER:** 132690216 **REVISION NUMBER:**

THIS IS TO CERTIFY THAT THE POLICIES OF INSURANCE LISTED BELOW HAVE BEEN ISSUED TO THE INSURED NAMED ABOVE FOR THE POLICY PERIOD INDICATED. NOTWITHSTANDING ANY REQUIREMENT, TERM OR CONDITION OF ANY CONTRACT OR OTHER DOCUMENT WITH RESPECT TO WHICH THIS CERTIFICATE MAY BE ISSUED OR MAY PERTAIN, THE INSURANCE AFFORDED BY THE POLICIES DESCRIBED HEREIN IS SUBJECT TO ALL THE TERMS, EXCLUSIONS AND CONDITIONS OF SUCH POLICIES. *LIMITS SHOWN MAY HAVE BEEN REDUCED BY PAID CLAIMS. LIMITS SHOWN ARE INCLUSIVE OF AMOUNTS REQUESTED BY THE CERTIFICATE HOLDER AND MAY NOT REFLECT POLICY LIMIT AMOUNTS IN EXCESS OF THOSE REQUESTED. ***Not Applicable in WY**

INSR LTR	TYPE OF INSURANCE	ADDL INSD	SUBR WVD	POLICY NUMBER	POLICY EFF (MM/DD/YYYY)	POLICY EXP (MM/DD/YYYY)	LIMITS	
A	X **COMMERCIAL GENERAL LIABILITY** CLAIMS-MADE [X] OCCUR GEN'L AGGREGATE LIMIT APPLIES PER: POLICY [ ] PRO-JECT [X] LOC OTHER:			711018731-0001	5/12/2026	5/12/2027	EACH OCCURRENCE DAMAGE TO RENTED PREMISES (Ea occurrence) MED EXP (Any one person) PERSONAL & ADV INJURY GENERAL AGGREGATE PRODUCTS - COMP/OP AGG $	$ 1,000,000 $ 1,000,000 $ 15,000 $ 1,000,000 $ 2,000,000 $ 2,000,000 $
A	**AUTOMOBILE LIABILITY** X ANY AUTO OWNED AUTOS ONLY [ ] SCHEDULED AUTOS HIRED AUTOS ONLY [ ] NON-OWNED AUTOS ONLY X Phys. Damage [ ]			711018731-0001	5/12/2026	5/12/2027	COMBINED SINGLE LIMIT (Ea accident) BODILY INJURY (Per person) BODILY INJURY (Per accident) PROPERTY DAMAGE (Per accident) Comp/Coll Ded.	$ 1,000,000 $ $ $ $ 1,000
A	X **UMBRELLA LIAB** [X] OCCUR **EXCESS LIAB** [ ] CLAIMS-MADE DED [ ] RETENTION $			711018731-0001	5/12/2026	5/12/2027	EACH OCCURRENCE AGGREGATE $	$ 10,000,000 $ 10,000,000 $
A	**WORKERS COMPENSATION AND EMPLOYERS' LIABILITY** Y / N ANYPROPRIETOR/PARTNER/EXECUTIVE OFFICER/MEMBER EXCLUDED? [N] **(Mandatory in NH)** If yes, describe under DESCRIPTION OF OPERATIONS below	N / A		406050672-0000	5/12/2026	5/12/2027	X PER STATUTE [ ] OTH-ER E.L. EACH ACCIDENT E.L. DISEASE - EA EMPLOYEE E.L. DISEASE - POLICY LIMIT	 $ 1,000,000 $ 1,000,000 $ 1,000,000
B C	Professional/Cyber/Tech E&O Crime Coverage			MTP904872901 G75644553001	5/12/2026 5/12/2026	5/12/2027 5/12/2027	Each Claim/Aggregate LIMIT RETENTION	$5,000,000 $3,000,000 $25,000

DESCRIPTION OF OPERATIONS / LOCATIONS / VEHICLES (ACORD 101, Additional Remarks Schedule, may be attached if more space is required)
Evidence of Insurance

CERTIFICATE HOLDER

City of Mobile
P.O. Box 1827
Mobile AL 36633

CANCELLATION

SHOULD ANY OF THE ABOVE DESCRIBED POLICIES BE CANCELLED BEFORE THE EXPIRATION DATE THEREOF, NOTICE WILL BE DELIVERED IN ACCORDANCE WITH THE POLICY PROVISIONS.

AUTHORIZED REPRESENTATIVE



ACORD 25 (2025/12) **© 1988-2025 ACORD CORPORATION. All rights reserved.**
The ACORD name and logo are registered marks of ACORD

Company ID Number: 1829413

THE E-VERIFY MEMORANDUM OF UNDERSTANDING FOR WEB SERVICES EMPLOYERS

ARTICLE I PURPOSE AND AUTHORITY

The parties to this Agreement are the Department of Homeland Security (DHS) and MGT Impact Solutions, LLC (Web Services Employer). The purpose of this agreement is to set forth terms and conditions which the Web Services Employer will follow while participating in E-Verify.

A Web Services Employer is an Employer who verifies employment authorization for its newly hired employees using a Web Services interface.

E-Verify is a program that electronically confirms a newly hired employee's authorization to work in the United States after completion of the Form I-9, Employment Eligibility Verification (Form I-9). This MOU explains certain features of the E-Verify program and describes specific responsibilities of the Web Services Employer, DHS, and the Social Security Administration (SSA).

For purposes of this MOU, the "E-Verify browser" refers to the website that provides direct access to the E-Verify system: https://E-Verify.uscis.gov/emp/. You may access E-Verify directly free of charge via the E-Verify browser.

Authority for the E-Verify program is found in Title IV, Subtitle A, of the Illegal Immigration Reform and Immigrant Responsibility Act of 1996 (IIRIRA), Pub. L. 104-208, 110 Stat. 3009, as amended (8 U.S.C. § 1324a note). The Federal Acquisition Regulation (FAR) Subpart 22.18, "Employment Eligibility Verification" and Executive Order 12989, as amended, provide authority for Federal contractors and subcontractors (Federal contractor) to use E-Verify to verify the employment eligibility of certain employees working on Federal contracts.

Before accessing E-Verify using Web Services access, the Web Services Employer must meet certain technical requirements. This will require the investment of significant amounts of resources and time. If the Web Services Employer is required to use E-Verify prior to completion and acceptance of its Web Services interface, then it must use the E-Verify browser until it is able to use its Web Services interface. The Web Services Employer must also maintain ongoing technical compatibility with E-Verify.

DHS accepts no liability relating to the Web Services Employer's development or maintenance of any Web Services access system.

ARTICLE II
RESPONSIBILITIES

A. RESPONSIBILITIES OF THE WEB SERVICES EMPLOYER

1. By enrolling in E-Verify and signing the applicable MOU, the Web Services Employer asserts that it is a legitimate company which intends to use E-Verify for legitimate purposes only and in accordance with the laws, regulations, and DHS policies and procedures relating to the use of E-Verify.

2. The Web Services Employer agrees to display the following notices supplied by DHS in a prominent place that is clearly visible to prospective employees and all employees who are to be verified through the system:

   a. Notice of E-Verify Participation

   b. Notice of Right to Work

3. The Web Services Employer agrees to provide to the SSA and DHS the names, titles, addresses, and telephone numbers of the Web Services Employer representatives to be contacted about E-Verify. The Web Services Employer also agrees to keep such information current by providing updated information to SSA and DHS whenever the representatives' contact information changes.

4. The Web Services Employer agrees to grant E-Verify access only to current employees who need E-Verify access. Web Services Employers must promptly terminate an employee's E-Verify access if the employer is separated from the company or no longer needs access to E-Verify.

5. The Web Services Employer agrees to become familiar with and comply with the most recent version of the E-Verify User Manual. The Web Services Employer will ensure that outdated manuals are promptly replaced with the new version of the E-Verify User Manual when it becomes available.

6. The Web Services Employer agrees that any person accessing E-Verify on its behalf is trained on the most recent E-Verify policy and procedures.

7. The Web Services Employer agrees that any of its representatives who will create E-Verify cases will complete the E-Verify Tutorial before creating any cases.

   a. The Web Services Employer agrees that all of its representatives will take the refresher tutorials when prompted by E-Verify in order to continue using E-Verify. Failure to complete a refresher tutorial will prevent the Employer Representative from continued use of E-Verify.

8. The Web Services E-Verify Employer Agent agrees to obtain the necessary equipment to use E- Verify as required by the E-Verify rules and regulations as modified from time to time.

9. The Web Services E-Verify Employer Agent agrees to, consistent with applicable laws, regulations, and policies, commit sufficient personnel and resources to meet the requirements of this MOU.

10. The Web Services Employer agrees to comply with current Form I-9 procedures, with two exceptions:

a. If an employee presents a "List B" identity document, the Web Services Employer agrees to only accept "List B" documents that contain a photo. (List B documents identified in 8 C.F.R. § 274a.2(b)(1)(B)) can be presented during the Form I-9 process to establish identity.) If an employee objects to the photo requirement for religious reasons, the Web Services Employer should contact E-Verify at 888-464-4218.

b. If an employee presents a DHS Form I-551 (Permanent Resident Card), Form I-766 (Employment Authorization Document), or U.S. Passport or Passport Card to complete Form I-9, the Web Services Employer agrees to make a photocopy of the document and to retain the photocopy with the employee's Form I-9. The Web Services Employer will use the photocopy to verify the photo and to assist DHS with its review of photo mismatches that employees contest. DHS may in the future designate other documents that activate the photo screening tool.

Note: Subject only to the exceptions noted previously in this paragraph, employees still retain the right to present any List A, or List B and List C, document(s) to complete the Form I-9.

11. The Web Services Employer agrees to record the case verification number on the employee's Form I-9 or to print the screen containing the case verification number and attach it to the employee's Form I-9.

12. The Web Services Employer agrees that, although it participates in E-Verify, the Web Services Employer has a responsibility to complete, retain, and make available for inspection Forms I-9 that relate to its employees, or from other requirements of applicable regulations or laws, including the obligation to comply with the anti-discrimination requirements of section 274B of the INA with respect to Form I-9 procedures.

a. The following modified requirements are the only exceptions to a Web Services Employer's obligation to not employ unauthorized workers and comply with the anti-discrimination provision of the INA: (1) List B identity documents must have photos, as described in paragraph 6 above; (2) When a Web Services Employer confirms the identity and employment eligibility of newly hired employee using E-Verify procedures, it establishes a rebuttable presumption that it has not violated section 274A(a)(1)(A) of the Immigration and Nationality Act (INA) with respect to the hiring of that employee; (3) If the Web Services Employer receives a final nonconfirmation for an employee, but continues to employ that person, the Web Services Employer must notify DHS and the Web Services Employer is subject to a civil money penalty between $550 and $1,100 for each failure to notify DHS of continued employment following a final nonconfirmation; (4) If the Web Services Employer continues to employ an employee after receiving a final nonconfirmation, then the Web Services Employer is subject to a rebuttable presumption that it has knowingly employed an unauthorized alien in violation of section 274A(a)(1)(A); and (5) no E-Verify participant is civilly or criminally liable under any law for any action taken in good faith based on information provided through the E-Verify.

b. DHS reserves the right to conduct Form I-9 compliance inspections, as well as any other enforcement or compliance activity authorized by law, including site visits, to ensure proper use of E-Verify.

13. The Web Services Employer is strictly prohibited from creating an E-Verify case before the employee has been hired, meaning that a firm offer of employment was extended and accepted and Form I-9 was completed. The Employer agrees to create an E-Verify case for new employees within three Employer business days after each employee has been hired (after both Sections 1 and 2 of Form I-9 have been completed), and to complete as many steps of the E-Verify process as are necessary according to the E-Verify User Manual. If E-Verify is temporarily unavailable, the three-day time period will be extended until it is again operational in order to accommodate the Employer's attempting, in good faith, to make inquiries during the period of unavailability. If, however, the Web Services interface is unavailable due to no fault of E-Verify, then the three day time period is not extended. In such a case, the Web Services Employer must use the E-Verify browser during the outage.

14. The Web Services Employer agrees not to use E-Verify for pre-employment screening of job applicants, in support of any unlawful employment practice, or for any other use that this MOU or the E-Verify User Manual does not authorize.

15. The Web Services Employer must use E-Verify for all new employees. The Web Services Employer will not verify selectively and will not verify employees hired before the effective date of this MOU. Employers who are Federal contractors may qualify for exceptions to this requirement as described in Article II.B of this MOU.

16. The Web Services Employer agrees to follow appropriate procedures (see Article III below) regarding tentative nonconfirmations. The Web Services Employer must promptly notify employees in private of the finding and provide them with the notice and letter containing information specific to the employee's E-Verify case. The Web Services Employer agrees to provide both the English and the translated notice and letter for employees with limited English proficiency to employees. The Web Services Employer agrees to provide written referral instructions to employees and instruct affected employees to bring the English copy of the letter to the SSA. The Web Services Employer must allow employees to contest the finding, and not take adverse action against employees if they choose to contest the finding, while their case is still pending. Further, when employees contest a tentative nonconfirmation based upon a photo mismatch, the Employer must take additional steps (see Article III.B below) to contact DHS with information necessary to resolve the challenge.

17. The Web Services Employer agrees not to take any adverse action against an employee based upon the employee's perceived employment eligibility status while SSA or DHS is processing the verification request unless the Employer obtains knowledge (as defined in 8 C.F.R. § 274a.1(l)) that the employee is not work authorized. The Web Services Employer understands that an initial inability of the SSA or DHS automated verification system to verify work authorization, a tentative nonconfirmation, a case in continuance (indicating the need for additional time for the government to resolve a case), or the finding of a photo mismatch, does not establish, and should not be interpreted as, evidence that the employee is not work authorized. In any of such cases, the employee must be provided a full and fair opportunity to contest the finding, and if he or she does so, the employee may not be terminated or suffer any adverse employment consequences based upon the employee's perceived employment eligibility status (including denying, reducing, or extending

work hours, delaying or preventing training, requiring an employee to work in poorer conditions, withholding pay, refusing to assign the employee to a Federal contract or other assignment, or otherwise assuming that he or she is unauthorized to work) until and unless secondary verification by SSA or DHS has been completed and a final nonconfirmation has been issued. If the employee does not choose to contest a tentative nonconfirmation or a photo mismatch or if a secondary verification is completed and a final nonconfirmation is issued, then the Web Services Employer can find the employee is not work authorized and terminate the employee's employment. Employers or employees with questions about a final nonconfirmation may call E-Verify at 1-888-464-4218 (customer service) or 1-888-897-7781 (worker hotline).

18. The Web Services Employer agrees to comply with Title VII of the Civil Rights Act of 1964 and section 274B of the INA as applicable by not discriminating unlawfully against any individual in hiring, firing, employment eligibility verification, or recruitment or referral practices because of his or her national origin or citizenship status, or by committing discriminatory documentary practices. The Web Services Employer understands that such illegal practices can include selective verification or use of E-Verify except as provided in part D below, or discharging or refusing to hire employees because they appear or sound "foreign" or have received tentative nonconfirmations. The Web Services Employer further understands that any violation of the immigration-related unfair employment practices provisions in section 274B of the INA could subject the Web Services Employer to civil penalties, back pay awards, and other sanctions, and violations of Title VII could subject the Web Services Employer to back pay awards, compensatory and punitive damages. Violations of either section 274B of the INA or Title VII may also lead to the termination of its participation in E-Verify. If the Web Services Employer has any questions relating to the anti-discrimination provision, it should contact OSC at 1-800-255-8155 or 1-800-237-2515 (TDD).

19. The Web Services Employer agrees that it will use the information it receives from E-Verify only to confirm the employment eligibility of employees as authorized by this MOU. The Web Services Employer agrees that it will safeguard this information, and means of access to it (such as PINS and passwords), to ensure that it is not used for any other purpose and as necessary to protect its confidentiality, including ensuring that it is not disseminated to any person other than employees of the Web Services Employer who are authorized to perform the Web Services Employer's responsibilities under this MOU, except for such dissemination as may be authorized in advance by SSA or DHS for legitimate purposes.

20. The Web Services Employer agrees to notify DHS immediately in the event of a breach of personal information. Breaches are defined as loss of control or unauthorized access to E-Verify personal data. All suspected or confirmed breaches should be reported by calling 1-888-464-4218 or via email at E-Verify@uscis.dhs.gov. Please use "Privacy Incident – Password" in the subject line of your email when sending a breach report to E-Verify.

21. The Web Services Employer acknowledges that the information it receives from SSA is governed by the Privacy Act (5 U.S.C. § 552a(i)(1) and (3)) and the Social Security Act (42 U.S.C. 1306(a)). Any person who obtains this information under false pretenses or uses it for any purpose other than as provided for in this MOU may be subject to criminal penalties.

22. The Web Services Employer agrees to cooperate with DHS and SSA in their compliance monitoring and evaluation of E-Verify, which includes permitting DHS, SSA, their contractors and other agents, upon reasonable notice, to review Forms I-9 and other employment records and to interview it and its employees regarding the Employer's use of E-Verify, and to respond in a prompt and accurate manner to DHS requests for information relating to their participation in E-Verify.

    a. The Web Services Employer agrees to cooperate with DHS if DHS requests information about the Web Services Employer's interface, including requests by DHS to view the actual interface operated by the Web Services Employer as well as related business documents. The Web Services Employer agrees to demonstrate for DHS the functionality of its interface to E-Verify upon request.

23. The Web Services Employer shall not make any false or unauthorized claims or references about its participation in E-Verify on its website, in advertising materials, or other media. The Employer shall not describe its services as federally-approved, federally-certified, or federally-recognized, or use language with a similar intent on its website or other materials provided to the public. Entering into this MOU does not mean that E-Verify endorses or authorizes your E-Verify services and any claim to that effect is false.

24. The Web Services Employer shall not state in its website or other public documents that any language used therein has been provided or approved by DHS, USCIS or the Verification Division, without first obtaining the prior written consent of DHS.

25. The Web Services Employer agrees that E-Verify trademarks and logos may be used only under license by DHS/USCIS (see M-795 (Web)) and, other than pursuant to the specific terms of such license, may not be used in any manner that might imply that the Employer's services, products, websites, or publications are sponsored by, endorsed by, licensed by, or affiliated with DHS, USCIS, or E-Verify.

26. The Web Services Employer agrees to complete its Web Services interface no later than six months after the date the Web Services Employer signs this MOU. E-Verify considers the interface to be complete once it has been built pursuant to the Interface Control Agreement (ICA), submitted to E-Verify for testing, and approved for system access.

27. The Web Services Employer agrees to perform sufficient maintenance on the Web Services interface in accordance with the requirements listed in the ICA. These requirements include, but are not limited to, updating the Web Services interface to ensure that any updates or enhancements are incorporated no later than six months after the issuance of an ICA. Web Services Employers should be aware that this will require the investment of time and resources. Compliance with the requirements of the ICA must be carried out to the satisfaction of DHS and or its assignees.

28. The Web Services Employer agrees that any system or interface it develops will follow the steps for creating E-Verify cases and processing tentative nonconfirmations, as laid out in the ICA, this MOU and the User Manual, including but not limited to allowing an employer to close an invalid case where appropriate, allowing an employer to refer a tentative nonconfirmation only when an employee chooses to contest a tentative nonconfirmation (no automatic referrals), and referring a tentative nonconfirmation

to the appropriate agency at the time the employer prints the referral letter and provides the letter to the employee. The Web Services Employer understands that any failure to make its system or interface consistent with proper E-Verify procedures can result in DHS terminating the Web Services Employer's agreement and access.

29. The Web Services Employer understands that if it uses E-Verify procedures for any purpose other than as authorized by this MOU, the Web Services Employer may be subject to appropriate legal action and termination of its participation in E-Verify according to this MOU.

B. EMPLOYERS THAT ARE FEDERAL CONTRACTORS WITH THE FAR E-VERIFY CLAUSE

NOTE: If you do not have any Federal contracts at this time, this section does not apply to your company. In the future, if you are awarded a Federal contract that contains the FAR E-Verify clause, then you must comply with each provision in this Section. See 48 C.F.R. 52.222.54 for the text of the FAR E-Verify clause and the E-Verify Supplemental Guide for Federal Contractors for complete information.

1. If the Web Services Employer is a Federal contractor with the FAR E-Verify clause subject to the employment verification terms in Subpart 22.18 of the FAR, it will become familiar with and comply with the most current version of the E-Verify User Manual for Federal Contractors as well as the E-Verify Supplemental Guide for Federal Contractors.

2. In addition to the responsibilities of every employer outlined in this MOU, the Web Services Employer understands that if it is a Federal contractor subject to the employment verification terms in Subpart 22.18 of the FAR it must verify the employment eligibility of any "employee assigned to the contract" (as defined in FAR 22.1801). Once an employee has been verified through E-Verify by the Web Services Employer, the Employer may not create a second case for the employee through E-Verify.

   a. A Web Services Employer that is not enrolled in E-Verify as a Federal contractor at the time of a contract award must enroll as a Federal contractor in the E-Verify program within 30 calendar days of contract award and, within 90 days of enrollment, begin to verify employment eligibility of new hires using E-Verify. The Web Services Employer must verify those employees who are working in the United States, whether or not they are assigned to the contract. Once the Web Services Employer begins verifying new hires, such verification of new hires must be initiated within three business days after the hire date. Once enrolled in E-Verify as a Federal contractor, the Web Services Employer must begin verification of employees assigned to the contract within 90 calendar days after the date of enrollment or within 30 days of an employee's assignment to the contract, whichever date is later.

   b. Web Services Employers enrolled in E-Verify as a Federal contractor for 90 days or more at the time of a contract award must use E-Verify to begin verification of employment eligibility for new hires of the Employer who are working in the United States, whether or not assigned to the contract, within three business days after the date of hire. If the Web Services Employer is enrolled in E-Verify as a Federal contractor for 90 calendar days or less at the time of contract award, the Web Services Employer must, within 90 days of enrollment, begin to use E-Verify to initiate verification of new hires

of the contractor who are working in the United States, whether or not assigned to the contract. Such verification of new hires must be initiated within three business days after the date of hire. A Web Services Employer enrolled as a Federal contractor in E-Verify must begin verification of each employee assigned to the contract within 90 calendar days after date of contract award or within 30 days after assignment to the contract, whichever is later.

c. Federal contractors that are institutions of higher education (as defined at 20 U.S.C. 1001(a)), state or local governments, governments of Federally recognized Indian tribes, or sureties performing under a takeover agreement entered into with a Federal agency under a performance bond may choose to only verify new and existing employees assigned to the Federal contract. Such Federal contractors may, however, elect to verify all new hires, and/or all existing employees hired after November 6, 1986. Web Services Employers in this category must begin verification of employees assigned to the contract within 90 calendar days after the date of enrollment or within 30 days of an employee's assignment to the contract, whichever date is later.

d. Upon enrollment, Web Services Employers who are Federal contractors may elect to verify employment eligibility of all existing employees working in the United States who were hired after November 6, 1986, instead of verifying only those employees assigned to a covered Federal contract. After enrollment, Web Services Employers must elect to verify existing staff following DHS procedures and begin E-Verify verification of all existing employees within 180 days after the election.

e. The Web Services Employer may use a previously completed Form I-9 as the basis for creating an E-Verify case for an employee assigned to a contract as long as:

i. That Form I-9 is complete (including the SSN) and complies with Article II.A.6,

ii. The employee's work authorization has not expired, and

iii. The Web Services Employer has reviewed the Form I-9 information either in person or in communications with the employee to ensure that the employee's Section 1, Form I-9 attestation has not changed (including, but not limited to, a lawful permanent resident alien having become a naturalized U.S. citizen).

f. The Web Services Employer shall complete a new Form I-9 consistent with Article II.A.10 or update the previous Form I-9 to provide the necessary information if:

i. The Web Services Employer cannot determine that Form I-9 complies with Article II.A.10,

ii. The employee's basis for work authorization as attested in Section 1 has expired or changed, or

iii. The Form I-9 contains no SSN or is otherwise incomplete.

Note: If Section 1 of Form I-9 is otherwise valid and up-to-date and the form otherwise complies with Article II.A.10, but reflects documentation (such as a U.S. passport or Form I-551) that expired after completing Form I-9, the Web Services Employer shall not require the production of additional documentation, or use the photo screening tool described in Article II.A.5, subject to any additional or superseding instructions that may be provided on this subject in the E-Verify User Manual.

g. The Web Services Employer agrees not to require a second verification using E-Verify of any assigned employee who has previously been verified as a newly hired employee under this MOU or to authorize verification of any existing employee by any Web Services Employer that is not a Federal contractor based on this Article.

3. The Web Services Employer understands that if it is a Federal contractor, its compliance with this MOU is a performance requirement under the terms of the Federal contract or subcontract, and the Web Services Employer consents to the release of information relating to compliance with its verification responsibilities under this MOU to contracting officers or other officials authorized to review the Employer's compliance with Federal contracting requirements.

C. RESPONSIBILITIES OF SSA

1. SSA agrees to allow DHS to compare data provided by the Web Services Employer against SSA's database. SSA sends DHS confirmation that the data sent either matches or does not match the information in SSA's database.

2. SSA agrees to safeguard the information the Web Services Employer provides through E-Verify procedures. SSA also agrees to limit access to such information, as is appropriate by law, to individuals responsible for the verification of Social Security numbers or responsible for evaluation of E-Verify or such other persons or entities who may be authorized by SSA as governed by the Privacy Act (5 U.S.C. § 552a), the Social Security Act (42 U.S.C. 1306(a)), and SSA regulations (20 CFR Part 401).

3. SSA agrees to provide case results from its database within three Federal Government work days of the initial inquiry. E-Verify provides the information to the Web Services Employer.

4. SSA agrees to update SSA records as necessary if the employee who contests the SSA tentative nonconfirmation visits an SSA field office and provides the required evidence. If the employee visits an SSA field office within the eight Federal Government work days from the date of referral to SSA, SSA agrees to update SSA records, if appropriate, within the eight-day period unless SSA determines that more than eight days may be necessary. In such cases, SSA will provide additional instructions to the employee. If the employee does not visit SSA in the time allowed, E-Verify may provide a final nonconfirmation to the employer.

Note: If a Web Services Employer experiences technical problems, or has a policy question, the Web Services Employer should contact E-Verify at 1-888-464-4218.

D. RESPONSIBILITIES OF DHS

1. After SSA verifies the accuracy of SSA records for employees through E-Verify, DHS agrees to provide the Web Services Employer access to selected data from DHS databases to enable the Web Services Employer to conduct, to the extent authorized by this MOU:

a. Automated verification checks on employees by electronic means, and

b. Photo verification checks (when available) on employees.

2. DHS agrees to provide to the Web Services Employer appropriate assistance with operational problems that may arise during the Web Services Employer's participation in the E-Verify program. DHS agrees to provide the Web Services Employer names, titles, addresses, and telephone numbers of DHS representatives to be contacted during the E-Verify process.

3. DHS agrees to make available to the Web Services Employer at the E-Verify Web site www.E-Verify.gov and on the E-Verify Web browser (https://e-verify.uscis.gov/emp/), instructional materials on E-Verify policies, procedures and requirements for both SSA and DHS, including restrictions on the use of E-Verify. DHS agrees to provide training materials on E-Verify.

4. DHS agrees to provide to the Web Services Employer a notice that indicates the Web Services Employer's participation in the E-Verify program. DHS also agrees to provide to the Web Services Employer anti-discrimination notices issued by the Office of Special Counsel for Immigration-Related Unfair Employment Practices (OSC), Civil Rights Division, U.S. Department of Justice.

5. DHS agrees to issue the Web Services Employer a user identification number and password that permits the Employer to verify information provided by its employees with DHS.

6. DHS agrees to safeguard the information provided to DHS by the Web Services Employer, and to limit access to such information to individuals responsible for the verification of employees' employment eligibility and for evaluation of the E-Verify program, or to such other persons or entities as may be authorized by applicable law. Information will be used only to verify the accuracy of Social Security Numbers and employment eligibility, to enforce the Immigration and Nationality Act (INA) and Federal criminal or anti-discrimination laws, and to administer Federal contracting requirements.

7. DHS agrees to provide a means of automated verification that is designed (in conjunction with SSA verification procedures) to provide confirmation or tentative nonconfirmation of employees' employment eligibility within three Federal Government work days of the initial inquiry.

8. DHS agrees to provide a means of secondary verification (including updating DHS records as necessary) for employees who contest DHS tentative nonconfirmations and photo non-match tentative nonconfirmations that is designed to provide final confirmation or nonconfirmation of the employees' employment eligibility within 10 Federal Government work days of the date of referral to DHS, unless DHS determines that more than 10 days may be necessary. In such cases, DHS will provide additional verification instructions.

9. DHS agrees to provide the Web Services Employer with an Interface Control Agreement (ICA). This document will provide technical requirements that the Web Services Employer must meet to create and maintain a Web Services interface to the Verification Information System (VIS). VIS is a composite information system that provides immigration status verification for government agencies and verification of employment authorization for employers participating in E-Verify.

10. DHS agrees to provide periodic system enhancements to improve the ease and accuracy of E-Verify, as needed. DHS will also provide E-Verify enhancements to comply with applicable laws and regulations. As enhancements occur, Web Services Employers must update their Web Services interface to reflect

system changes within the timelines specified in Article V.A.1. DHS will provide the Web Services Employer with an ICA to support the E-Verify release whenever system enhancements are required.

11. DHS agrees to provide to the Web Services Employer guidance on breach notification and a means by which the Web Services Employer can report any and all suspected or confirmed breaches of owned or used systems or data spills related to E-Verify cases. At this time, if the Employer encounters a suspected or confirmed breach or data spill, it should contact E-Verify at 1-888-464-4218.

12. In the event the Web Services Employer is subject to penalties, DHS will issue a Notice of Adverse Action that describes the specific violations if it intends to suspend or terminate the employer's Web Services interface access. The Web Services Employer agrees that DHS shall not be liable for any financial losses to the Web Services Employer, its employees, or any other party as a result of your account suspension or termination and agrees to hold DHS harmless from any such claims.

ARTICLE III
REFERRAL OF INDIVIDUALS TO SSA AND DHS

A. REFERRAL TO SSA

1. If the Web Services Employer receives a tentative nonconfirmation issued by SSA, the Web Services Employer must print the notice and promptly provide it to the employee so that the employee may determine whether he or she will contest the tentative nonconfirmation. The Web Services Employer must review the tentative nonconfirmation with the employee in private. After the notice has been signed, the Web Services Employer must give a copy of the signed notice to the employee and attach a copy to the employee's Form I-9.

2. The Web Services Employer will refer employees to SSA field offices only as directed by the automated system based on a tentative nonconfirmation, and only after the Web Services Employer records the case verification number, reviews the input to detect any transaction errors, and determines that the employee contests the tentative nonconfirmation. The Web Services Employer will transmit the Social Security Number to SSA for verification again if this review indicates a need to do so. The Web Services Employer will determine whether the employee contests the tentative nonconfirmation as soon as possible after the Employer receives it.

3. If the employee contests an SSA tentative nonconfirmation, the Web Services Employer will provide the employee with a system-generated referral letter and instruct the employee to visit an SSA office within eight Federal Government work days. SSA will electronically transmit the result of the referral to the Web Services Employer within 10 Federal Government work days of the referral unless it determines that more than 10 days is necessary. The Employer agrees to check the E-Verify system regularly for case updates.

4. The Web Services Employer agrees not to ask the employee to obtain a printout from the Social Security Number database (the Numident) or other written verification of the Social Security Number from the SSA.

B. REFERRAL TO DHS

1. If the Web Services Employer receives a tentative nonconfirmation issued by DHS, the Web Services Employer must promptly notify employees in private of the finding and provide them with the notice and letter containing information specific to the employee's E-Verify case. The Web Services Employer also agrees to provide both the English and the translated notice and letter for employees with limited English proficiency to employees. The Web Services Employer must allow employees to contest the finding, and not take adverse action against employees if they choose to contest the finding, while their case is still pending.

2. The Web Services Employer agrees to obtain the employee's response about whether he or she will contest the tentative nonconfirmation as soon as possible after the Web Services Employer receives the tentative nonconfirmation. Only the employee may determine whether he or she will contest the tentative nonconfirmation.

3. The Web Services Employer agrees to refer individuals to DHS only when the employee chooses to contest a tentative nonconfirmation.

4. If the employee contests a tentative nonconfirmation issued by DHS, the Web Services Employer will instruct the employee to contact DHS through its toll-free hotline (as found on the referral letter) within eight Federal Government work days.

5. If the Web Services Employer finds a photo mismatch, the Web Services Employer must provide the photo mismatch tentative nonconfirmation notice and follow the instructions outlined in paragraph 1 of this section for tentative nonconfirmations, generally.

6. The Web Services Employer agrees that if an employee contests a tentative nonconfirmation based upon a photo mismatch, the Web Services Employer will send a copy of the employee's Form I-551, Form I-766, U.S. Passport, or passport card to DHS for review by:

   a. Scanning and uploading the document, or

   b. Sending a photocopy of the document by express mail (furnished and paid for by the employer).

7. The Web Services Employer understands that if it cannot determine whether there is a photo match/ mismatch, the Employer must forward the employee's documentation to DHS as described in the preceding paragraph. The Employer agrees to resolve the case as specified by the DHS representative who will determine the photo match or mismatch.

8. DHS will electronically transmit the result of the referral to the Web Services Employer within 10 Federal Government work days of the referral unless it determines that more than 10 days is necessary.

9. While waiting for case results, the Web Services Employer agrees to check the E-Verify system regularly for case updates.

10. DHS agrees to provide the Web Services Employer with an Interface Control Agreement (ICA).

This document will provide technical requirements that the Web Services Employer must meet to create and maintain a Web Services interface to the Verification Information System (VIS). VIS is a composite information system that provides immigration status verification for government agencies and verification of employment authorization for employers participating in E-Verify.

11. DHS agrees to provide periodic system enhancements to improve the ease and accuracy of E-Verify, as needed. DHS will also provide E-Verify enhancements to comply with applicable laws and regulations. As enhancements occur, Web Services Employers must update their Web Services interface to reflect system changes within the timelines specified in Article V.A.1. DHS will provide the Web Services Employer with an ICA to support the E-Verify release whenever system enhancements are required.

ARTICLE IV
SERVICE PROVISIONS

A. NO SERVICE FEES

1. SSA and DHS will not charge the Employer or the Web Services E-Verify Employer Agent for verification services performed under this MOU. The Employer is responsible for providing equipment needed to make inquiries. To access E-Verify, an Employer will need a personal computer with Internet access.

ARTICLE V
SYSTEM SECURITY AND MAINTENANCE

A. DEVELOPMENT REQUIREMENTS

1. Software developed by Web Services Employers must comply with federally-mandated information security policies and industry security standards to include but not limited to:

   a. Public Law 107-347, "E-Government Act of 2002, Title III, Federal Information Security Management Act (FISMA)," December 2002.

   b. Office of Management and Budget (OMB) Memorandum (M-10-15), "FY 2010 Reporting Instructions for the Federal Information Security Management Act and Agency Privacy Management," April 2010.

   c. National Institute of Standards and Technology (NIST) Special Publication (SP) and Federal Information Processing Standards Publication (FIPS).

   d. International Organization for Standardization/International Electrotechnical Commission (ISO/IEC) 27002, Information Technology — Security Techniques — Code of Practice for Information Security Management.

2. The Web Services Employer agrees to update its Web Services interface to the satisfaction of DHS or its assignees to reflect system enhancements within six months from the date DHS notifies the Web Services User of the system update. The Web Services User will receive notice from DHS in the form

of an Interface Control Agreement (ICA). The Web Services Employer agrees to institute changes to its interface as identified in the ICA, including all functionality identified and all data elements detailed therein.

3. The Web Services Employer agrees to demonstrate progress of its efforts to update its Web Services interface if and when DHS requests such progress reports.

4. The Web Services Employer acknowledges that if its system enhancements are not completed to the satisfaction of DHS or its assignees within six months from the date DHS notifies the Web Services Employer of the system update, then the Web Services Employer's E-Verify account may be suspended, and support for previous releases of E-Verify may no longer be available to the Web Services Employer. The Web Services Employer also acknowledges that DHS may suspend its account after the six-month period has elapsed.

5. The Web Services Employer agrees to incorporate error handling logic into its development or software to accommodate and act in a timely fashion should an error code be returned.

6. The Web Services Employer agrees to complete the technical requirements testing which is confirmed upon receiving approval of test data and connectivity between the Web Services Employer and DHS.

7. DHS will not reimburse any Web Services Employer or software developer who has expended resources in the development or maintenance of a Web Services interface if that party is unable, or becomes unable, to meet any of the requirements set forth in this MOU.

8. Housing, development, infrastructure, maintenance, and testing of the Web Services applications may take place outside the United States and its territories, but testing must be conducted to ensure that the code is correct and secure.

9. Tf the Web Services Employer includes an electronic Form I-9 as part of its interface, then it must comply with the standards for electronic retention of Form I-9 found in 8 CFR 274a.2(e).

B. INFORMATION SECURITY REQUIREMENTS

Web Services Employers performing verification services under this MOU must ensure that information that is shared between the Web Services Employer and DHS is appropriately protected comparable to the protection provided when the information is within the DHS environment [OMB Circular A-130 Appendix III].

To achieve this level of information security, the Web Services Employer agrees to institute the following procedures:

1. Conduct periodic assessments of risk, including the magnitude of harm that could result from the unauthorized access, use, disclosure, disruption, modification, or destruction of information and information systems that support the operations and assets of the DHS, SSA, and the Web Services Employer;

2. Develop policies and procedures that are based on risk assessments, cost-effectively reduce information security risks to an acceptable level, and ensure that information security is addressed throughout the life cycle of each organizational information system;

3. Implement subordinate plans for providing adequate information security for networks, facilities, information systems, or groups of information systems, as appropriate;

4. Conduct security awareness training to inform the Web Services Employer's personnel (including contractors and other users of information systems that support the operations and assets of the organization) of the information security risks associated with their activities and their responsibilities in complying with organizational policies and procedures designed to reduce these risks;

5. Develop periodic testing and evaluation of the effectiveness of information security policies, procedures, practices, and security controls to be performed with a frequency depending on risk, but no less than once per year;

6. Develop a process for planning, implementing, evaluating, and documenting remedial actions to address any deficiencies in the information security policies, procedures, and practices of the organization;

7. Implement procedures for detecting, reporting, and responding to security incidents;

8. Create plans and procedures to ensure continuity of operations for information systems that support the operations and assets of the organization;

9. In information-sharing environments, the information owner is responsible for establishing the rules for appropriate use and protection of the subject information and retains that responsibility even when the information is shared with or provided to other organizations [NIST SP 800-37].

10. DHS reserves the right to restrict Web Services calls from certain IP addresses.

11. DHS reserves the right to audit the Web Services Employer's application.

12. Web Services Employers agree to cooperate willingly with the DHS assessment of information security and privacy practices used by the company to develop and maintain the software.

C. DATA PROTECTION AND PRIVACY REQUIREMENTS

1. Web Services Employers must practice proper Internet security; this means using HTTP over SSL/TLS (also known as HTTPS) when accessing DHS information resources such as E-Verify [NIST SP 800-95]. Internet security practices like this are necessary because Simple Object Access Protocol (SOAP), which provides a basic messaging framework on which Web Services can be built, allows messages to be viewed or modified by attackers as messages traverse the Internet and is not independently designed with all the necessary security protocols for E-Verify use.

2. In accordance with DHS standards, the Web Services Employer agrees to maintain physical, electronic, and procedural safeguards to appropriately protect the information shared under this MOU

against loss, theft, misuse, unauthorized access, and improper disclosure, copying use, modification or deletion.

3. Any data transmission requiring encryption shall comply with the following standards:

- Products using FIPS 197 Advanced Encryption Standard (AES) algorithms with at least 256-bit encryption that has been validated under FIPS 140-2.
- NSA Type 2 or Type 1 encryption.

4. User ID Management (Set Standard): All information exchanged between the parties under this MOU will be done only through authorized Web Services Employer representatives identified above.

5. The Web Services Employer agrees to use the E-Verify browser instead of its own interface if it has not yet upgraded its interface to comply with the Federal Acquisition Regulation (FAR) system changes. In addition, Web Services Employers whose interfaces do not support the Form I-9 from 2/2/2009 or 8/7/2009 agree to use the E-Verify browser until the system upgrade is completed.

6. The Web Services Employer agrees to use the E-Verify browser instead of its own interface if it has not completed updates to its system to the satisfaction of DHS or its assignees within six months from the date DHS notifies the Web Services Employer of the system update. The Web Services Employer can resume use of its interface once it is up-to-date, unless the Web Services Employer has been suspended or terminated from continued use of the system.

D. COMMUNICATIONS

1. The Web Services Employer agrees to develop an electronic system that is not subject to any agreement or other requirement that would restrict access and use by an agency of the United States.

2. The Web Services Employer agrees to develop effective controls to ensure the integrity, accuracy and reliability of its electronic system.

3. The Web Services Employer agrees to develop an inspection and quality assurance program that regularly (at least once per year) evaluates the electronic system, and includes periodic checks of electronically stored information. The Web Services Employer agrees to share the results of its regular inspection and quality assurance program with DHS upon request.

4. The Web Services Employer agrees to develop an electronic system with the ability to produce legible copies of applicable notices, letters, and other written, photographic and graphic materials.

5. All information exchanged between the parties under this MOU will be in accordance with applicable laws, regulations, and policies, including but not limited to, information security guidelines of the sending party with respect to any information that is deemed Personally Identifiable Information (PII), including but not limited to the employee or applicant's Social Security number, alien number, date of birth, or other information that may be used to identify the individual.

6. Suspected and confirmed information security breaches must be reported to DHS according to Article V.C.1. Reporting such breaches does not relieve the Web Services Employer from further

requirements as directed by state and local law. The Web Services Employer is subject to applicable state laws regarding data protection and incident reporting in addition to the requirements herein.

E. SOFTWARE DEVELOPMENT RESTRICTIONS

1. DHS reserves the right to terminate the access of any software developer with or without notice who creates or uses an interface that does not comply with E-Verify procedures.

2. Employers are prohibited from Web Services Software development unless they also create cases in E-Verify to verify their new hires' work authorization. Those pursuing software development without intending to use E-Verify are not eligible to receive an ICA. At this time, E-Verify does not permit Web Services software development without also being a Web Services Employer or Web Services E-Verify Employer Agent.

F. PENALTIES

1. The Web Services Employer agrees that any failure on its part to comply with the terms of the MOU may result in account suspension, termination, or other adverse action.

2. DHS is not liable for any financial losses to Web Services Employer, its clients, or any other party as a result of account suspension or termination.

ARTICLE VI
MODIFICATION AND TERMINATION

A. MODIFICATION

1. This MOU is effective upon the signature of all parties and shall continue in effect for as long as the SSA and DHS operates the E-Verify program unless modified in writing by the mutual consent of all parties.

2. Any and all E-Verify system enhancements by DHS or SSA, including but not limited to E-Verify checking against additional data sources and instituting new verification policies or procedures, will be covered under this MOU and will not cause the need for a supplemental MOU that outlines these changes.

B. TERMINATION

1. The Web Services Employer may terminate this MOU and its participation in E-Verify at any time upon 30 days prior written notice to the other parties.

2. Notwithstanding Article V, part A of this MOU, DHS may terminate this MOU, and thereby the Web Services Employer's participation in E-Verify, with or without notice at any time if deemed necessary because of the requirements of law or policy, or upon a determination by SSA or DHS that there has been a breach of system integrity or security by the Web Services Employer, or a failure on the part of either party to comply with established E-Verify procedures and/or legal requirements. The Web Services Employer understands that if it is a Federal contractor, termination of this MOU by any party for any reason may negatively affect

the performance of its contractual responsibilities. Similarly, the Web Services Employer understands that if it is in a state where E-Verify is mandatory, termination of this by any party MOU may negatively affect the Web Services Employer's business.

3. A Web Services Employer that is a Federal contractor may terminate this MOU when the Federal contract that requires its participation in E-Verify is terminated or completed. In such cases, the Web Services Employer must provide written notice to DHS. If the Web Services Employer fails to provide such notice, then that Web Services Employer will remain an E-Verify participant, will remain bound by the terms of this MOU that apply to non-Federal contractor participants, and will be required to use the E-Verify procedures to verify the employment eligibility of all newly hired employees.

4. The Web Services Employer agrees that E-Verify is not liable for any losses, financial or otherwise, if the Web Services Employer or the Employer is terminated from E-Verify.

ARTICLE VII
PARTIES

A. Some or all SSA and DHS responsibilities under this MOU may be performed by contractor(s), and SSA and DHS may adjust verification responsibilities between each other as necessary. By separate agreement with DHS, SSA has agreed to perform its responsibilities as described in this MOU.

B. Nothing in this MOU is intended, or should be construed, to create any right or benefit, substantive or procedural, enforceable at law by any third party against the United States, its agencies, officers, or employees, or against the Web Services Employer, its agents, officers, or employees.

C. The Web Services Employer may not assign, directly or indirectly, whether by operation of law, change of control or merger, all or any part of its rights or obligations under this MOU without the prior written consent of DHS, which consent shall not be unreasonably withheld or delayed. Any attempt to sublicense, assign, or transfer any of the rights, duties, or obligations herein is void.

D. Each party shall be solely responsible for defending any claim or action against it arising out of or related to E-Verify or this MOU, whether civil or criminal, and for any liability wherefrom, including (but not limited to) any dispute between the Web Services Employer and any other person or entity regarding the applicability of Section 403(d) of IIRIRA to any action taken or allegedly taken by the Web Services Employer.

E. The Web Services Employer understands that its participation in E-Verify is not confidential information and may be disclosed as authorized or required by law and DHS or SSA policy, including but not limited to, Congressional oversight, E-Verify publicity and media inquiries, determinations of compliance with Federal contractual requirements, and responses to inquiries under the Freedom of Information Act (FOIA).

F. The individuals whose signatures appear below represent that they are authorized to enter into this MOU on behalf of the Web Services Employer and DHS respectively. The Web Services Employer understands that any inaccurate statement, representation, data or other information provided to DHS may subject the Web Services Employer,

its subcontractors, its employees, or its representatives to: (1) prosecution for false statements pursuant to 18 U.S.C. 1001 and/or; (2) immediate termination of its MOU and/or; (3) possible debarment or suspension.

G. The foregoing constitutes the full agreement on this subject between DHS and the Web Services Employer.

Approved by:

Web Services Employer MGT Impact Solutions, LLC	
Name (Please Type or Print) MARLEE JAMES	Title
Signature Electronically Signed	Date 05/03/2022
Department of Homeland Security – Verification Division	
Name (Please Type or Print) USCIS Verification Division	Title
Signature Electronically Signed	Date 05/03/2022

Company ID Number: 1829413

Information Required for the E-Verify Program	
Information relating to your Company:	
Company Name	MGT Impact Solutions, LLC
Company Facility Address	4320 W Kennedy Blvd Tampa, FL 33609
Company Alternate Address	
County or Parish	HILLSBOROUGH
Employer Identification Number	810890071
North American Industry Classification Systems Code	541
Parent Company	
Number of Employees	500 to 999
Number of Sites Verified for	1 site(s)

Company ID Number: 1829413

Are you verifying for more than 1 site? If yes, please provide the number of sites verified for in each State:

FL	1

Company ID Number: 1829413

Information relating to the Program Administrator(s) for your Company on policy questions or operational problems:

Name	Swathi Susarapu
Phone Number	7707095722
Fax	
Email	Ssusarapu@cirainfotech.com

Name	Adriana Lema Polo
Phone Number	8132707893
Fax	
Email	alemapolo@mgtconsulting.com

Name	MARLEE JAMES
Phone Number	2196780383
Fax	
Email	mjames@mgtconsulting.com

Company ID Number: 1829413

This list represents the first 20 Program Administrators listed for this company.

AGENDA ITEM SUMMARY SHEET

Agenda of: July 7, 2026

Submitted by:
Ricardo Woods, City Attorney

Sponsored by:
Spiro Cheriogotis, Mayor

Purpose and Scope of Project:
Authorize Mayor to execute Settlement Agreement and Mutual Release with Chris Brewer Contracting, Inc.

Amount of Contract:

Funding Source

ATTACHMENTS:
1. Resolution.Settlement Chris Brewer Contract for City

REVIEWERS:
Patricia Primm
Cherlina Monteiro
James Barber

RES O L U T I O N

Sponsored by: Mayor Spiro N. Cheriogotis

BE IT RESOLVED by the City Council of the City of Mobile, that the Mayor and the City Clerk be, and they hereby are, authorized to execute for and on behalf of the City of Mobile, the Settlement Agreement and Mutual Release between Chris Brewer Contracting, Inc. and the City of Mobile. A copy of said Agreement is on file in the office of the City Clerk.

Adopted:

_____
City Clerk